Jade chip

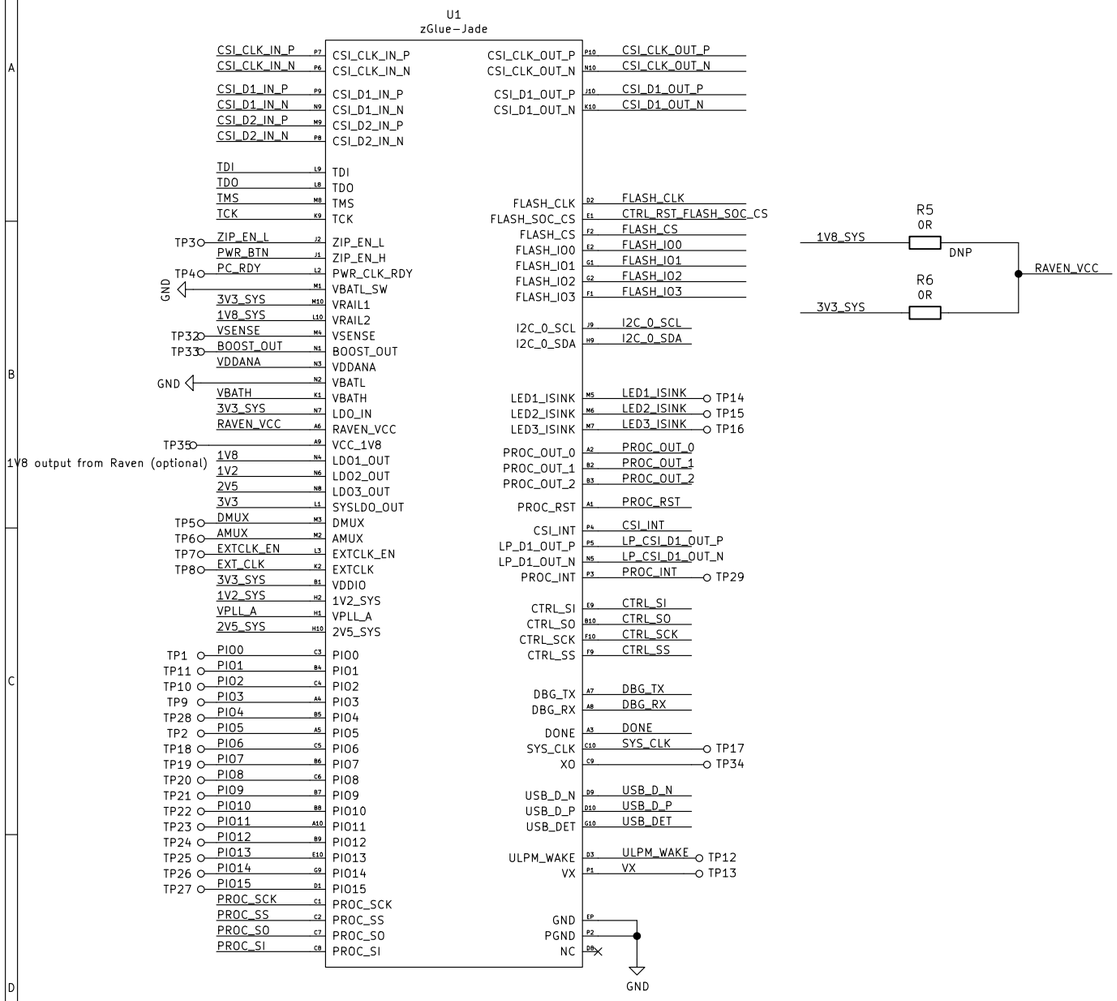

Baseboard connectors

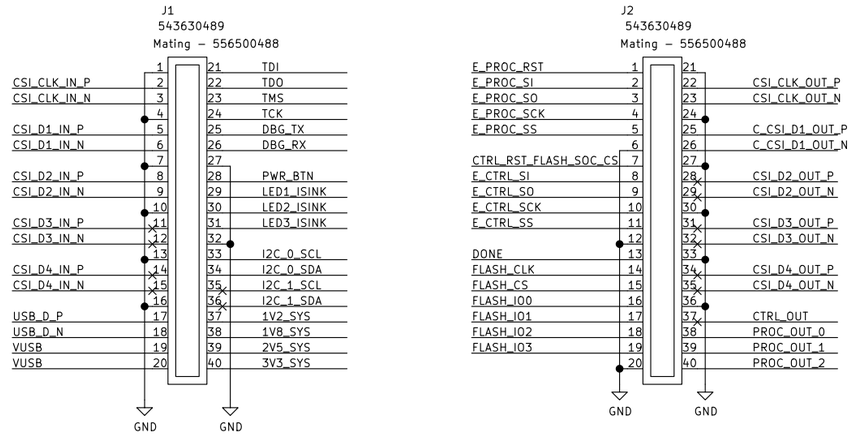

Debug resistors

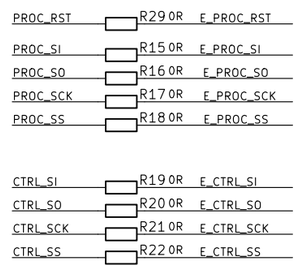

MIPI output

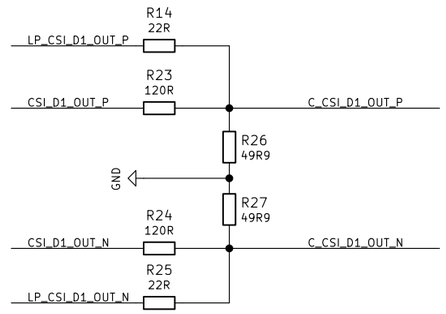

Voltage filtering

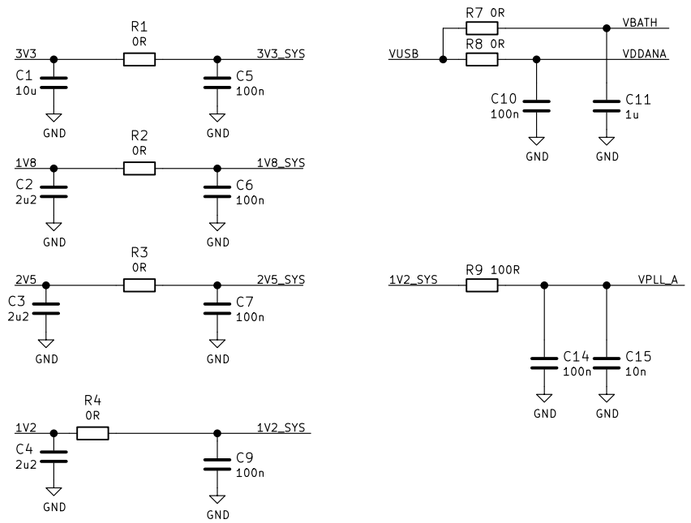

USB pullup

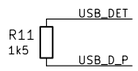

MIPI termination

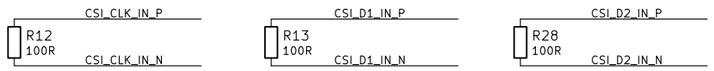

CSI INT

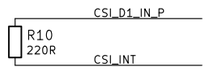

www.antmicro.com
Antmicro

Sheet: /
File: zglue-jade-adapter.sch

Title: zGlue Jade Adapter

Size: A3	Date:	**Rev: 1.0**
KiCad E.D.A. kicad 5.0.2+dfsg1-1bpo9+1		Id: 1/1