GPU Cluster Backplane

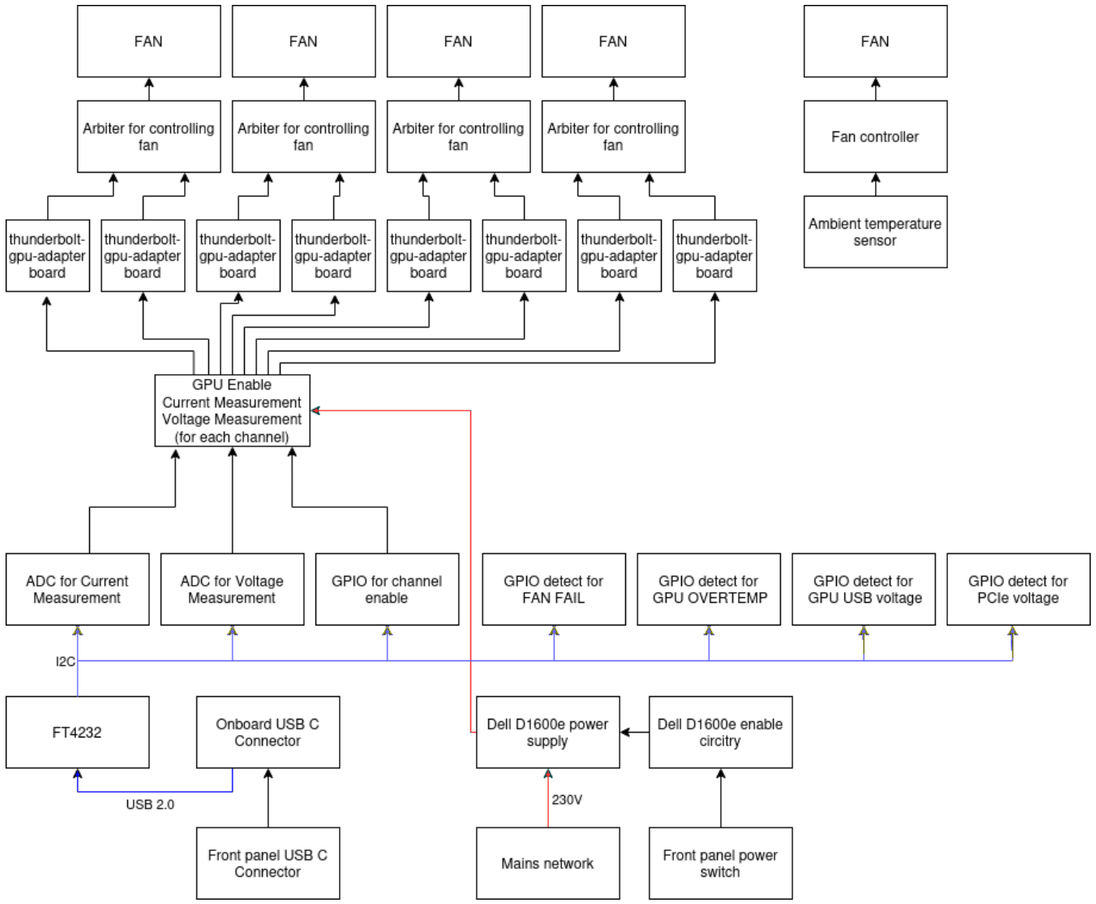

Connectors

File: connectors.kicad_sch

Output control and data acquisition

File: output-control.kicad_sch

Fans control

File: fans-control.kicad_sch

Debug signals

File: debug-signals.kicad_sch

FTDI and power

File: ftdi-module.kicad_sch

Mechanical

File: mechanical.kicad_sch

antmicro

open source hardware

Logo N1 antmicro_logo

Logo N2 oshw_logo

www.antmicro.com

Antmicro Ltd

Sheet: /

File: gpu-cluster-backplane.kicad_sch

Title: GPU Cluster Backplane

Size: A3	Date: 2023-11-09	**Rev: 1.0.0**
KiCad E.D.A. eeschema 6.0.11+dfsg-1~bpo11+1		Id: 1/15

FTDI

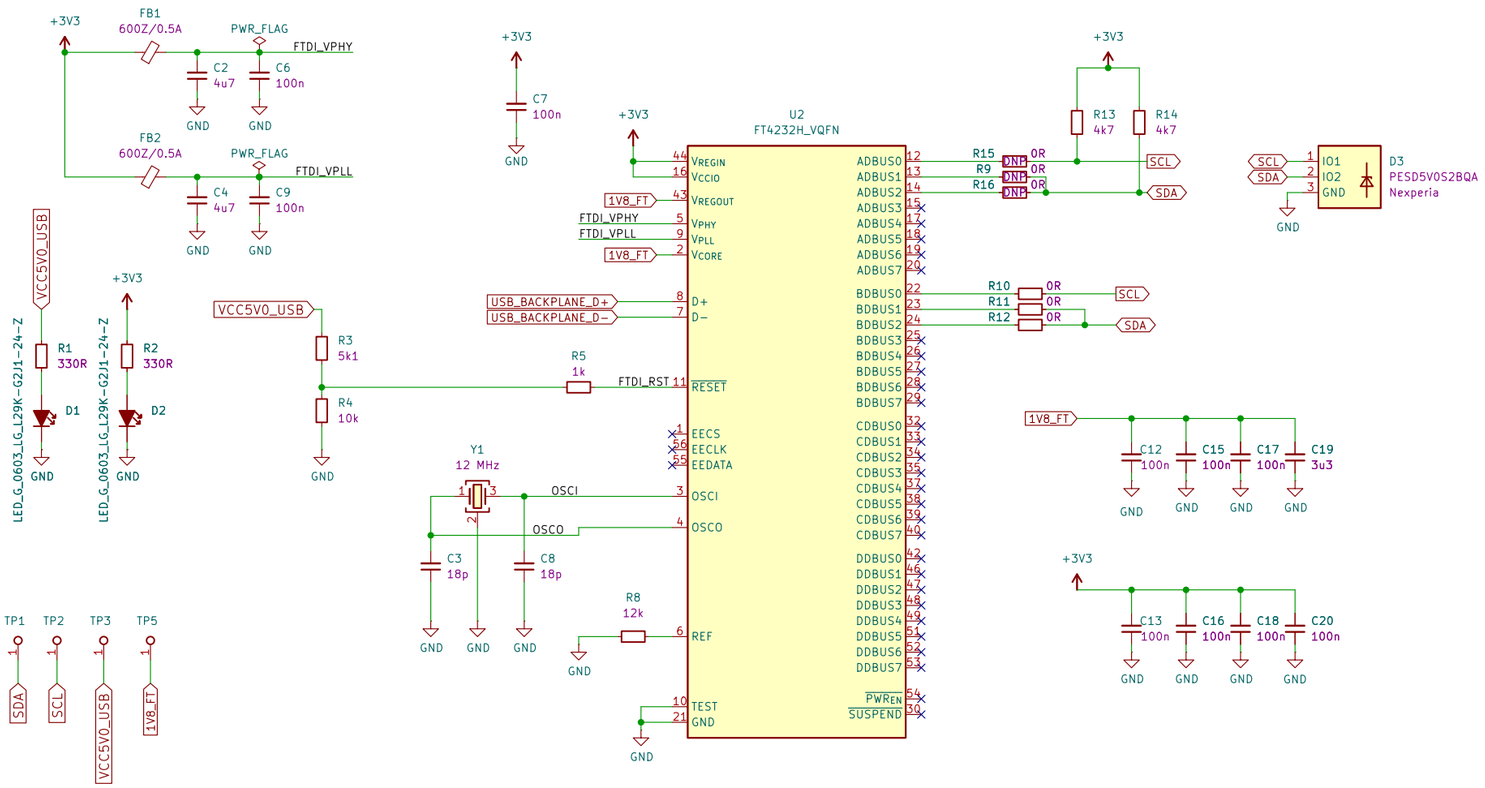

5V0 DC/DC Converter

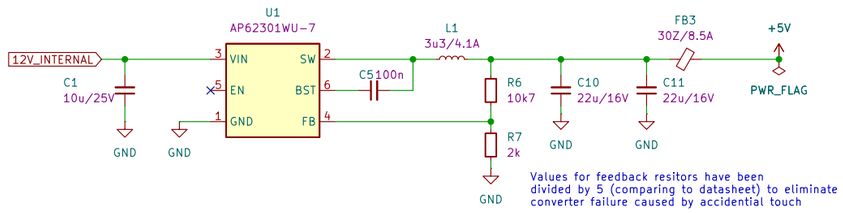

3V3 DC/DC Converter

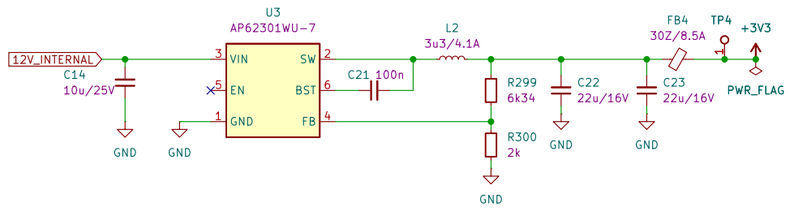

antmicro

open source hardware

www.antmicro.com
Antmicro Ltd

Sheet: /FTDI and power/
File: ftdi-module.kicad_sch

Title: GPU Cluster Backplane

Size: A3	Date: 2023-11-09	**Rev: 1.0.0**
KiCad E.D.A. eeschema 6.0.11+dfsg-1~bpo11+1		Id: 2/15

Channel high side switch

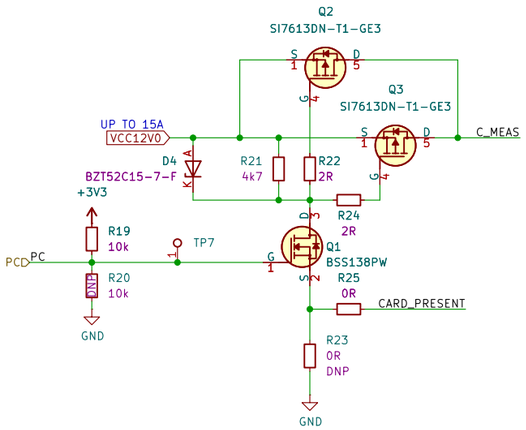

Current and voltage measurement

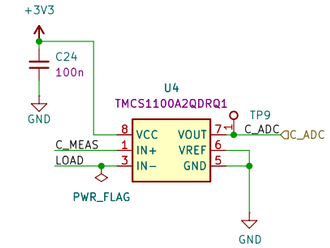

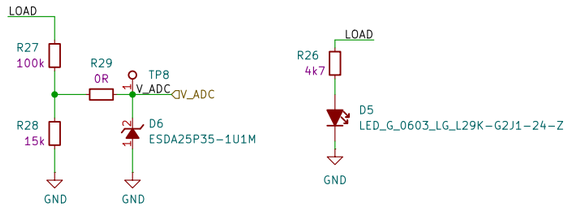

GPU Adapter connector

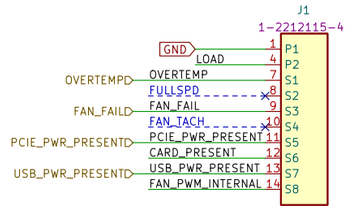

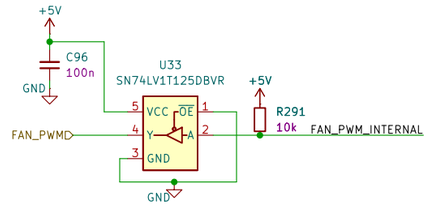

www.antmicro.com
Antmicro Ltd

Sheet: /Output control and data acquisition/GPU-output/
File: GPU-output.kicad_sch

Title: GPU Cluster Backplane

Size: A3	Date: 2023-11-09	**Rev: 1.0.0**
KiCad E.D.A. eeschema 6.0.11+dfsg-1~bpo11+1		Id: 3/15

antmicro

open source hardware

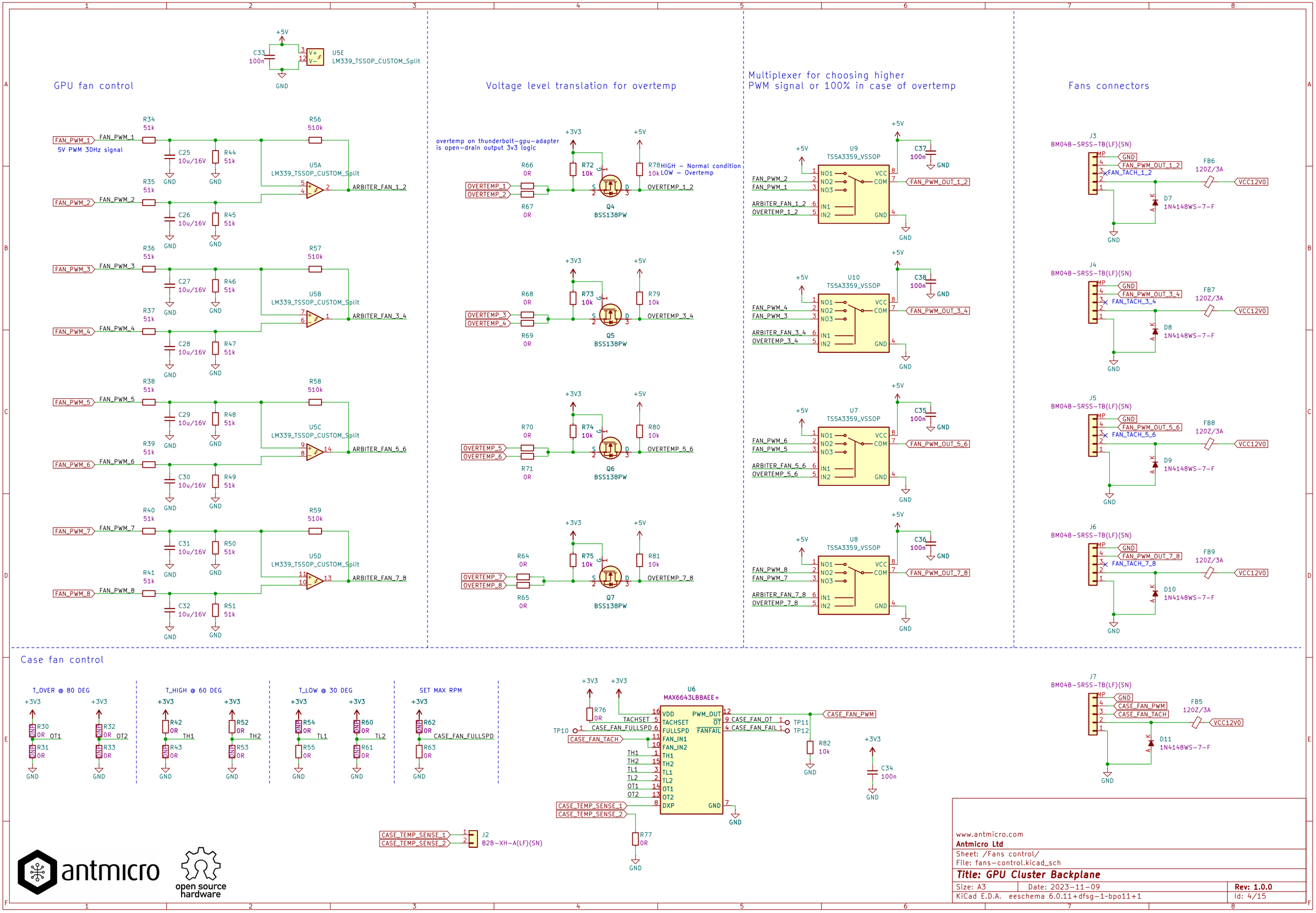

www.antmicro.com
Antmicro Ltd
Sheet: /Fans control/
File: fans-control.kicad_sch

Title: GPU Cluster Backplane

Size: A3	Date: 2023-11-09	**Rev: 1.0.0**
KiCad E.D.A. eeschema 6.0.11+dfsg-1~bpo11+1		Id: 4/15

Holes for studs

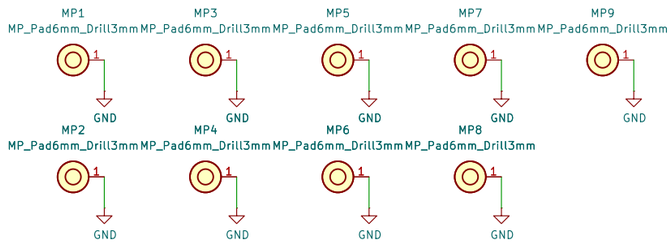

www.antmicro.com
Antmicro Ltd
Sheet: /Mechanical/
File: mechanical.kicad_sch

Title: GPU Cluster Backplane

Size: A3	Date: 2023-11-09	**Rev: 1.0.0**
KiCad E.D.A. eeschema 6.0.11+dfsg-1~bpo11+1		Id: 5/15

Dell D1600e PSU connector

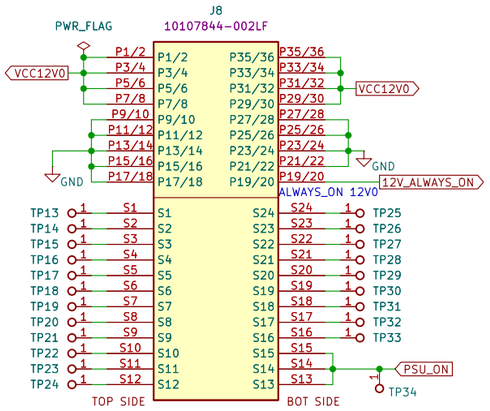

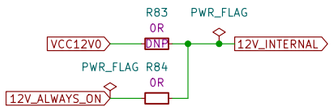

need to validate this during bringup
as we don't know current capabilities
of the 12V always on output

Power switch connector

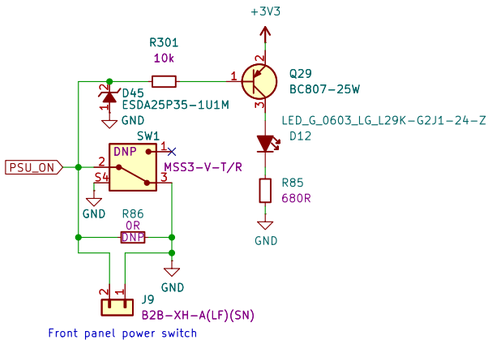

USB C connector

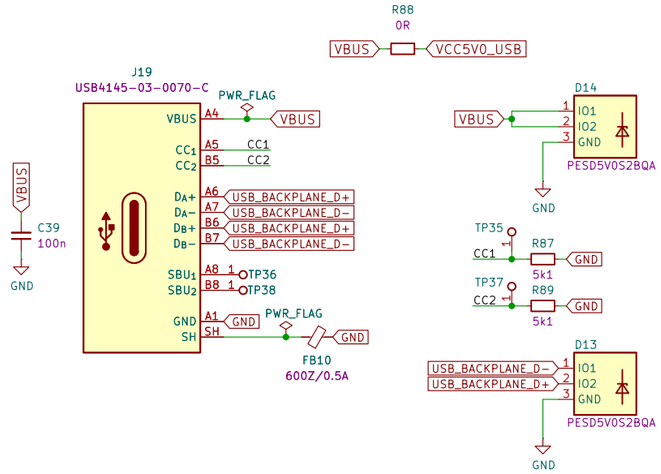

www.antmicro.com
Antmicro Ltd
Sheet: /Connectors/
File: connectors.kicad_sch

Title: GPU Cluster Backplane

Size: A3	Date: 2023-11-09	**Rev: 1.0.0**
KiCad E.D.A. eeschema 6.0.11+dfsg-1~bpo11+1		Id: 8/15

antmicro

open source hardware

GPIO EXPANDER for OVERTEMP

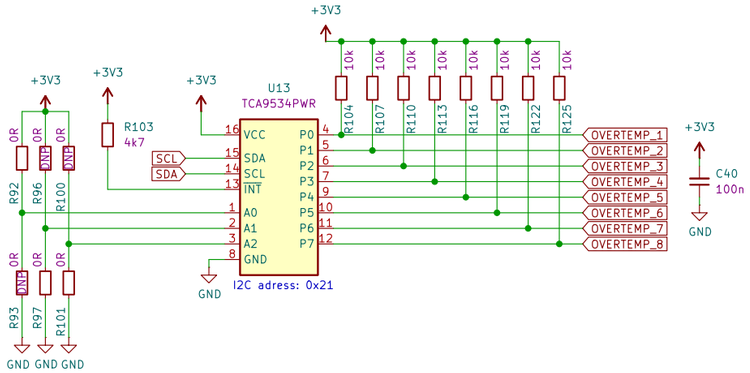

GPIO EXPANDER for FAN_FAIL

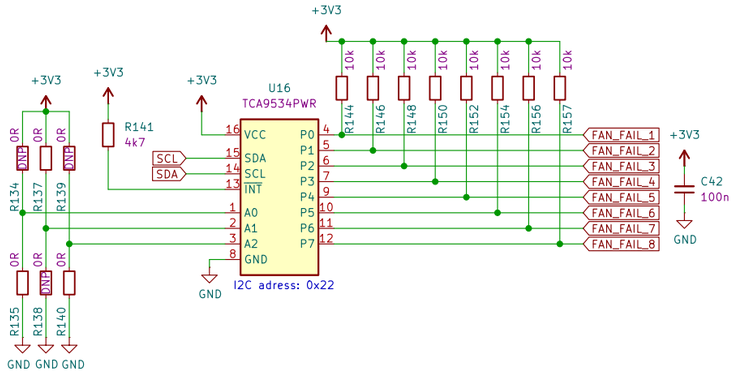

GPIO EXPANDER for USB_PWR_PRESENT

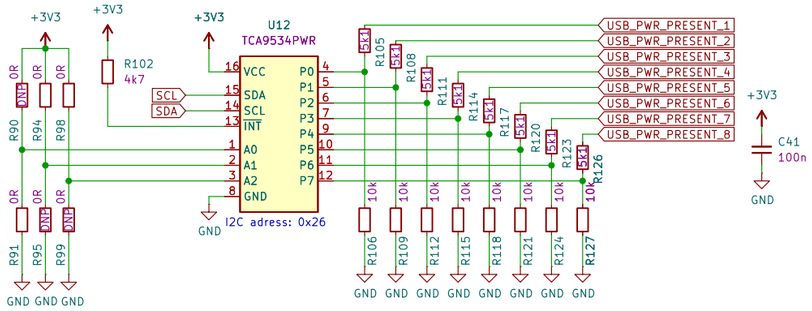

GPIO EXPANDER for PCIE_PWR_PRESENT

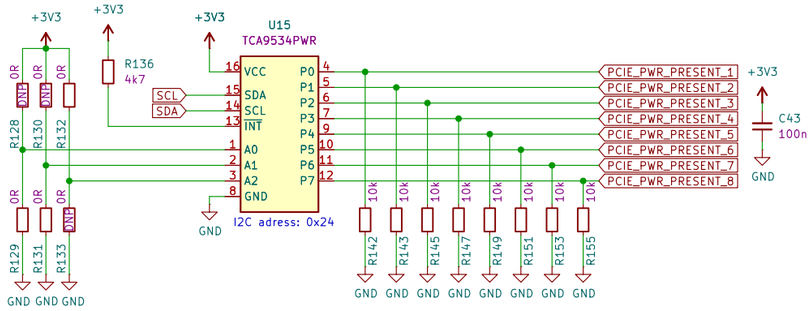

Temperature and humidity sensor

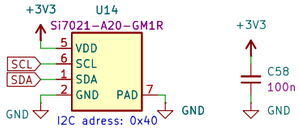

antmicro

open source hardware

www.antmicro.com
Antmicro Ltd
Sheet: /Debug signals/
File: debug-signals.kicad_sch

Title: GPU Cluster Backplane

Size: A3	Date: 2023-11-09	**Rev: 1.0.0**
KiCad E.D.A. eeschema 6.0.11+dfsg-1~bpo11+1		Id: 8/15

Channel high side switch

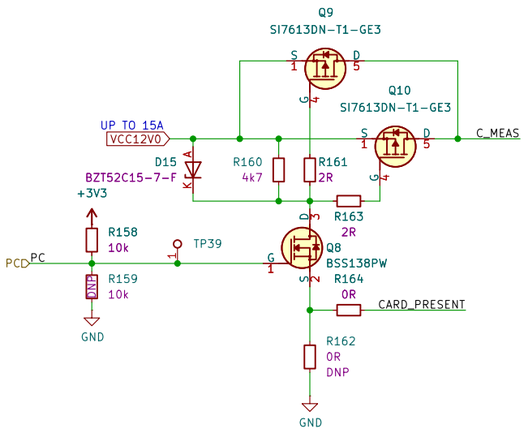

Current and voltage measurement

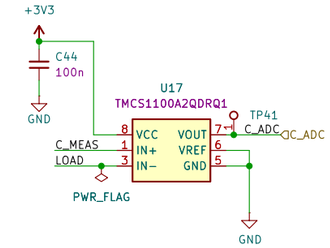

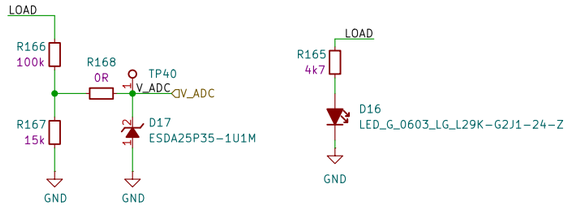

GPU Adapter connector

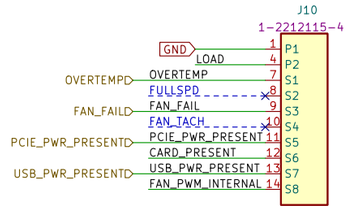

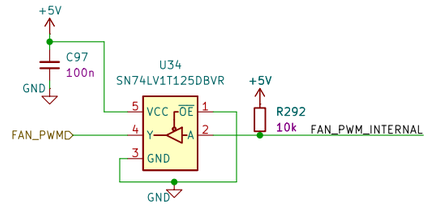

www.antmicro.com
Antmicro Ltd

Sheet: /Output control and data acquisition/GPU-output1/
File: GPU-output.kicad_sch

Title: GPU Cluster Backplane

Size: A3	Date: 2023-11-09	**Rev: 1.0.0**
KiCad E.D.A. eeschema 6.0.11+dfsg-1~bpo11+1		Id: 10/15

antmicro

open source hardware

Invidual channels for connecting thunderbolt-gpu-adapters

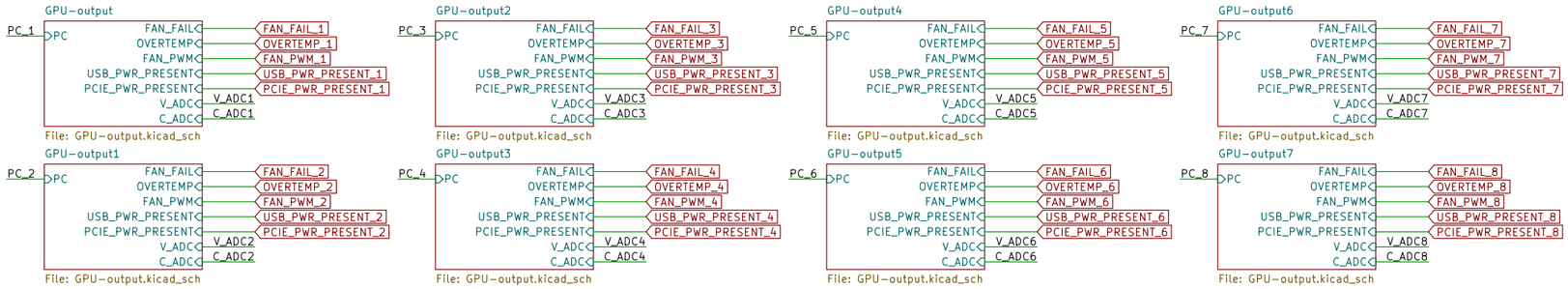

GPIO EXPANDER for power cycling

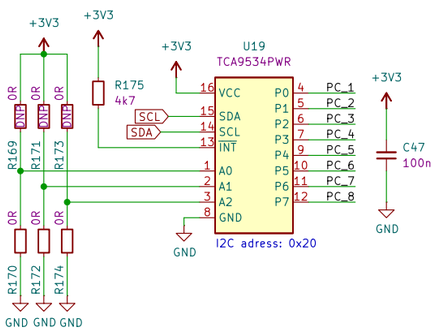

ADC for current measurement

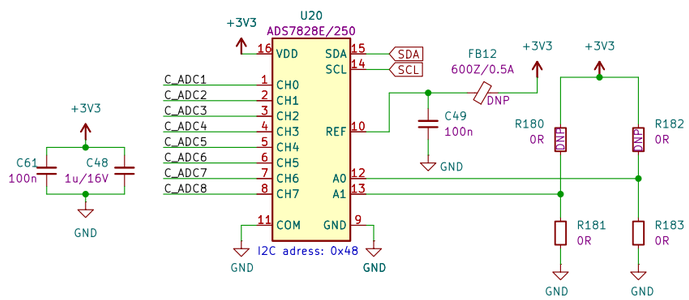

ADC for voltage measurement

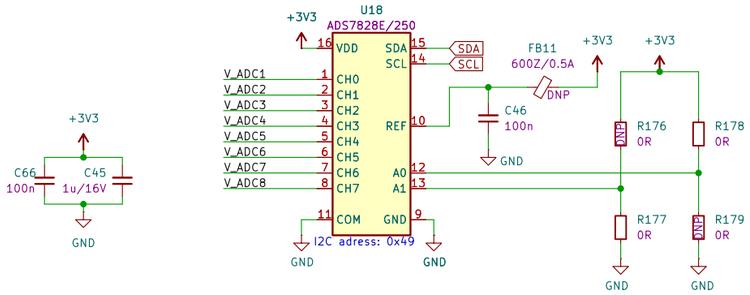

antmicro

open source hardware

www.antmicro.com
Antmicro Ltd
Sheet: /Output control and data acquisition/
File: output-control.kicad_sch

Title: GPU Cluster Backplane

Size: A3	Date: 2023-11-09	**Rev: 1.0.0**
KiCad E.D.A. eeschema 6.0.11+dfsg-1~bpo11+1		Id: 11/15

Channel high side switch

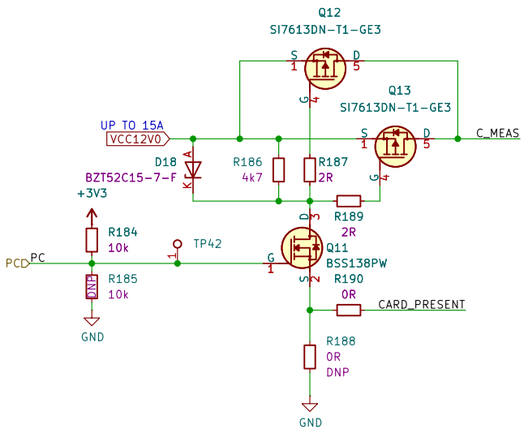

Current and voltage measurement

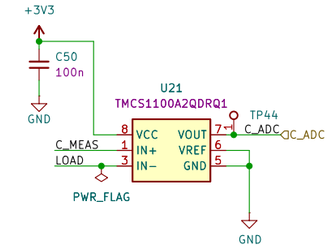

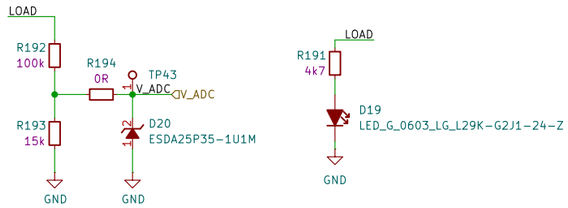

GPU Adapter connector

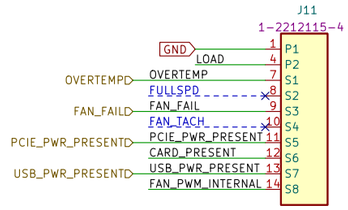

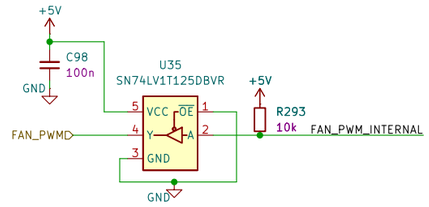

www.antmicro.com
Antmicro Ltd

Sheet: /Output control and data acquisition/GPU-output2/
File: GPU-output.kicad_sch

Title: GPU Cluster Backplane

Size: A3	Date: 2023-11-09	**Rev: 1.0.0**
KiCad E.D.A. eeschema 6.0.11+dfsg-1~bpo11+1		Id: 12/15

Channel high side switch

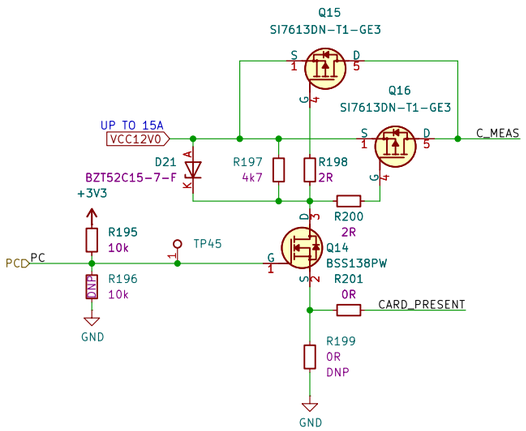

Current and voltage measurement

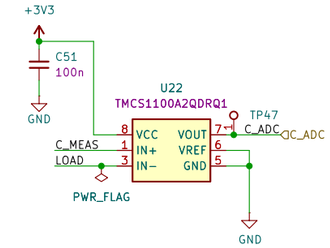

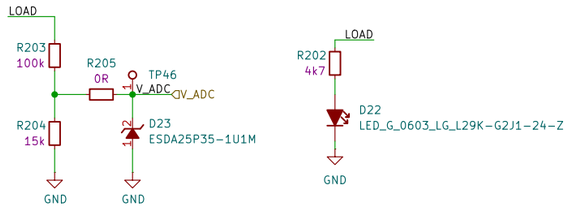

GPU Adapter connector

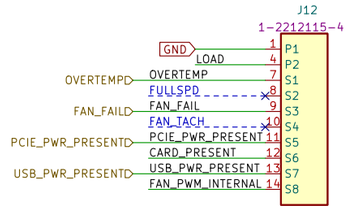

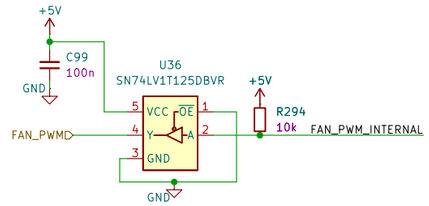

www.antmicro.com
Antmicro Ltd
Sheet: /Output control and data acquisition/GPU-output3/
File: GPU-output.kicad_sch

Title: GPU Cluster Backplane

Size: A3	Date: 2023-11-09	**Rev: 1.0.0**
KiCad E.D.A. eeschema 6.0.11+dfsg-1~bpo11+1		Id: 13/15

antmicro

open source hardware

Channel high side switch

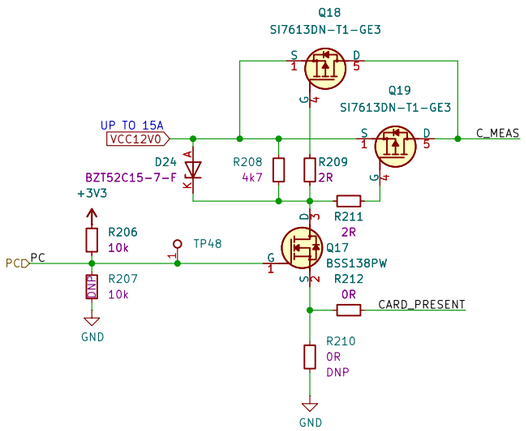

Current and voltage measurement

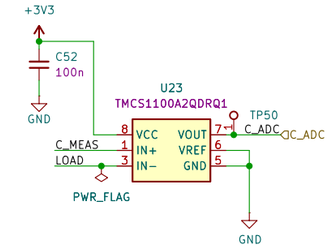

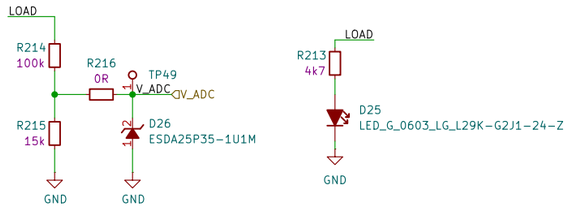

GPU Adapter connector

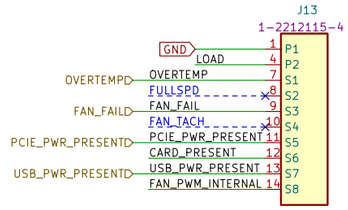

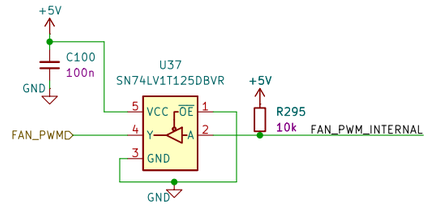

www.antmicro.com
Antmicro Ltd

Sheet: /Output control and data acquisition/GPU-output4/
File: GPU-output.kicad_sch

Title: GPU Cluster Backplane

Size: A3	Date: 2023-11-09	**Rev: 1.0.0**
KiCad E.D.A. eeschema 6.0.11+dfsg-1~bpo11+1		Id: 14/15

Channel high side switch

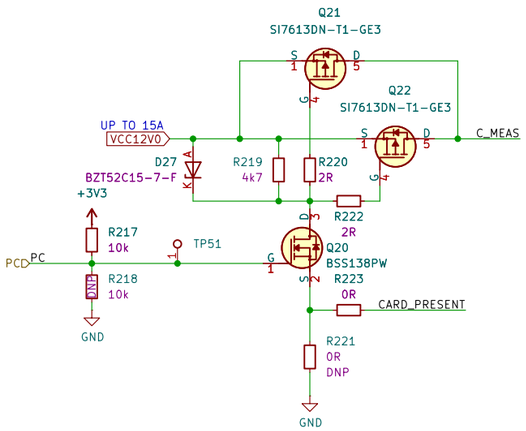

Current and voltage measurement

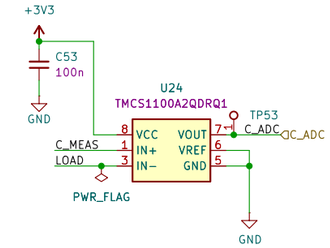

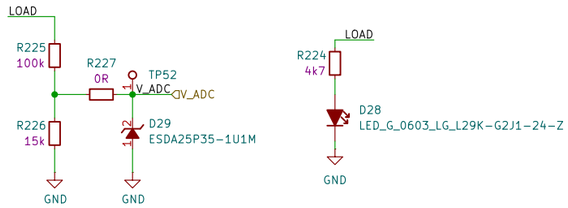

GPU Adapter connector

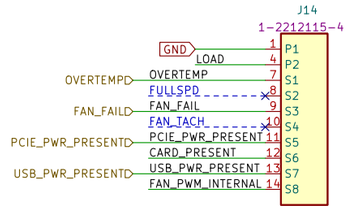

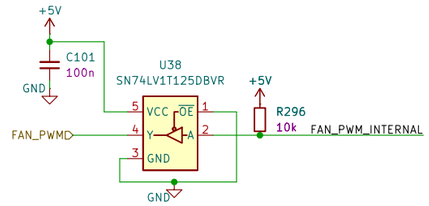

www.antmicro.com
Antmicro Ltd
Sheet: /Output control and data acquisition/GPU-output5/
File: GPU-output.kicad_sch

Title: GPU Cluster Backplane

Size: A3	Date: 2023-11-09	**Rev: 1.0.0**
KiCad E.D.A. eeschema 6.0.11+dfsg-1~bpo11+1		Id: 15/15

antmicro

open source hardware

Channel high side switch

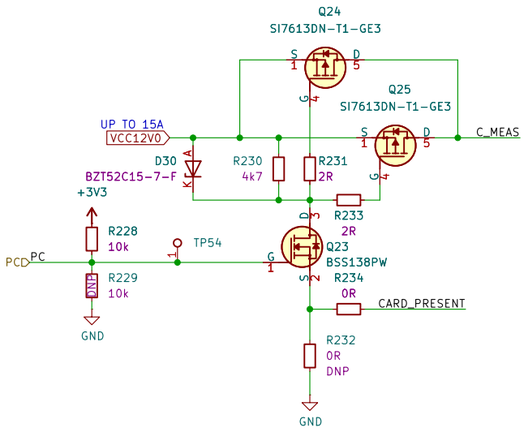

Current and voltage measurement

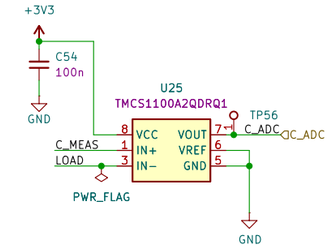

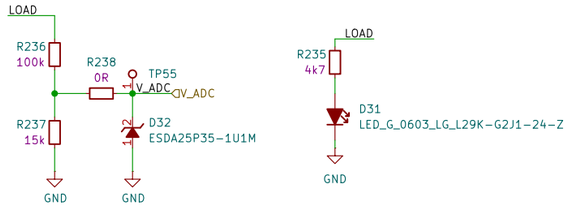

GPU Adapter connector

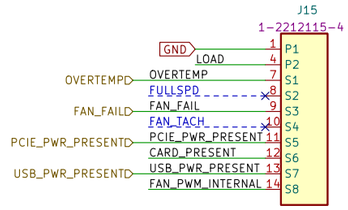

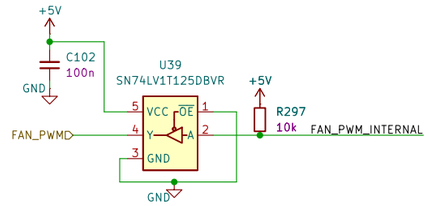

www.antmicro.com
Antmicro Ltd

Sheet: /Output control and data acquisition/GPU-output6/
File: GPU-output.kicad_sch

Title: GPU Cluster Backplane

Size: A3	Date: 2023-11-09	**Rev: 1.0.0**
KiCad E.D.A. eeschema 6.0.11+dfsg-1~bpo11+1		Id: 16/15

antmicro

open source hardware

Channel high side switch

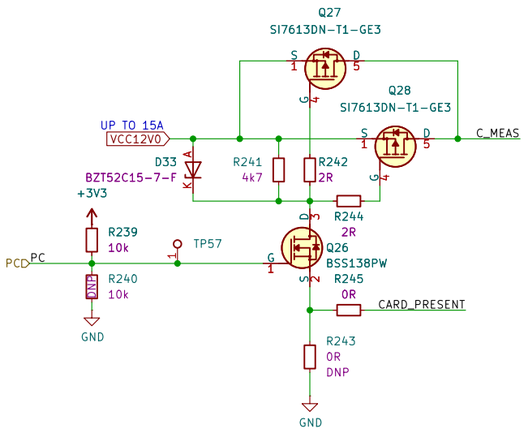

Current and voltage measurement

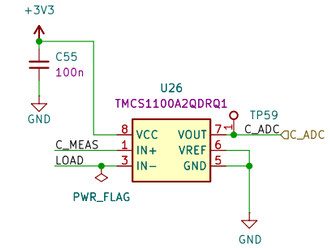

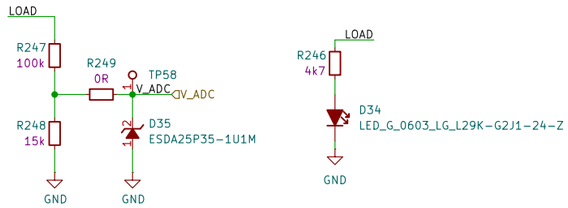

GPU Adapter connector

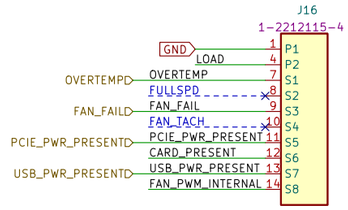

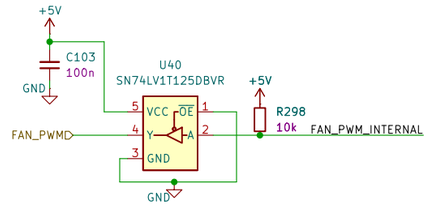

www.antmicro.com
Antmicro Ltd

Sheet: /Output control and data acquisition/GPU-output7/
File: GPU-output.kicad_sch

Title: GPU Cluster Backplane

Size: A3	Date: 2023-11-09	**Rev: 1.0.0**
KiCad E.D.A. eeschema 6.0.11+dfsg-1~bpo11+1		Id: 17/15

antmicro

open source hardware