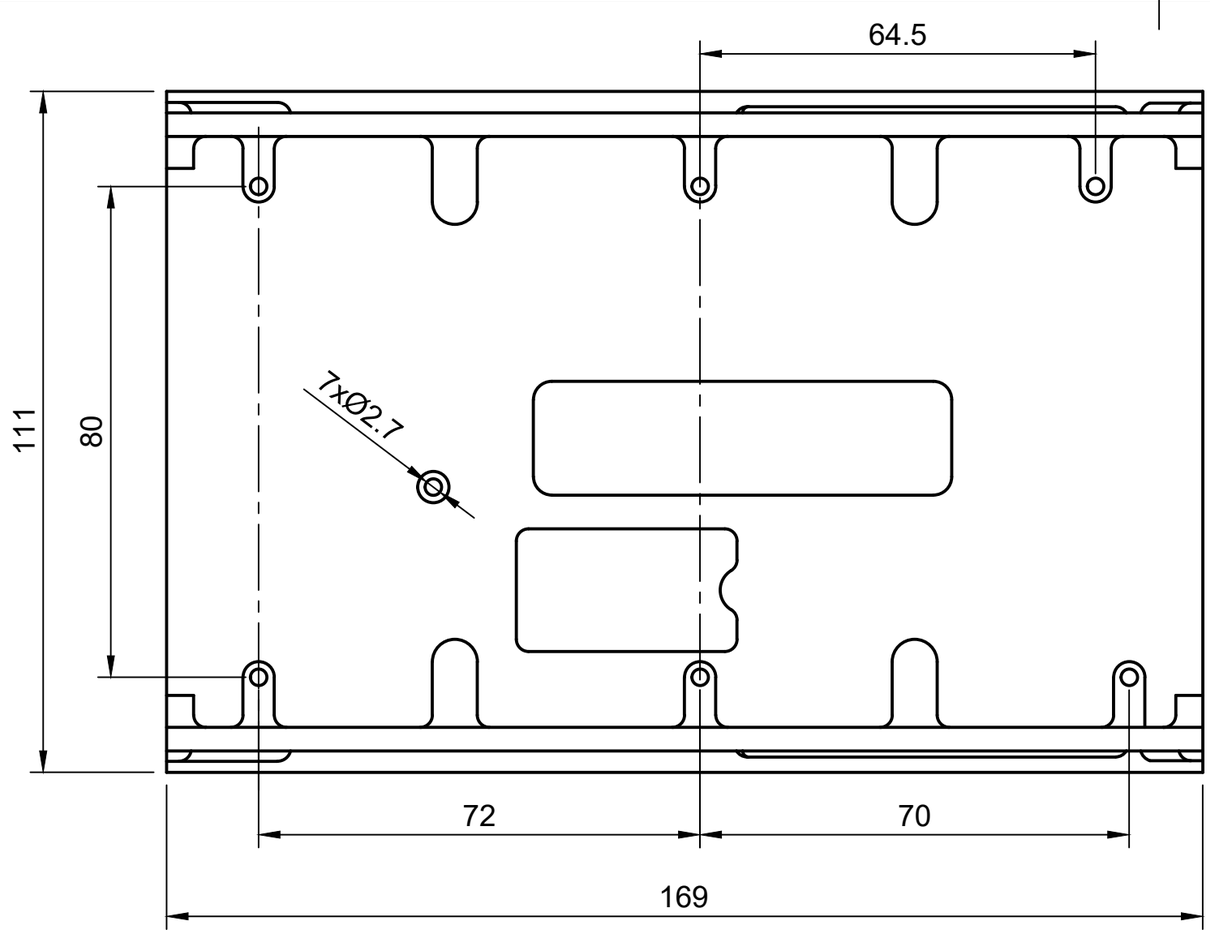

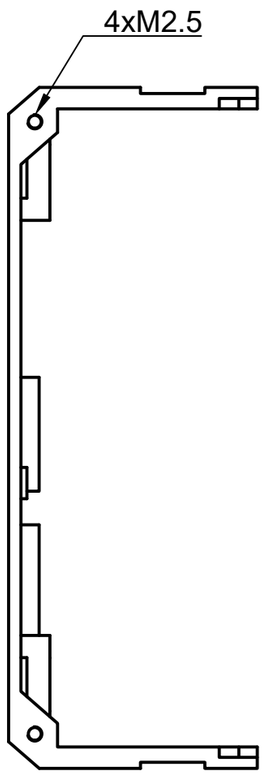

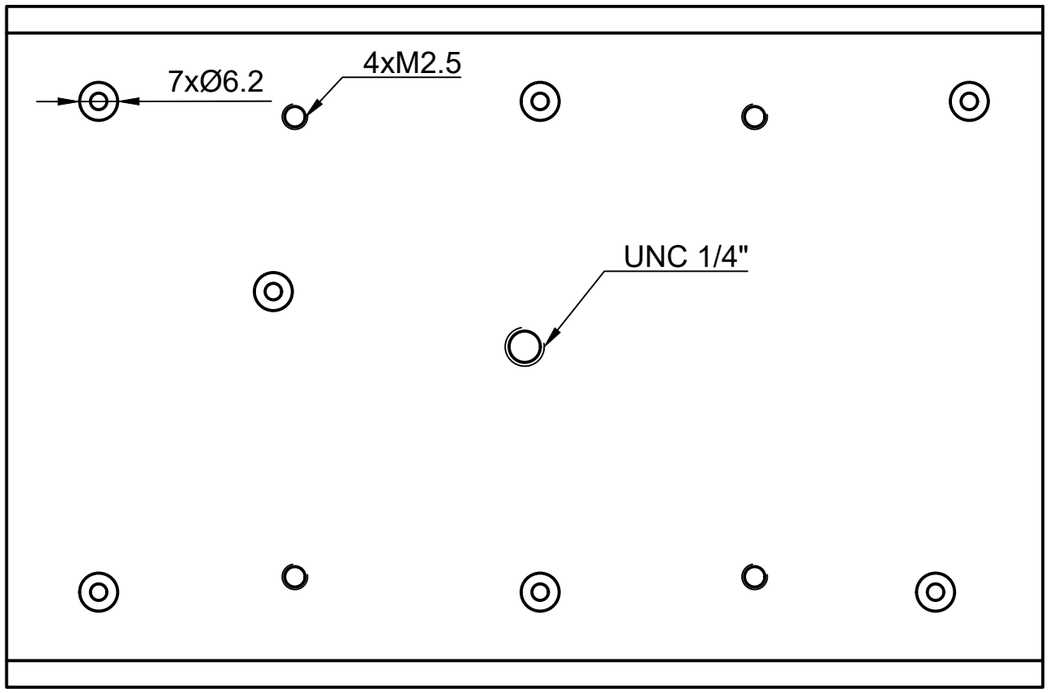

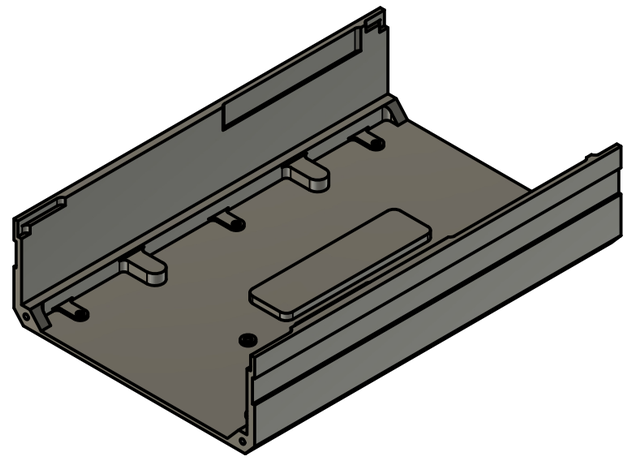

antmicro www.antmicro.com	Created by Antmicro	Date 30/03/2026
	Project Antmicro enclosure for Jetson AGX Thor	Document type Technical drawing
	Part name cnc_milled_bottom_shell_al	Reference design version v167
		Rev. 1.0 / Issue / Sheet 1/1