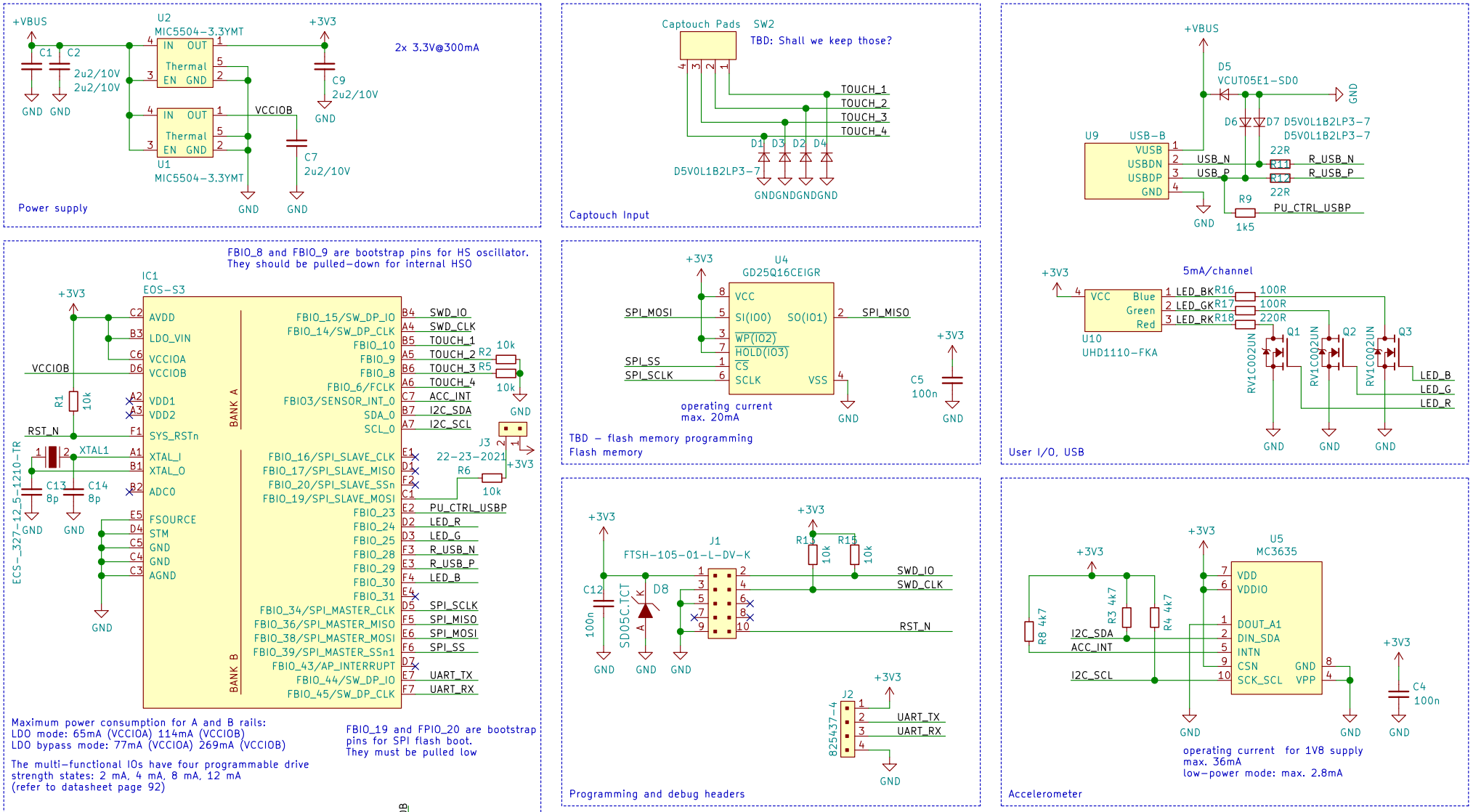

Antmicro Ltd. (www.antmicro.com)		
Sheet: /		
File: qomu-board.sch		
Title: Qomu Board		
Size: A4	Date:	Rev:
KiCad E.D.A. kicad 5.1.4-e60b26684ubuntu18.04.1		Id: 1/1