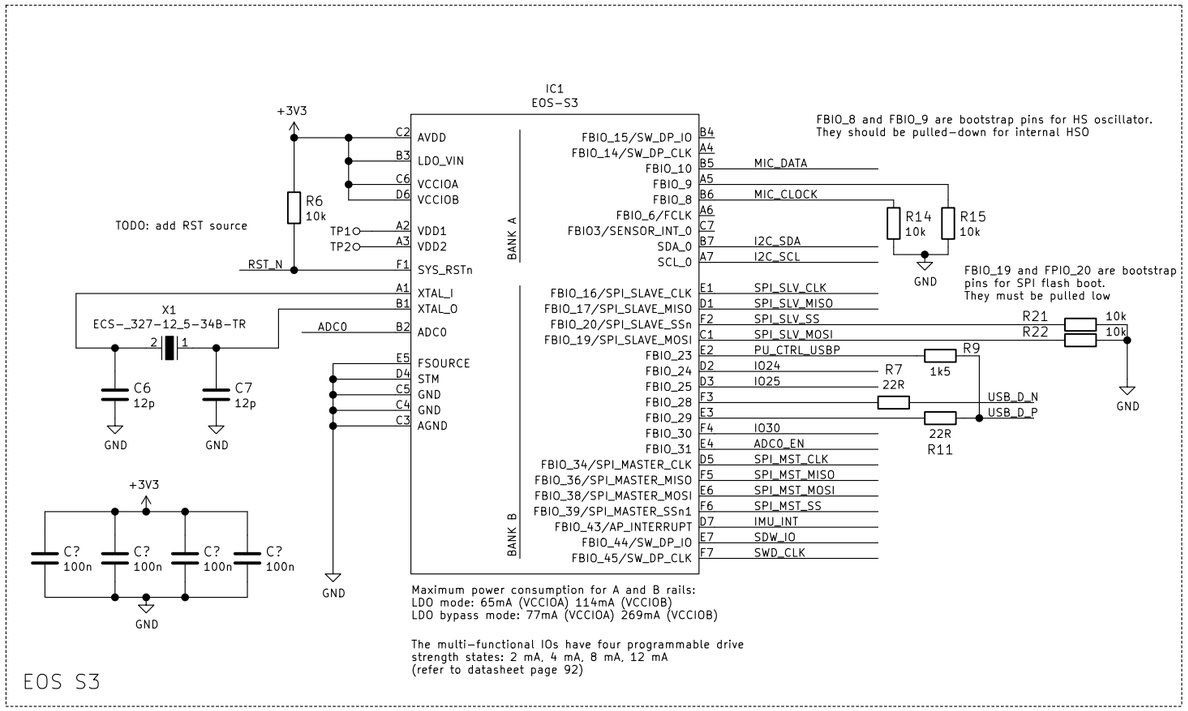

EOS S3

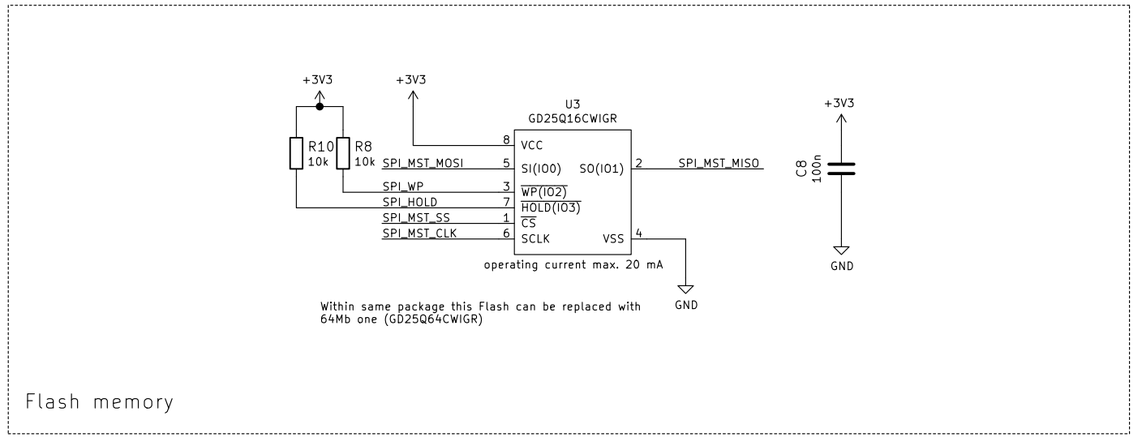

Flash memory

TODO add 1 reset button, add 1 user button and RGB LED

Buttons, LEDs

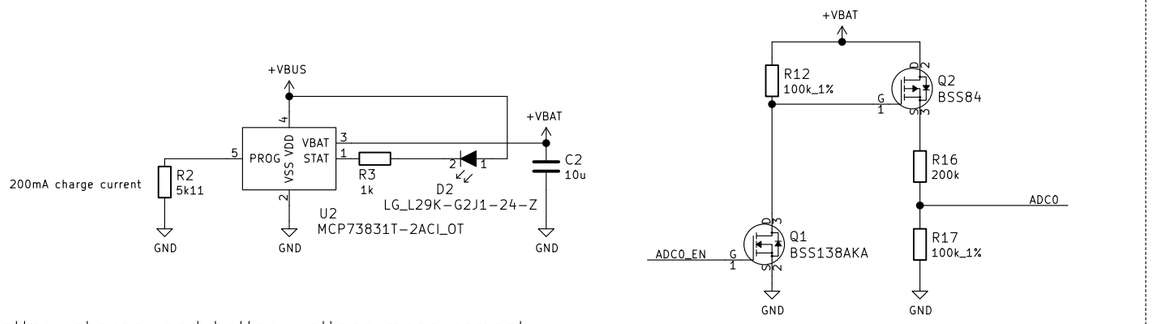

Battery charger and battery voltage measurement

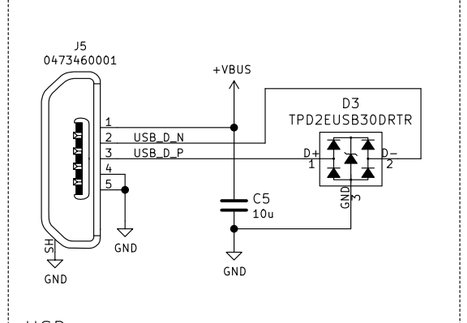

USB

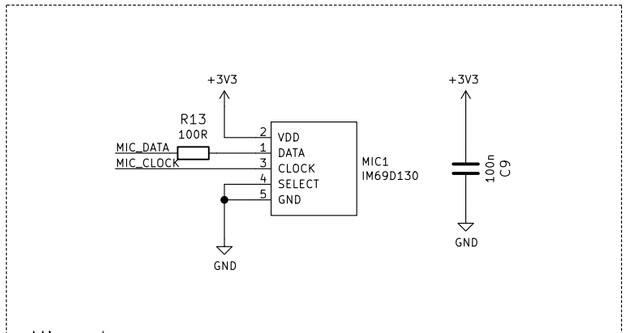

Microphone

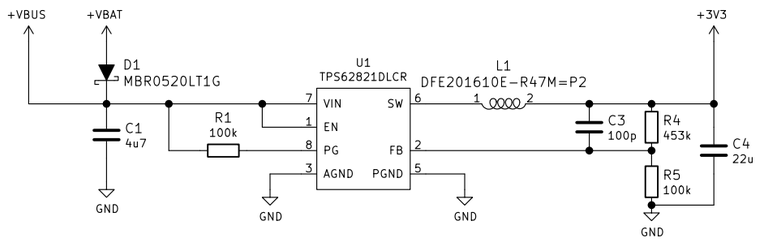

Supply

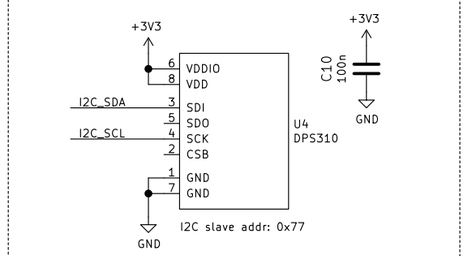

Pressure sensor

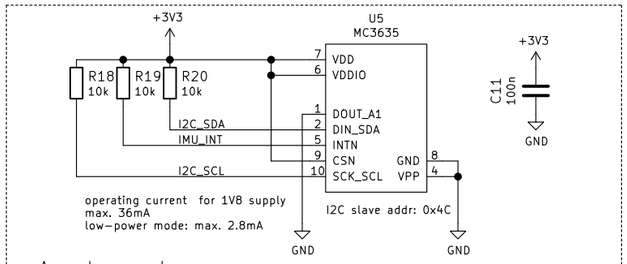

Accelerometer

open source hardware

antmicro

www.antmicro.com
Antmicro

Sheet: /
File: quicklogic-quick-feather-board.sch

Title: Quick Feather Development Kit

Size: A3	Date:	**Rev: 1.0**
KiCad E.D.A. kicad 5.1.4+dfsg1-1bpo10+1		Id: 1/1