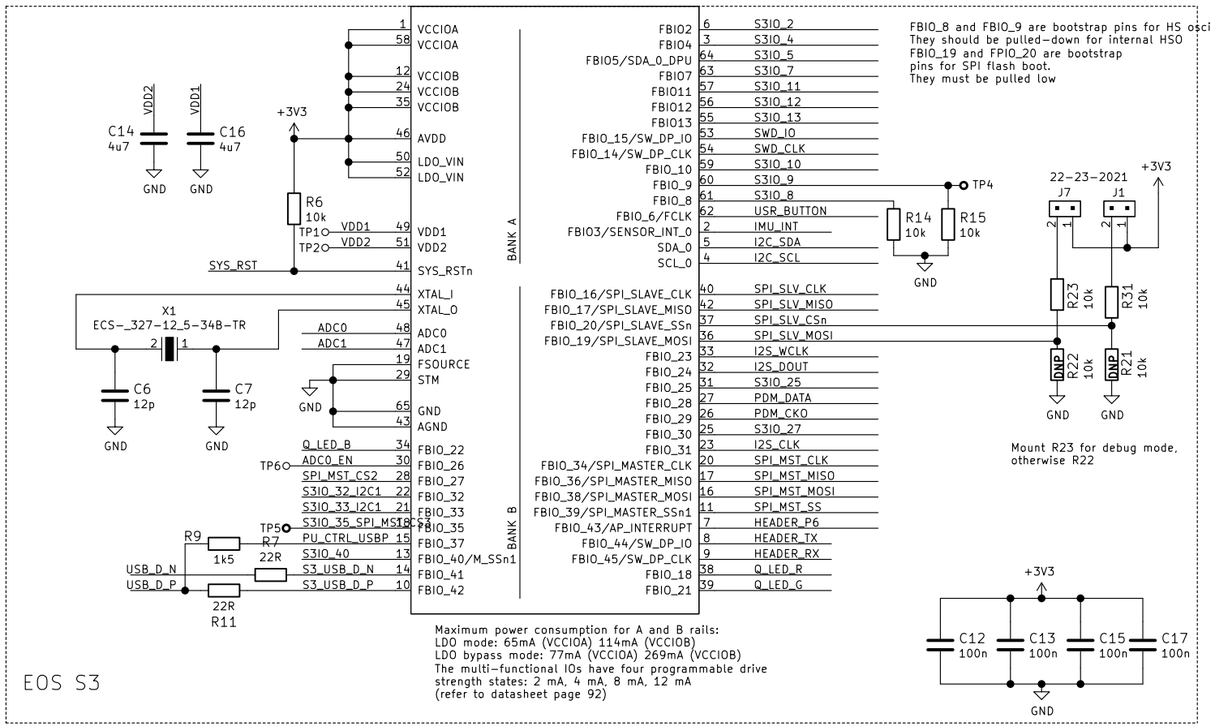

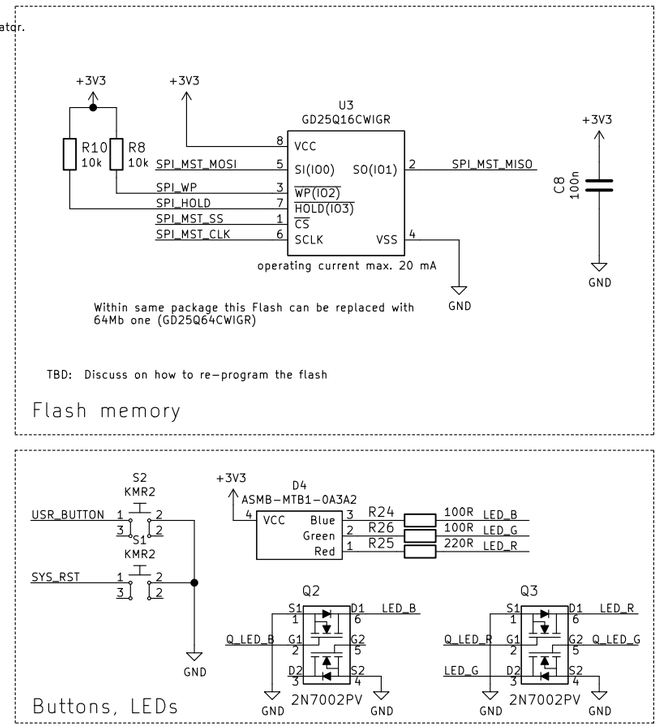

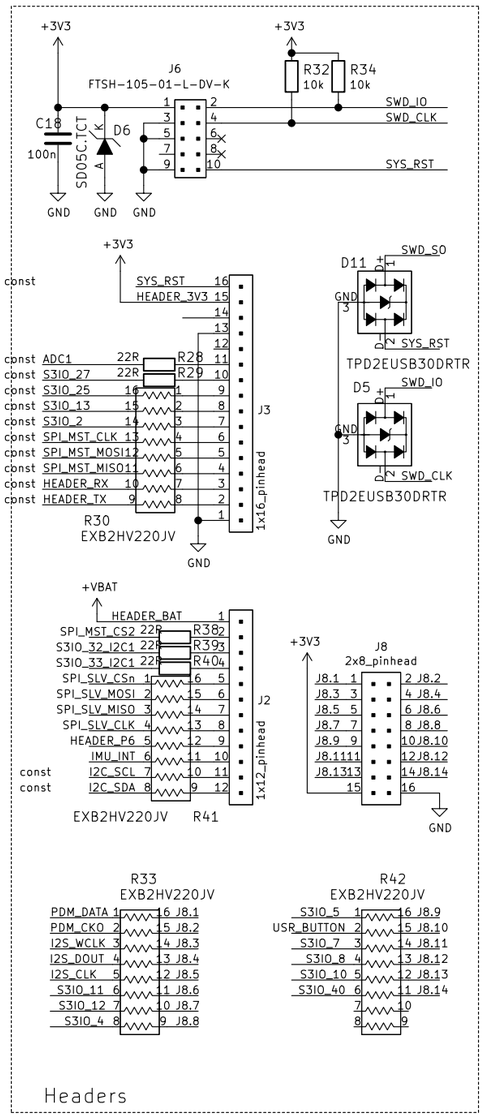

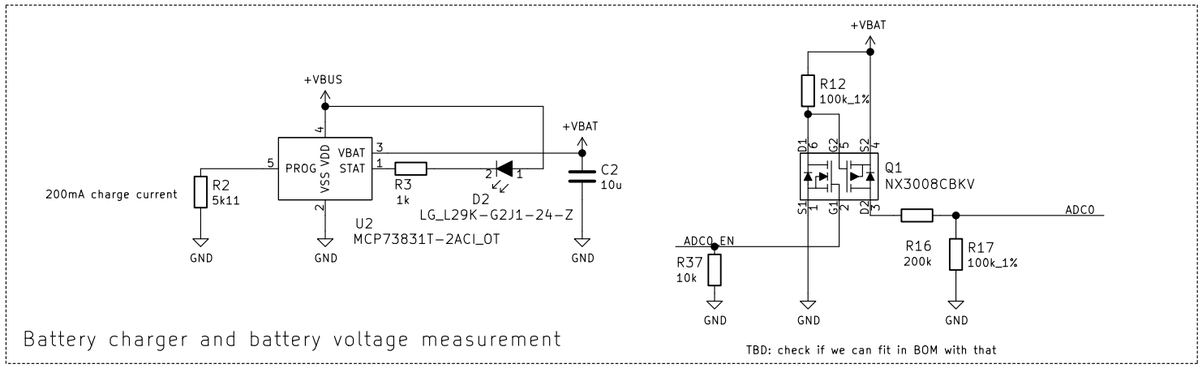

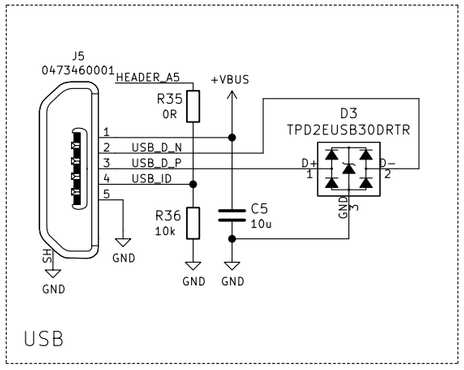

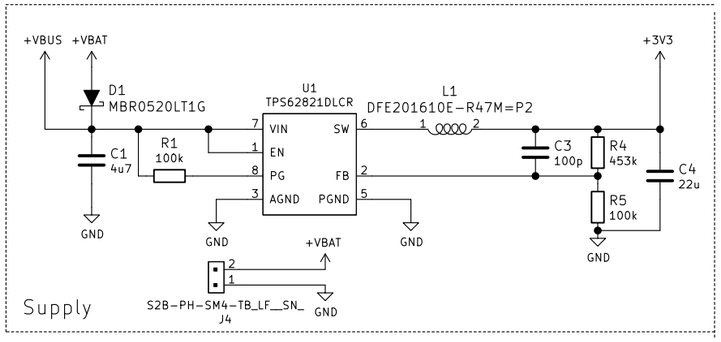

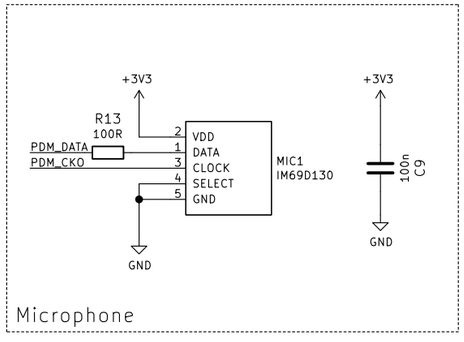

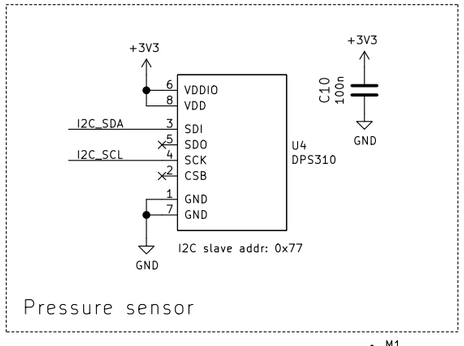

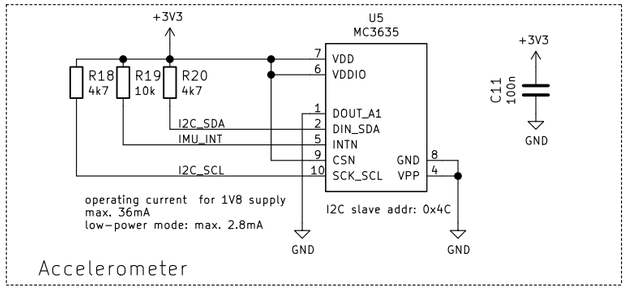

open source hardware

antmicro

Logo N1 oshw_logo

Logo N2 ql_logo

M1 mounting_pad
M2 mounting_pad
M3 mounting_pad
M4 mounting_pad

www.antmicro.com
Antmicro
Sheet: /
File: quicklogic-quick-feather-board.sch

Title: Quick Feather Development Kit

Size: A3	Date:	**Rev: 1.0**
KiCad E.D.A. kicad 5.1.5		Id: 1/1