Enables 12V power on a USB Quick Charge 2.0 interface.

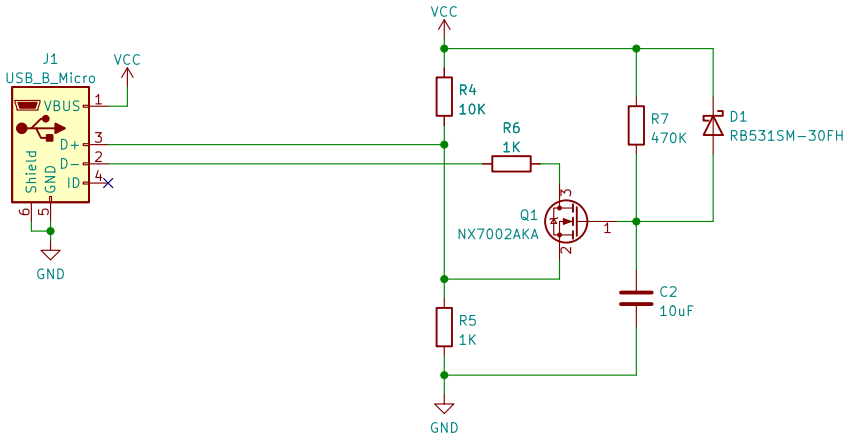

Power on/off and Brightness adjustment
Vbrightness_min = 1.3V
Vbrightness_max = 2.5V
Vbrightness_off (SW1) = 0V

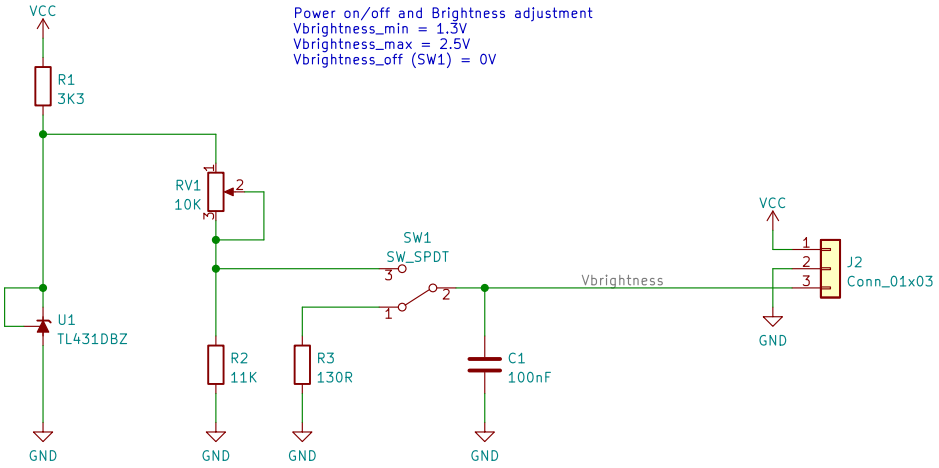

Antoine163

Sheet: /
File: usb_quick_charge_2.kicad_sch

Title: UsbQuickCharge2

Size: A4	Date: 2023-01-14	**Rev: v1.0**
KiCad E.D.A. kicad (6.0.11)		Id: 1/1