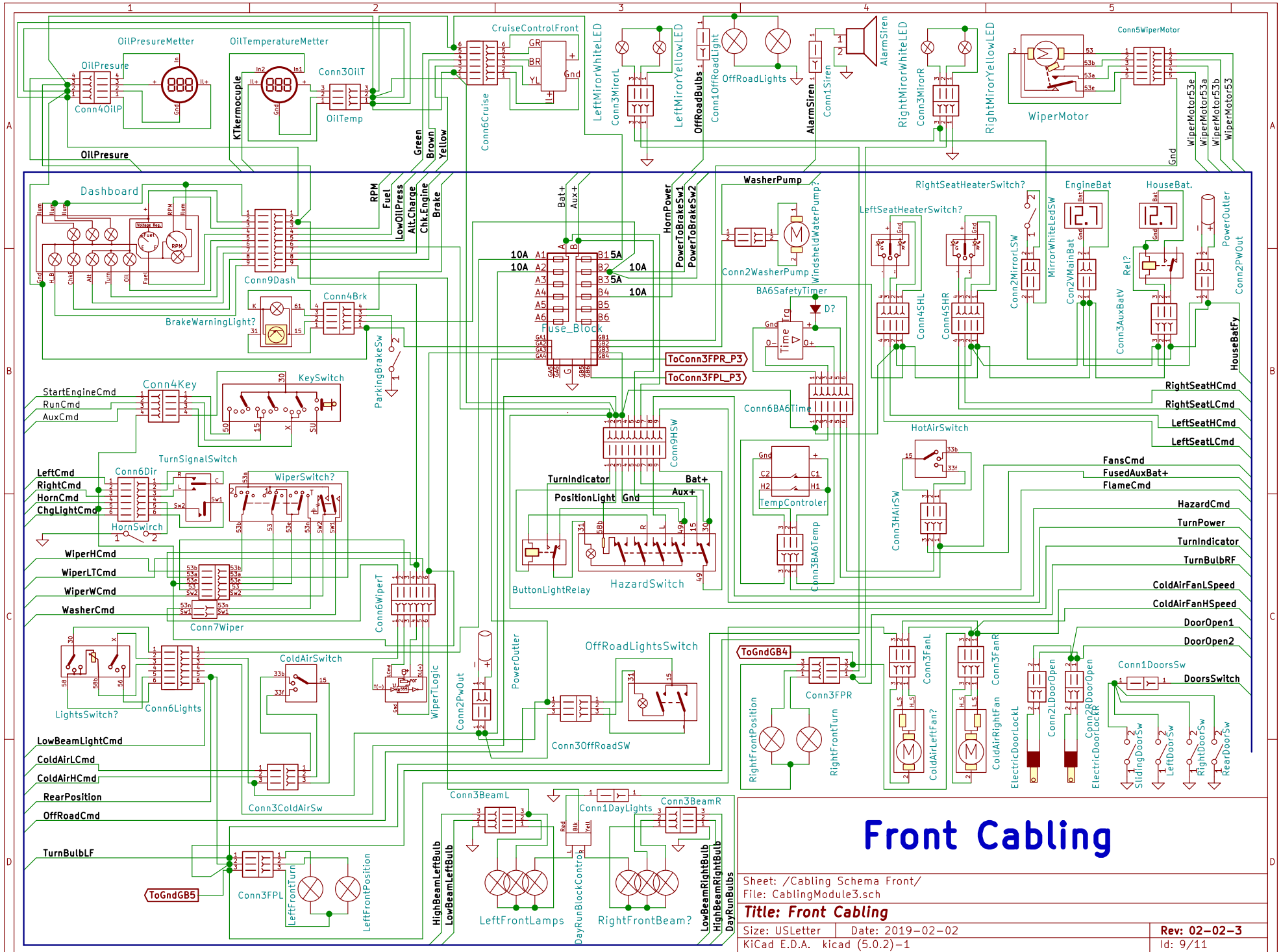
Front Cabling
Sheet: /Cabling Schema Front/
File: CablingModule3.sch
Title: Front Cabling
Size: USLetter
Date: 2019-02-02
Rev: 02-02-3
KiCad E.D.A. kicad (5.0.2)-1
Id: 9/11
OilPresureMetter
OilTemperatureMetter
OilPresure
Conn4OilP
Conn3OilT
OilTemp
KThermocouple
CruiseControlFront
Conn6Cruise
LeftMirrorWhiteLED
Conn3MirorL
LeftMirrorYellowLED
OffRoadBulbs
Conn10FfRoadLight
OffRoadLights
AlarmSiren
Conn1Siren
RightMirrorWhiteLED
Conn3MirorR
RightMirrorYellowLED
Conn5WiperMotor
WiperMotor
WiperMotor53e
WiperMotor53a
WiperMotor53b
WiperMotor53
Gnd
Green
Brown
Yellow
Dashboard
Conn9Dash
RPM
Fuel
LowOilPress
Alt.Charge
Chk.Engine
Brake
Bat+
Aux+
HornPower
PowerToBrakeSw1
PowerToBrakeSw2
WasherPump
Conn2WasherPump
WindshieldWaterPump?
RightSeatHeaterSwitch?
LeftSeatHeaterSwitch?
EngineBat
HouseBat.
PowerOutler
Conn2PWOut
Conn4SHL
Conn4SHR
Conn2MirrorLSW
MirrorWhiteLedSW
Conn2VMainBat
Conn3AuxBatV
Rel?
HouseBatFy
Conn4Brk
BrakeWarningLight?
ParkingBrakeSw
Fuse_Block
10A
5A
ToConn3FPR_P3
ToConn3FPL_P3
BA6SafetyTimer
D?
Conn6BA6Time
Conn4Key
StartEngineCmd
RunCmd
AuxCmd
KeySwitch
Conn9HSW
RightSeatHCmd
RightSeatLCmd
LeftSeatHCmd
LeftSeatLCmd
HotAirSwitch
Conn3HAirSW
FansCmd
FusedAuxBat+
FlameCmd
TurnSignalSwitch
Conn6Dir
LeftCmd
RightCmd
HornCmd
ChgLightCmd
HornSwirch
WiperSwitch?
TurnIndicator
PositionLight
Gnd
Bat+
Aux+
ButtonLightRelay
HazardSwitch
TempControler
Conn3BA6Temp
HazardCmd
TurnPower
TurnIndicator
TurnBulbRF
WiperHCmd
WiperLTCmd
WiperWCmd
WasherCmd
Conn7Wiper
Conn6WiperT
WiperTLogic
ColdAirFanLSpeed
ColdAirFanHSpeed
DoorOpen1
DoorOpen2
LightsSwitch?
Conn6Lights
ColdAirSwitch
Conn2PwOut
PowerOutler
OffRoadLightsSwitch
Conn3OffRoadSW
ToGndGB4
Conn3FPR
RightFrontPosition
RightFrontTurn
Conn3FanL
Conn3FanR
ColdAirLeftFan?
ColdAirRightFan
ElectricDoorLockL
Conn2LDoorOpen
Conn2RDoorOpen
ElectricDoorLockR
Conn1DoorsSw
DoorsSwitch
SlidingDoorSw
LeftDoorSw
RightDoorSw
RearDoorSw
LowBeamLightCmd
ColdAirLCmd
ColdAirHCmd
RearPosition
OffRoadCmd
Conn3ColdAirSw
Conn3BeamL
Conn1DayLights
Conn3BeamR
TurnBulbLF
ToGndGB5
Conn3FPL
LeftFrontTurn
LeftFrontPosition
HighBeamLeftBulb
LowBeamLeftBulb
LeftFrontLamps
DayRunBlockControl
RightFrontBeam?
LowBeamRightBulb
HighBeamRightBulb
DayRunBulbs