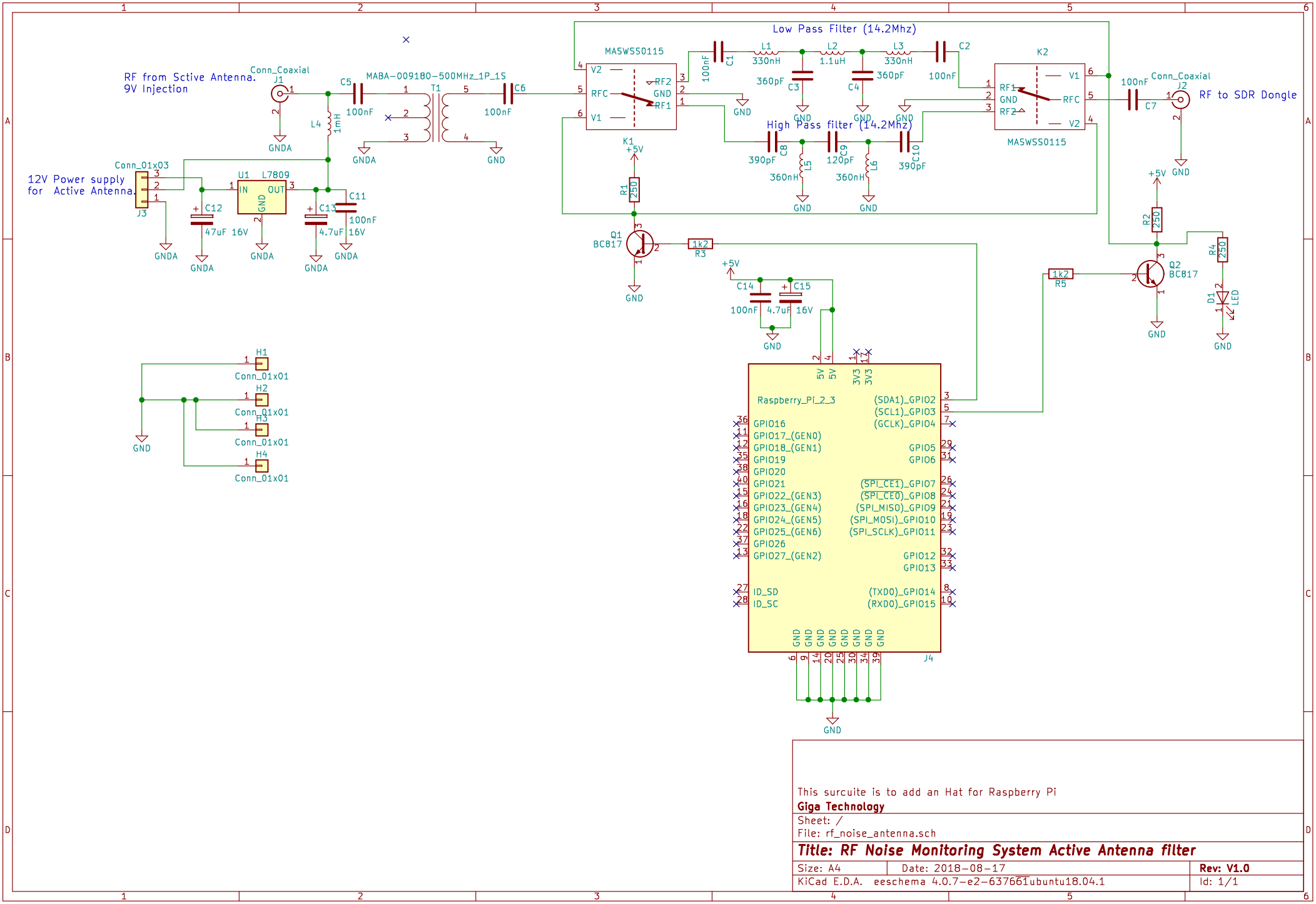

This surcuite is to add an Hat for Raspberry Pi

Giga Technology

Sheet: /

File: rf_noise_antenna.sch

Title: RF Noise Monitoring System Active Antenna filter

Size: A4	Date: 2018-08-17	**Rev: V1.0**
KiCad E.D.A. eeschema 4.0.7-e2-637661ubuntu18.04.1		Id: 1/1