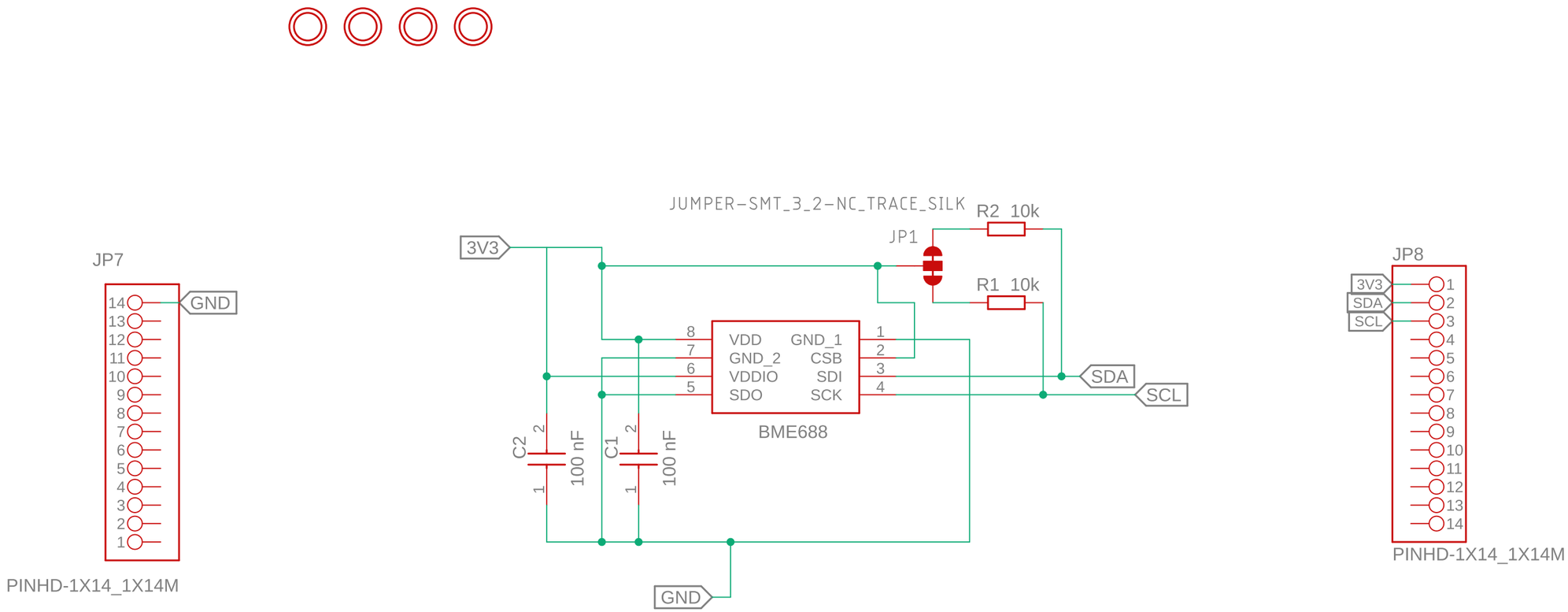

czujnik v18

08.07.2024 19:32 | Sheet: 1/1

Drawing: >AUTHOR | Adafruit Industries