Proteus Lab

นายวีรศักดิ์ ราชวังเมือง

รหัสนักศึกษา: 5735512083

Section: 02

Program33

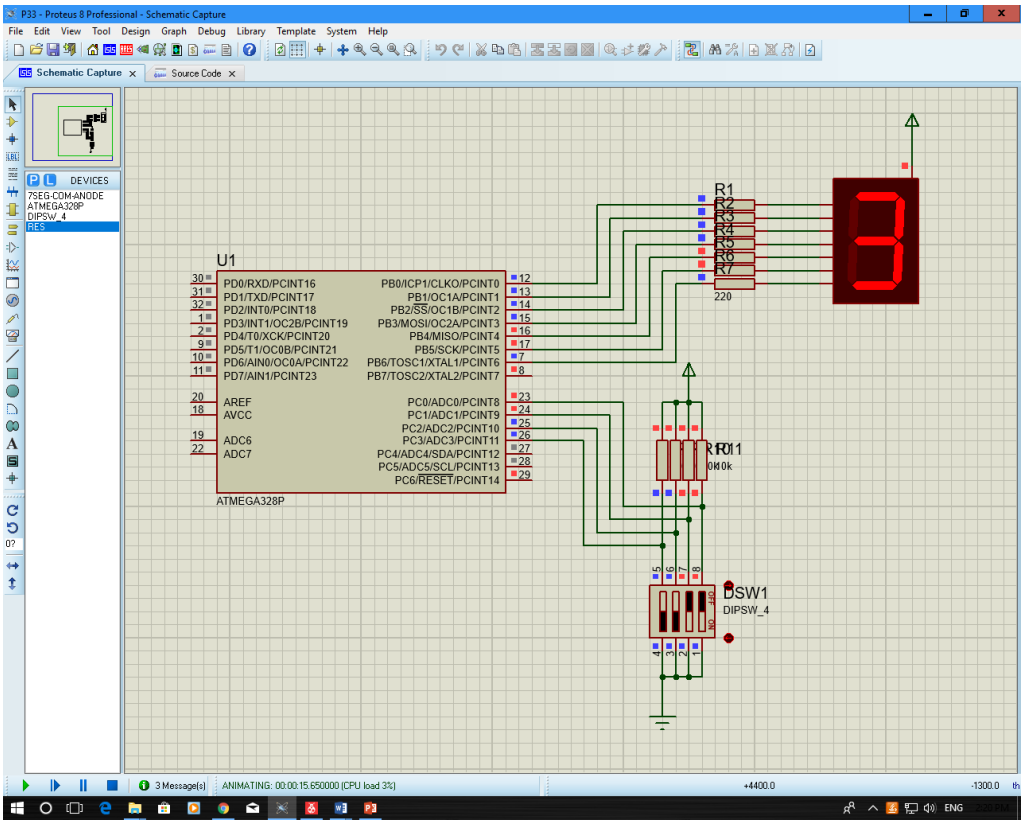

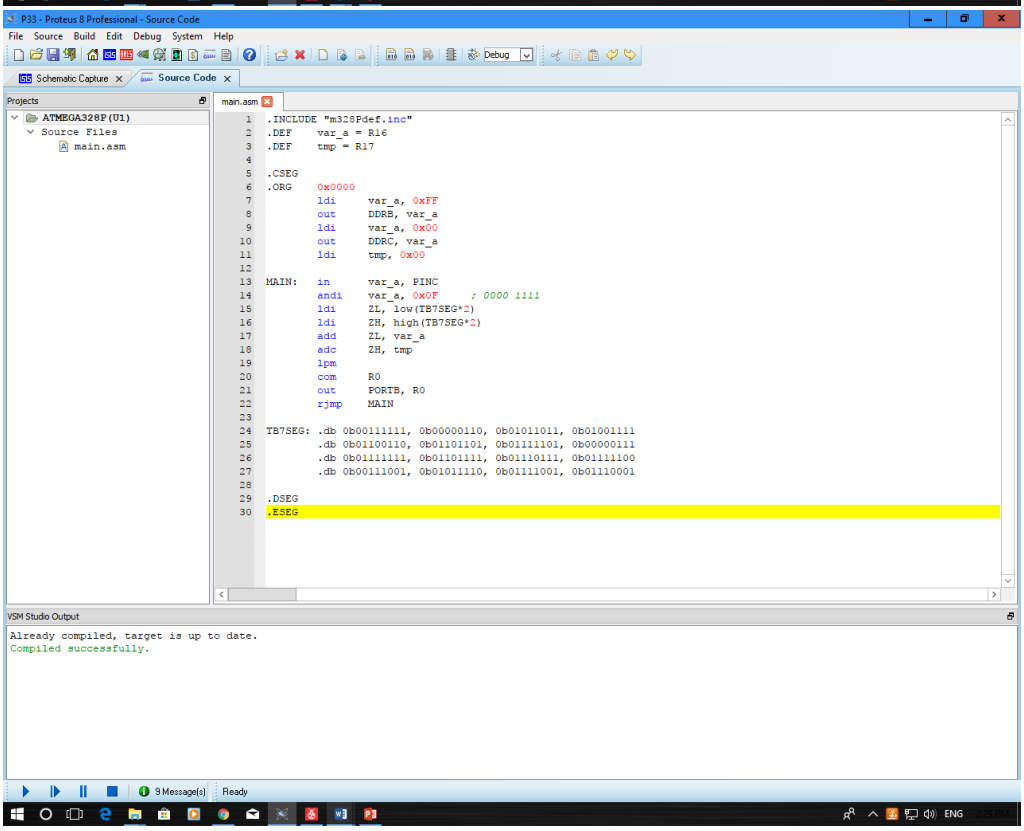

Program35

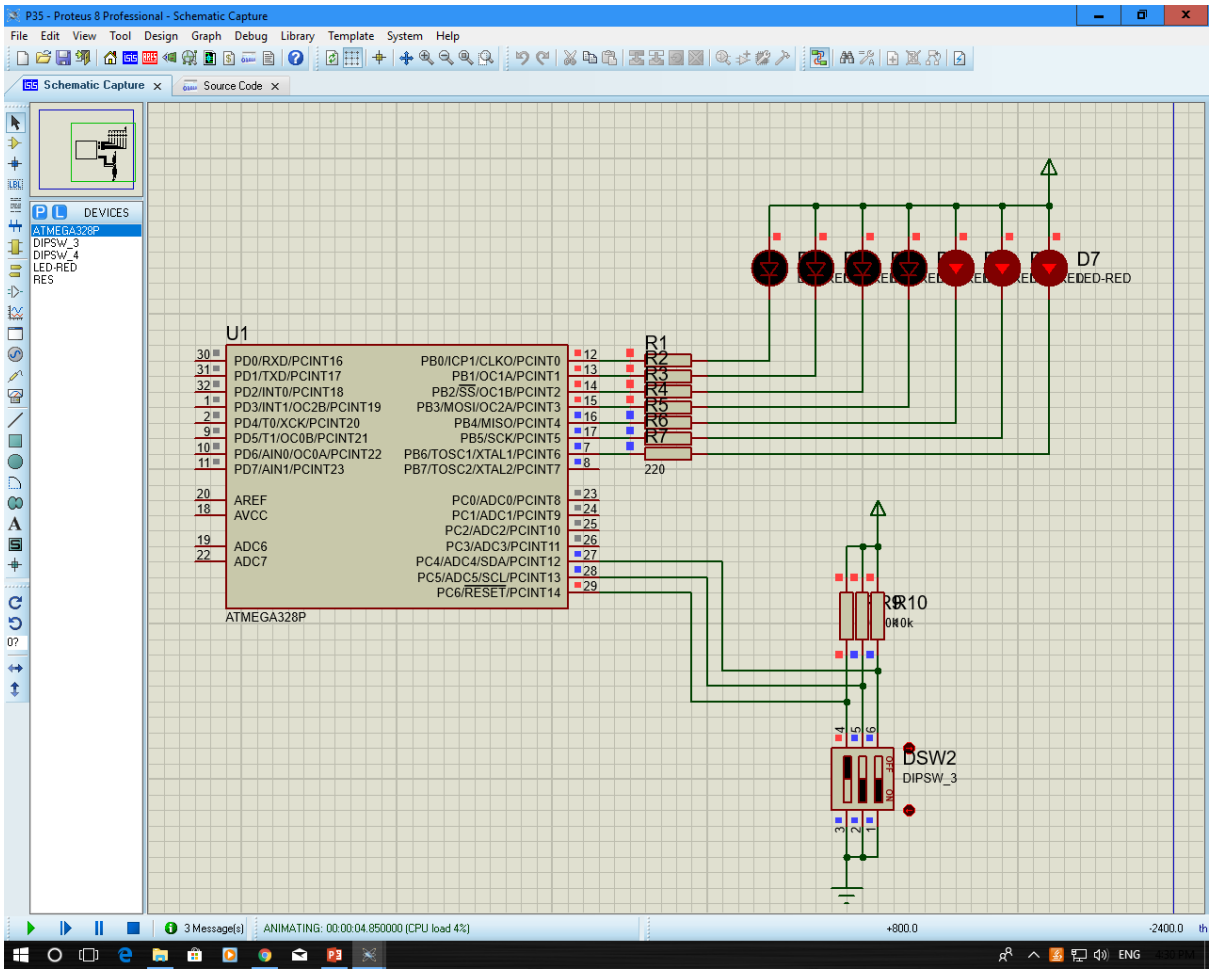
P35 - Proteus 8 Professional - Schematic Capture
File Edit View Tool Design Graph Debug Library Template System Help
Schematic Capture
Source Code
DEVICES
ATMEGA328P
DIPSW_3
DIPSW_4
LED-RED
RES
U1
PD0/RXD/PCINT16
PD1/TXD/PCINT17
PD2/INT0/PCINT18
PD3/INT1/OC2B/PCINT19
PD4/T0/XCK/PCINT20
PD5/T1/OC0B/PCINT21
PD6/AIN0/OC0A/PCINT22
PD7/AIN1/PCINT23
AREF
AVCC
ADC6
ADC7
PB0/ICP1/CLKO/PCINT0
PB1/OC1A/PCINT1
PB2/SS/OC1B/PCINT2
PB3/MOSI/OC2A/PCINT3
PB4/MISO/PCINT4
PB5/SCK/PCINT5
PB6/TOSC1/XTAL1/PCINT6
PB7/TOSC2/XTAL2/PCINT7
PC0/ADC0/PCINT8
PC1/ADC1/PCINT9
PC2/ADC2/PCINT10
PC3/ADC3/PCINT11
PC4/ADC4/SDA/PCINT12
PC5/ADC5/SCL/PCINT13
PC6/RESET/PCINT14
ATMEGA328P
R1
R2
R3
R4
R5
R6
R7
220
D7
LED-RED
R10
10k
DSW2
DIPSW_3
3 Message(s)
ANIMATING: 00:00:04.850000 (CPU load 4%)
+800.0
-2400.0

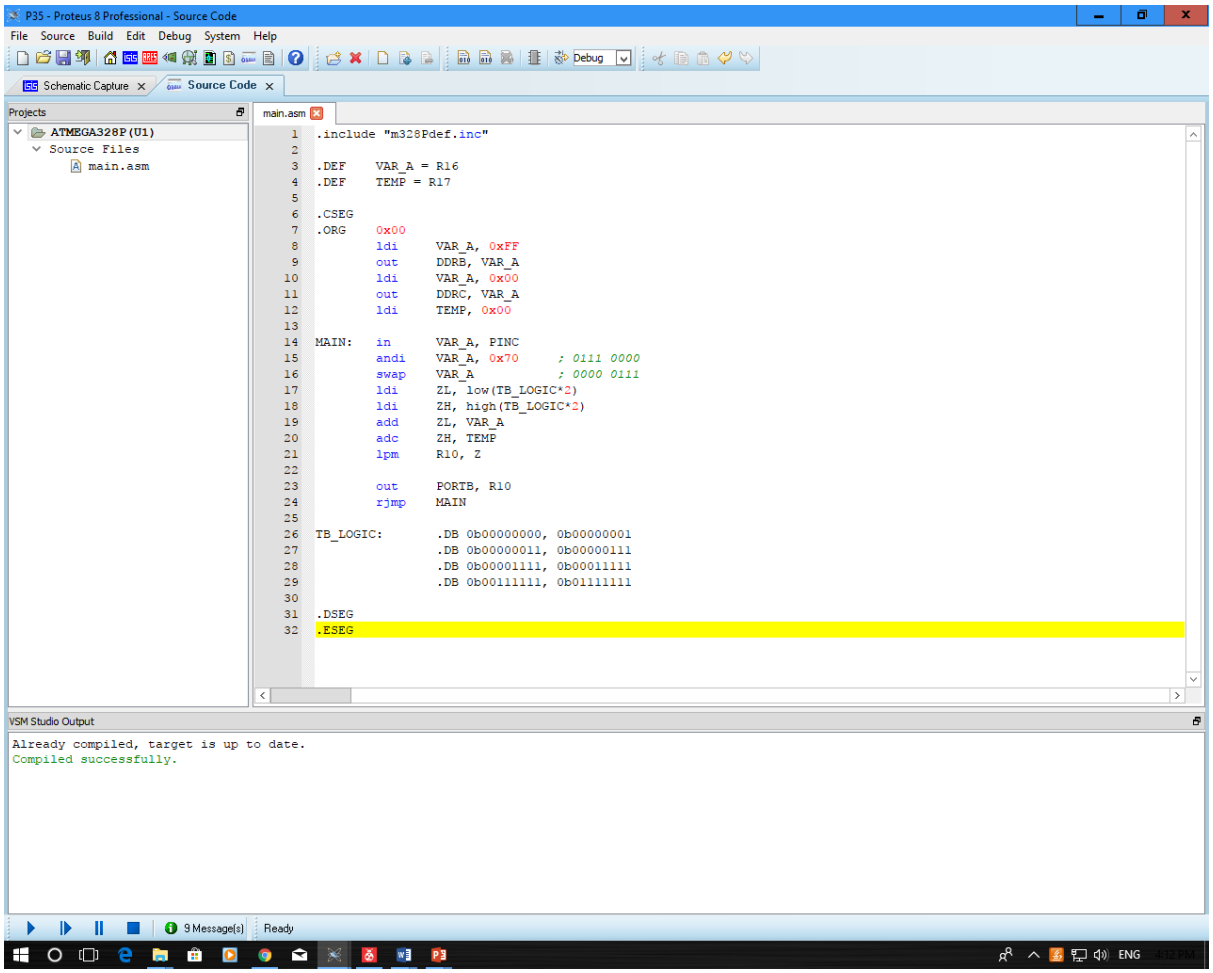
P35 - Proteus 8 Professional - Source Code
File Source Build Edit Debug System Help
Schematic Capture
Source Code
Projects
ATMEGA328P(U1)
Source Files
main.asm
.include "m328Pdef.inc"
.DEF VAR_A = R16
.DEF TEMP = R17
.CSEG
.ORG 0x00
ldi VAR_A, 0xFF
out DDRB, VAR_A
ldi VAR_A, 0x00
out DDRC, VAR_A
ldi TEMP, 0x00
MAIN: in VAR_A, PINC
andi VAR_A, 0x70 ; 0111 0000
swap VAR_A ; 0000 0111
ldi ZL, low(TB_LOGIC*2)
ldi ZH, high(TB_LOGIC*2)
add ZL, VAR_A
adc ZH, TEMP
lpm R10, Z
out PORTB, R10
rjmp MAIN
TB_LOGIC: .DB 0b00000000, 0b00000001
.DB 0b00000011, 0b00000111
.DB 0b00001111, 0b00011111
.DB 0b00111111, 0b01111111
.DSEG
.ESEG
VSM Studio Output
Already compiled, target is up to date.
Compiled successfully.
9 Message(s)
Ready