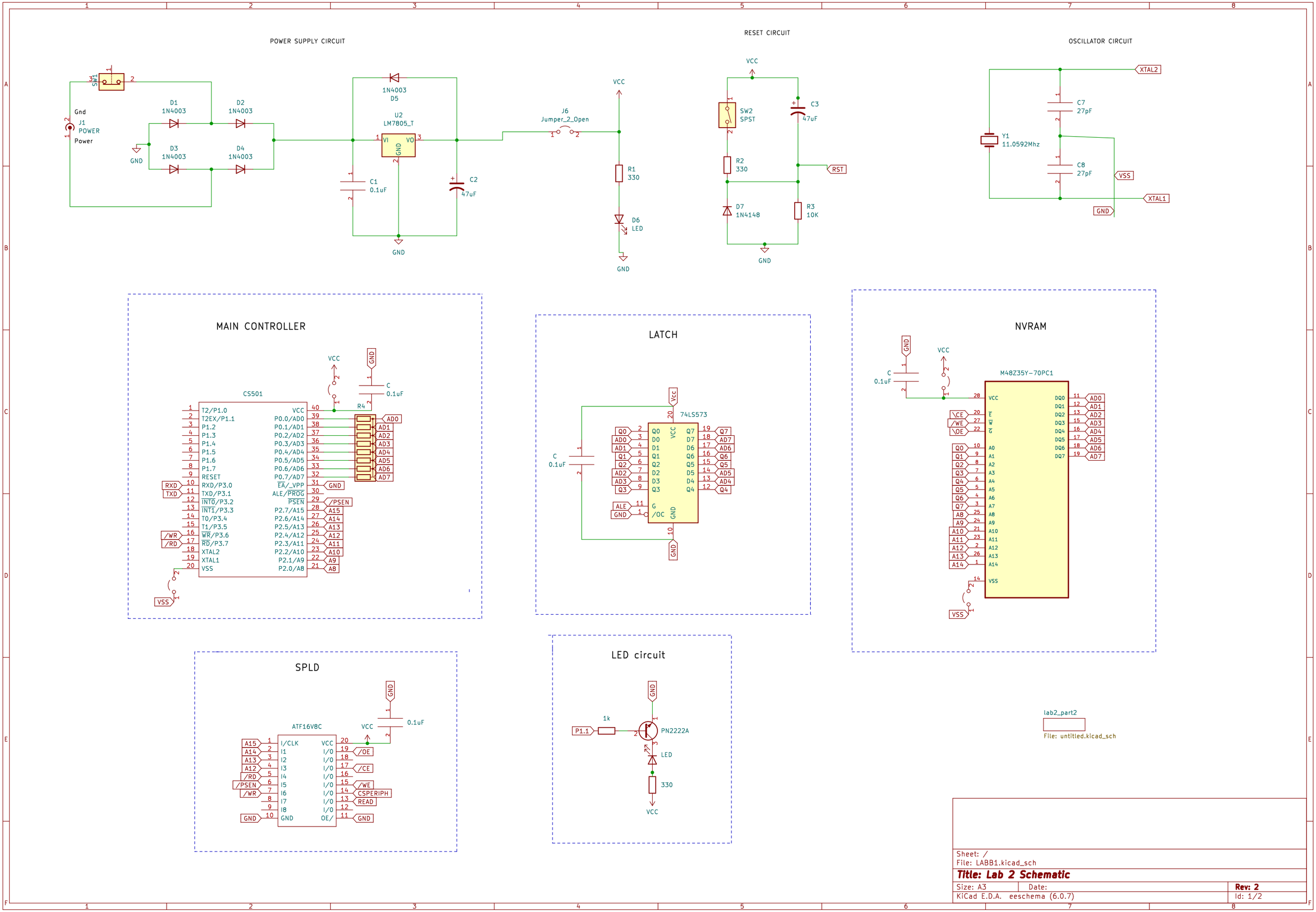

Sheet: /
File: LABB1.kicad_sch

Title: Lab 2 Schematic

Size: A3	Date:	Rev: 2
KiCad E.D.A. eeschema (6.0.7)		Id: 1/2

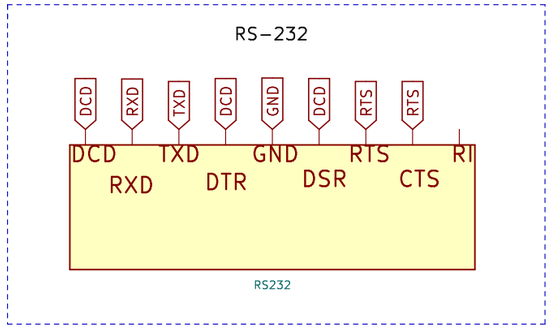

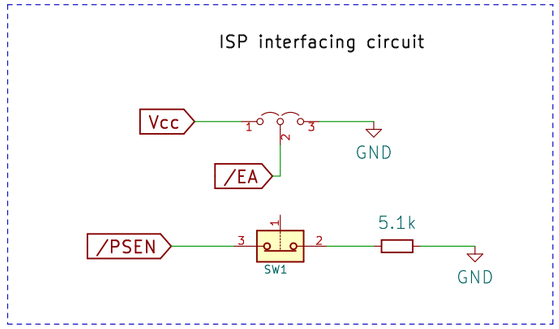

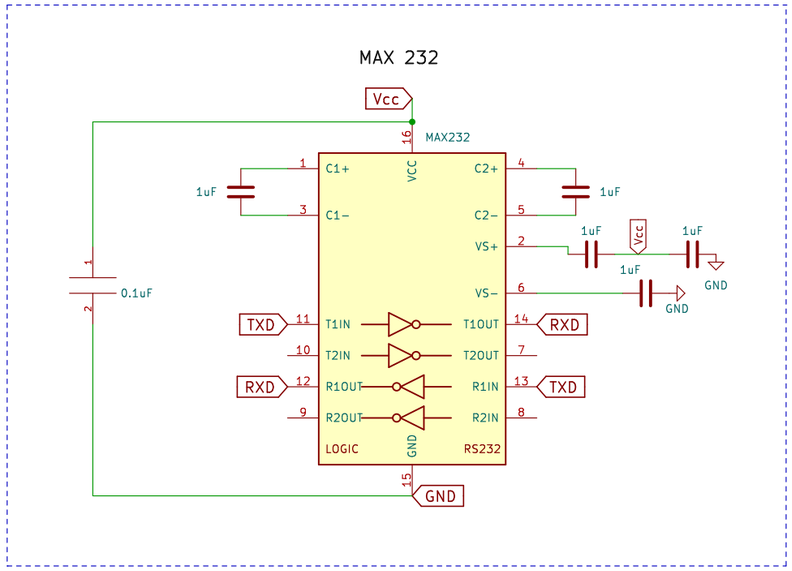

Sheet: /lab2_part2/
File: untitled.kicad_sch

Title:

Size: A3	Date:	Rev:
KiCad E.D.A. eeschema (6.0.7)		Id: 2/2