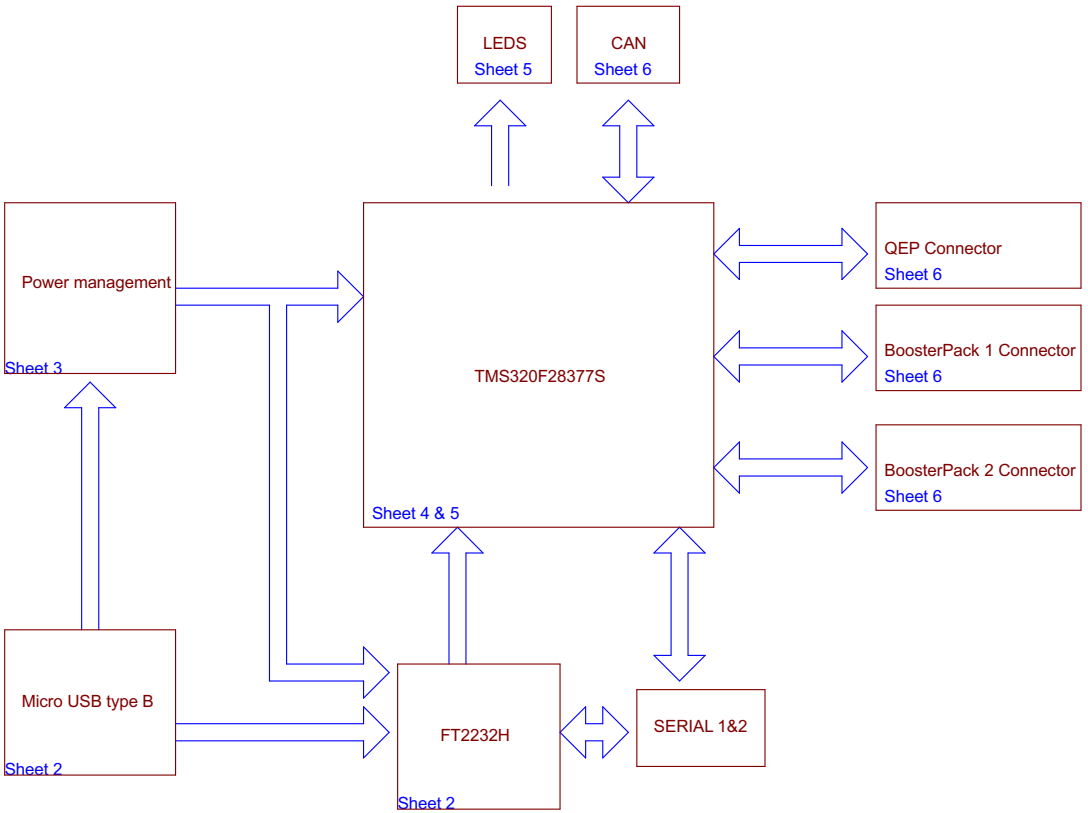

Note: DNP = Do Not Populate

TEXAS INSTRUMENTS
LaunchPad Development Kit
For evaluation only;
Not FCC approved for resale.

REV	DATA	NOTE
REV1.0	20150326	ORIGINAL RELEASED

TITLE: LAUNCHXL-F28377S

Document Number: BLOCK DIAGRAM

REV: 1.1

Date: 6/22/2015 9:21:57 AM

Sheet: 1/6

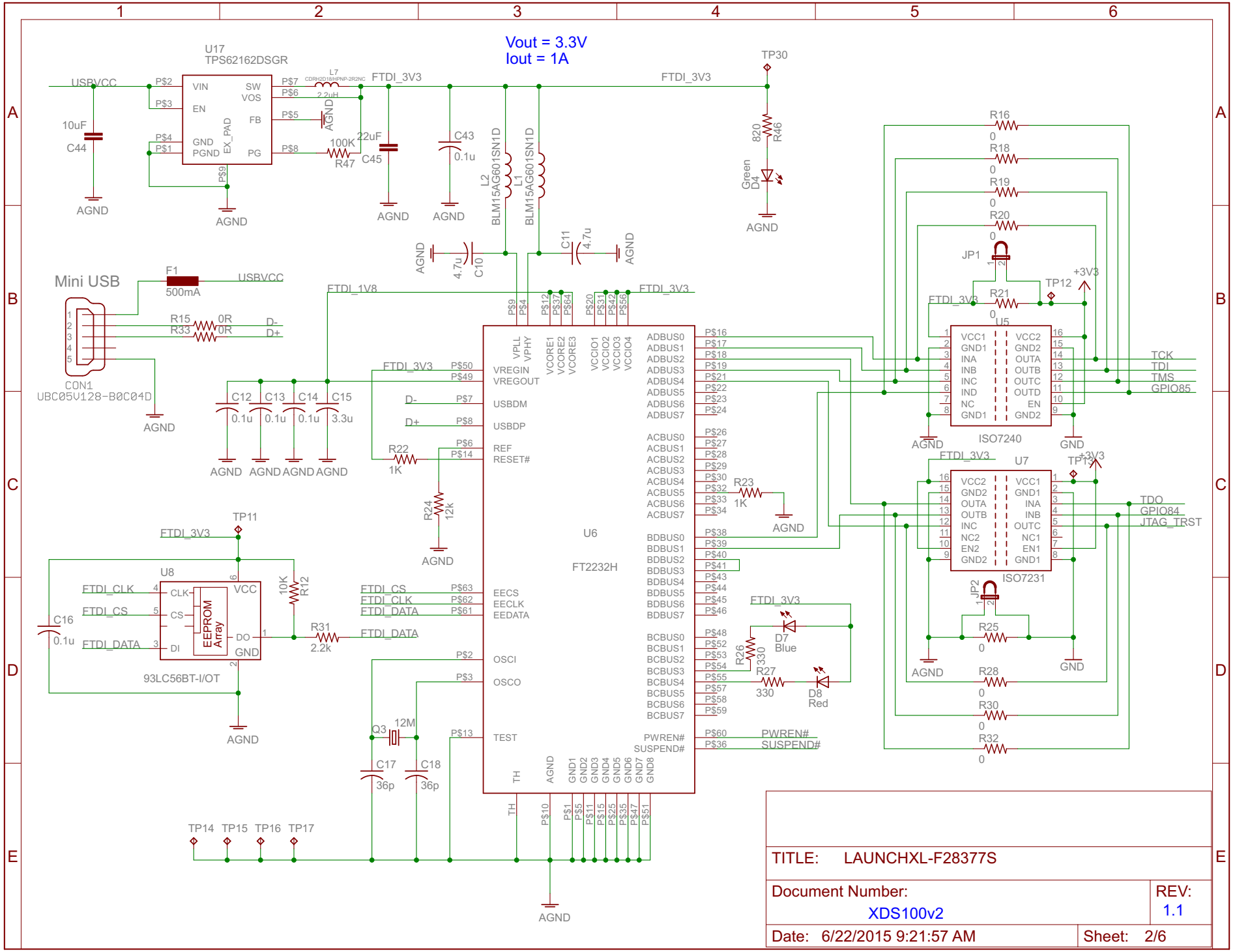

6/22/2015 9:23:55 AM f=0.89 C:\Users\a0272436\Documents\TI\Boards\LAUNCHXL-F28377S\LAUNCHXL-F28377S.sch (Sheet: 2/6)

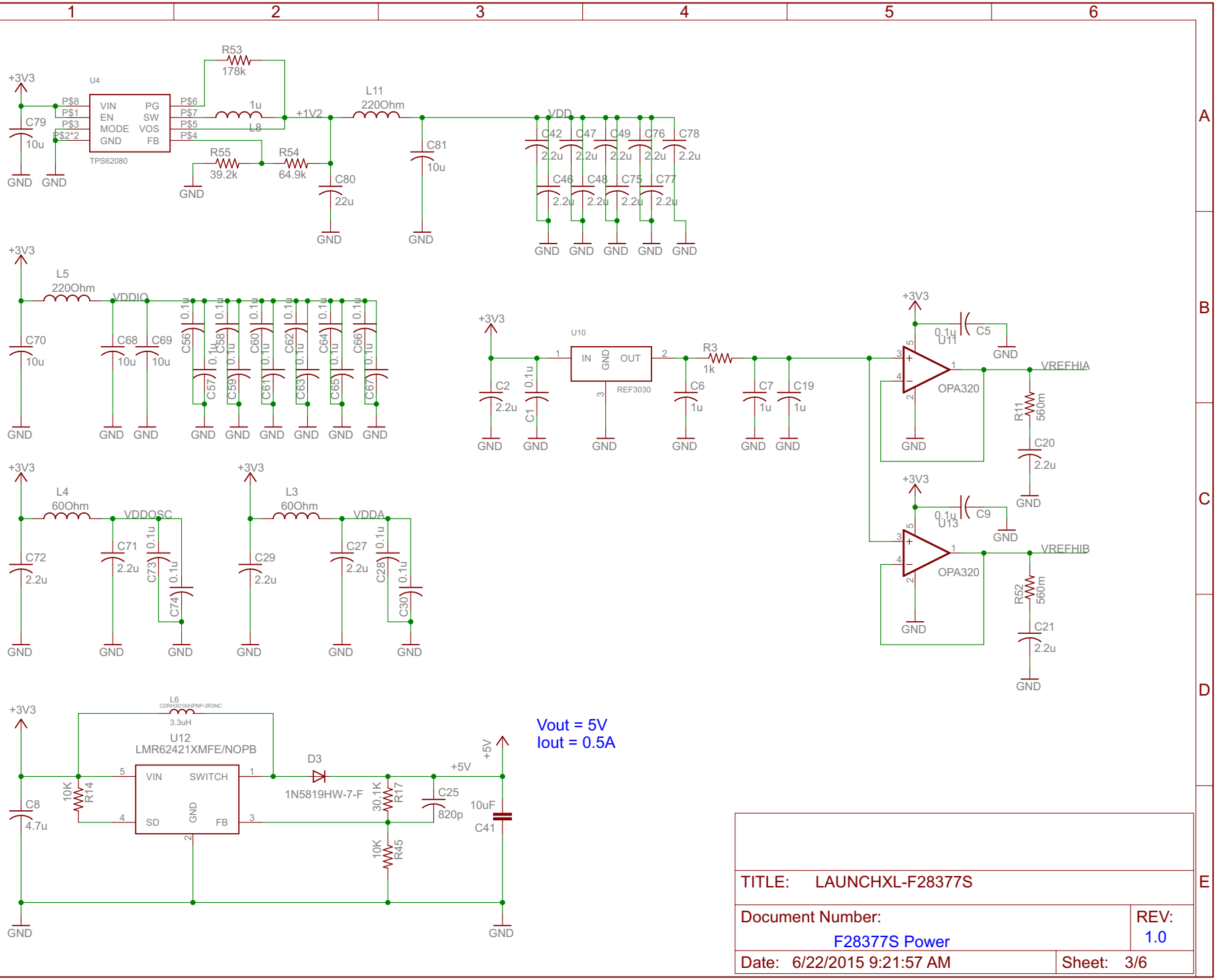
1
2
3
4
5
6
A
B
C
D
E
+3V3
U4
TPS62080
VIN
PG
EN
SW
MODE
VOS
GND
FB
R53
178k
1u
L8
+1V2
L11
220Ohm
R55
39.2k
R54
64.9k
C79
10u
C80
22u
C81
10u
VDD
C42
C47
C49
C76
C78
C46
C48
C75
C77
2.2u
L5
220Ohm
VDDIO
C70
C68
C69
C56
C57
C58
C59
C60
C61
C62
C63
C64
C65
C66
C67
0.1u
L4
60Ohm
VDDOSC
C72
C71
C73
C74
L3
60Ohm
VDDA
C29
C27
C28
C30
U10
REF3030
IN
OUT
R3
1k
C2
C1
C6
C7
C19
U11
U13
OPA320
C5
C9
VREFHIA
VREFHIB
R11
R52
560m
C20
C21
2.2u
L6
3.3uH
U12
LMR62421XMFE/NOPB
VIN
SWITCH
SD
FB
D3
1N5819HW-7-F
C8
4.7u
R14
10K
R17
30.1K
R45
C25
820p
C41
10uF
+5V
Vout = 5V
Iout = 0.5A
TITLE: LAUNCHXL-F28377S
Document Number:
F28377S Power
REV:
1.0
Date: 6/22/2015 9:21:57 AM
Sheet: 3/6

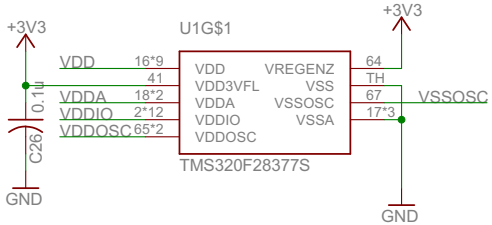

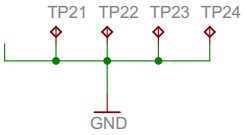

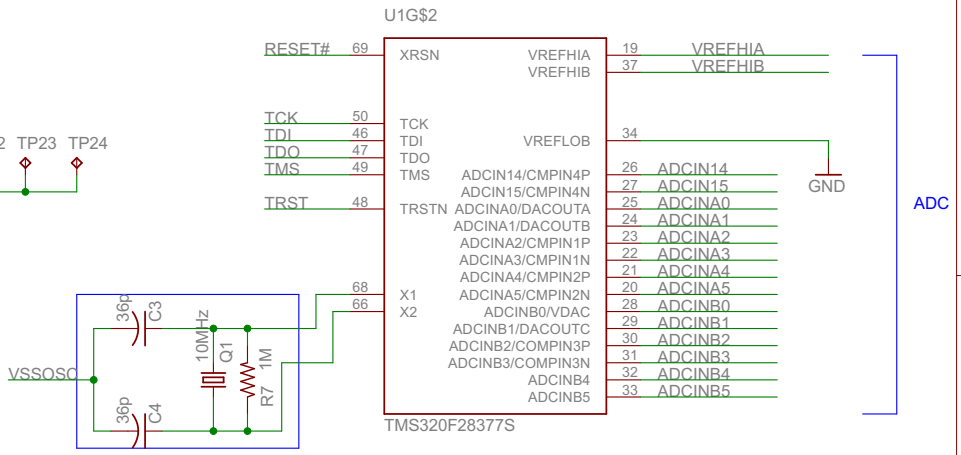

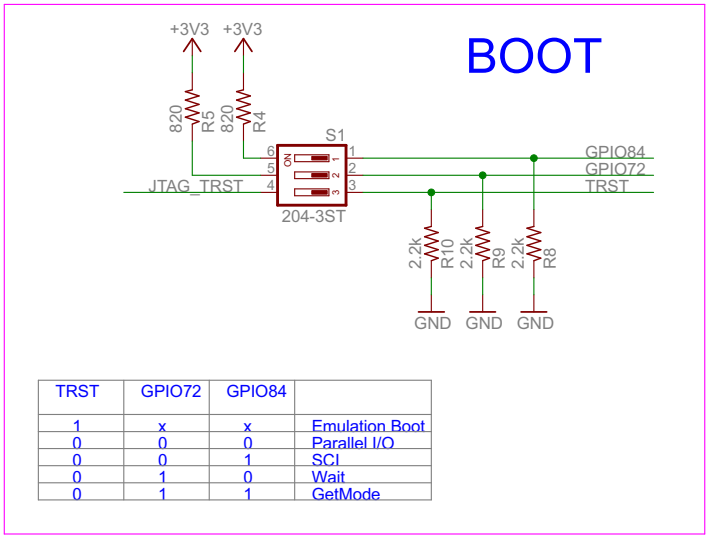

TRST	GPIO72	GPIO84	
1	x	x	Emulation Boot
0	0	0	Parallel I/O
0	0	1	SCI
0	1	0	Wait
0	1	1	GetMode

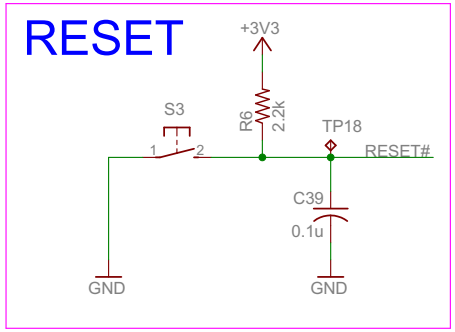

TITLE: LAUNCHXL-F28377S		
Document Number: F28377S_A		REV: 1.0
Date: 6/22/2015 9:21:57 AM	Sheet: 4/6	

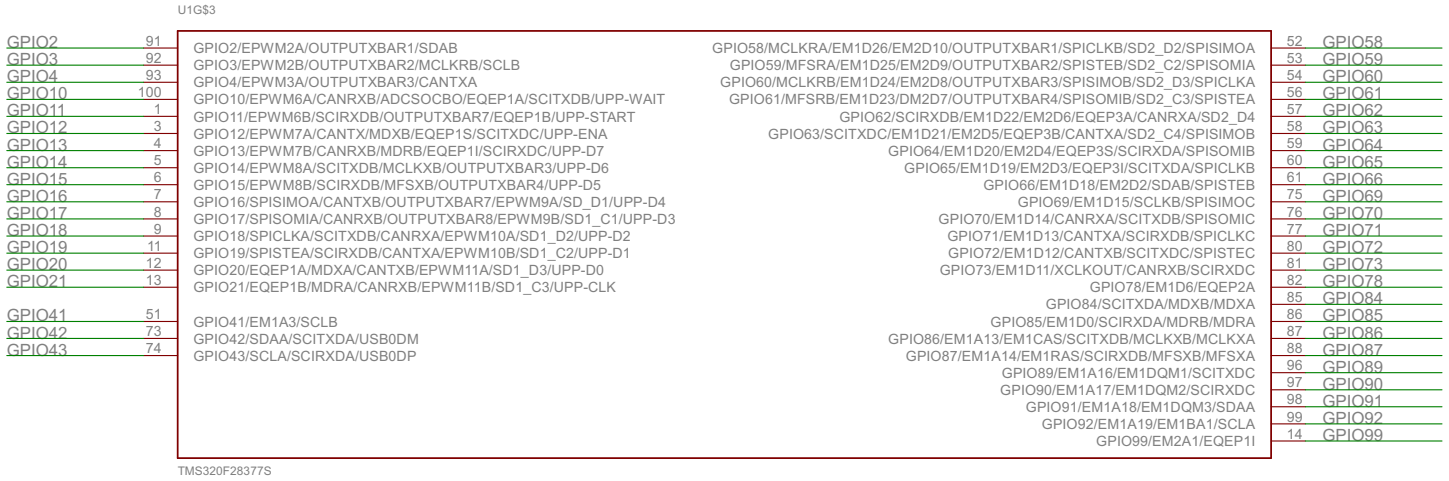

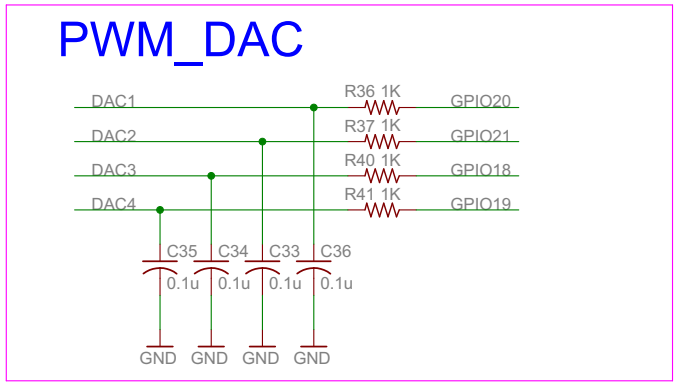

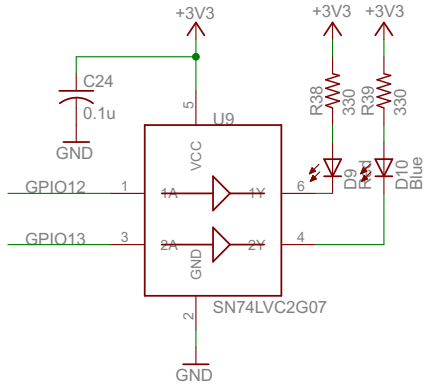

TITLE: LAUNCHXL-F28377S	
Document Number: F28377S_B	REV: 1.1
Date: 6/22/2015 9:21:57 AM	Sheet: 5/6

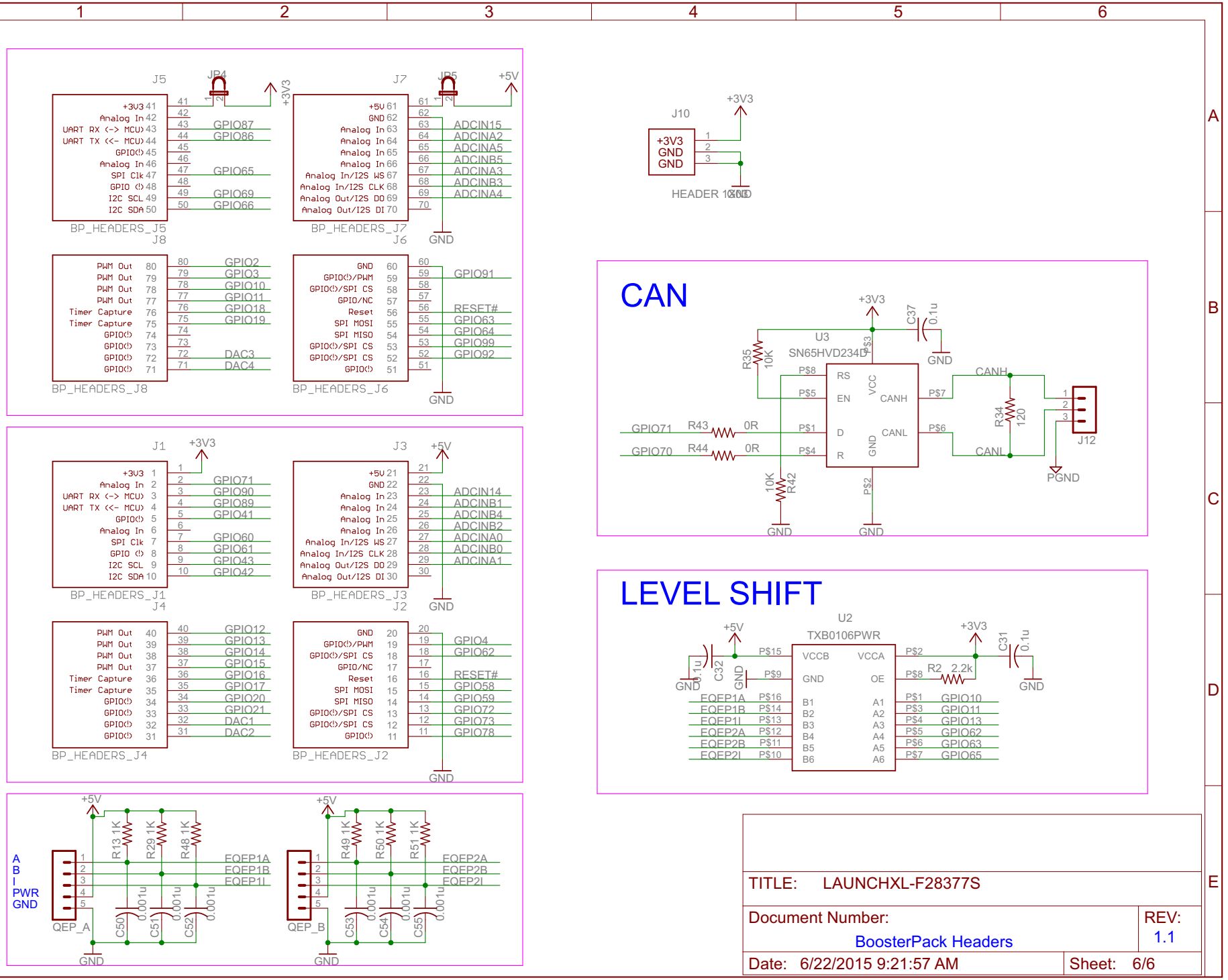
1
2
3
4
5
6
A
B
C
D
E
J5
JP4
+3V3
+3V3 41
Analog In 42
UART RX (-> MCU) 43
UART TX (<- MCU) 44
GPIO(!) 45
Analog In 46
SPI Clk 47
GPIO (!) 48
I2C SCL 49
I2C SDA 50
GPIO87
GPIO86
GPIO65
GPIO69
GPIO66
BP_HEADERS_J5
J7
JP5
+5V
+5V 61
GND 62
Analog In 63
Analog In 64
Analog In 65
Analog In 66
Analog In/I2S WS 67
Analog In/I2S CLK 68
Analog Out/I2S DO 69
Analog Out/I2S DI 70
ADCIN15
ADCINA2
ADCINA5
ADCINB5
ADCINA3
ADCINB3
ADCINA4
BP_HEADERS_J7
J8
PWM Out 80
PWM Out 79
PWM Out 78
PWM Out 77
Timer Capture 76
Timer Capture 75
GPIO(!) 74
GPIO(!) 73
GPIO(!) 72
GPIO(!) 71
GPIO2
GPIO3
GPIO10
GPIO11
GPIO18
GPIO19
DAC3
DAC4
BP_HEADERS_J8
J6
GND 60
GPIO(!)/PWM 59
GPIO(!)/SPI CS 58
GPIO/NC 57
Reset 56
SPI MOSI 55
SPI MISO 54
GPIO(!)/SPI CS 53
GPIO(!)/SPI CS 52
GPIO(!) 51
GPIO91
RESET#
GPIO63
GPIO64
GPIO99
GPIO92
BP_HEADERS_J6
GND
J1
+3V3
+3V3 1
Analog In 2
UART RX (-> MCU) 3
UART TX (<- MCU) 4
GPIO(!) 5
Analog In 6
SPI Clk 7
GPIO (!) 8
I2C SCL 9
I2C SDA 10
GPIO71
GPIO90
GPIO89
GPIO41
GPIO60
GPIO61
GPIO43
GPIO42
BP_HEADERS_J1
J4
PWM Out 40
PWM Out 39
PWM Out 38
PWM Out 37
Timer Capture 36
Timer Capture 35
GPIO(!) 34
GPIO(!) 33
GPIO(!) 32
GPIO(!) 31
GPIO12
GPIO13
GPIO14
GPIO15
GPIO16
GPIO17
GPIO20
GPIO21
DAC1
DAC2
BP_HEADERS_J4
J3
+5V
+5V 21
GND 22
Analog In 23
Analog In 24
Analog In 25
Analog In 26
Analog In/I2S WS 27
Analog In/I2S CLK 28
Analog Out/I2S DO 29
Analog Out/I2S DI 30
ADCIN14
ADCINB1
ADCINB4
ADCINB2
ADCINA0
ADCINB0
ADCINA1
BP_HEADERS_J3
J2
GND 20
GPIO(!)/PWM 19
GPIO(!)/SPI CS 18
GPIO/NC 17
Reset 16
SPI MOSI 15
SPI MISO 14
GPIO(!)/SPI CS 13
GPIO(!)/SPI CS 12
GPIO(!) 11
GPIO4
GPIO62
RESET#
GPIO58
GPIO59
GPIO72
GPIO73
GPIO78
BP_HEADERS_J2
GND
A
B
I
PWR
GND
+5V
R13 1K
R29 1K
R48 1K
EQEP1A
EQEP1B
EQEP1I
C50 0.001u
C51 0.001u
C52 0.001u
QEP_A
GND
+5V
R49 1K
R50 1K
R51 1K
EQEP2A
EQEP2B
EQEP2I
C53 0.001u
C54 0.001u
C55 0.001u
QEP_B
GND
J10
+3V3
+3V3
GND
GND
1
2
3
HEADER 1X3
CAN
+3V3
U3
SN65HVD234D
C37 0.1u
GND
R35 10K
P$3
P$8
RS
VCC
P$5
EN
CANH
P$7
CANH
GPIO71
R43
0R
P$1
D
CANL
P$6
GPIO70
R44
0R
P$4
R
GND
CANL
R34 120
J12
1
2
3
PGND
10K
R42
P$2
GND
GND
LEVEL SHIFT
U2
TXB0106PWR
+5V
+3V3
C31 0.1u
C32 0.1u
GND
GND
GND
P$15
VCCB
VCCA
P$2
P$9
GND
OE
P$8
R2 2.2k
EQEP1A
P$16
B1
A1
P$1
GPIO10
EQEP1B
P$14
B2
A2
P$3
GPIO11
EQEP1I
P$13
B3
A3
P$4
GPIO13
EQEP2A
P$12
B4
A4
P$5
GPIO62
EQEP2B
P$11
B5
A5
P$6
GPIO63
EQEP2I
P$10
B6
A6
P$7
GPIO65
TITLE: LAUNCHXL-F28377S
Document Number:
BoosterPack Headers
REV:
1.1
Date: 6/22/2015 9:21:57 AM
Sheet: 6/6