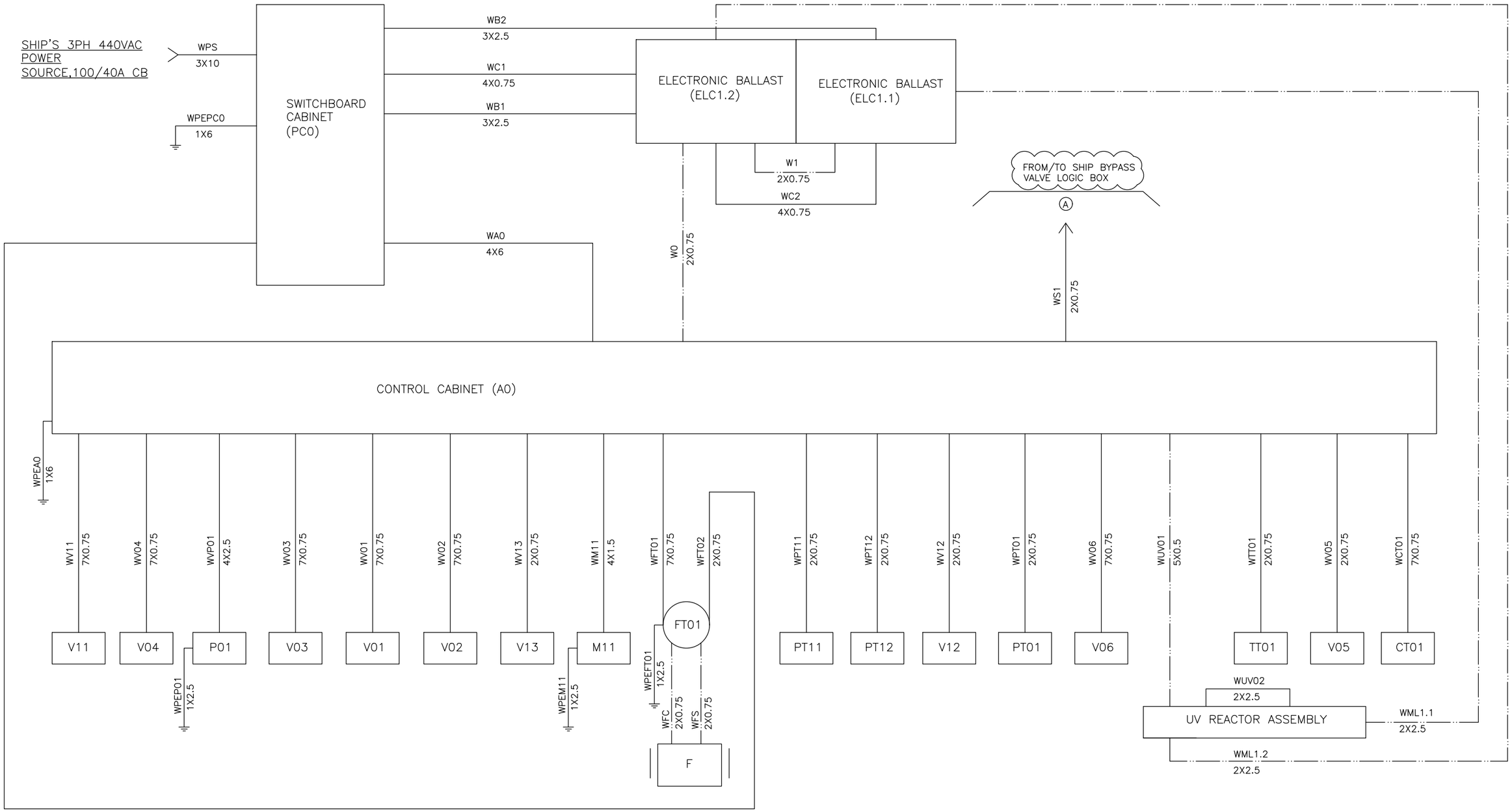

NOTES:

1) * CABLES AND CABLE GLANDS USED IN HAZARDOUS AREA SHALL BE IN COMPLIANCE WITH CLASS REQUIREMENTS.

2) CABLE USED SHOULD BE SHIPBOARD CABLES DESIGNED ACCORDING TO IEC 60092.FLAME RETARDENT ACCORDING TO IEC 60332-1-2 / 60332-3-22

3) HALOGEN FREE ACCORDING TO IEC 60754-1 & IEC 60754-2.FLEXIBLE INSULATING SLEEVING ACCORDING TO IEC 60684-2

4) OTHER EQUIVALENT AND APPROVED CABLES MAY BE USED.CABLE AREAS ARE CALCULATED WITH CORRECTION FACTOR 0.8. CODE DESIGNATIONS FOR CABLES OBTAINABLE THROUGH CABLE PRODUCERS NEXANS,SWEDEN.

5) RATED VOLTAGE OF POWER CABLES 0.6/1KV.RATED VOLTAGE OF INSTRUMENTATION CABLES MIN 150V

HARDWIRE

MAKER SUPPLY

REV	REMARKS	DWN	DATE
B	Issued for Approval	UNK	01/10/2024
A	Issued for Approval	UNK	23/09/2024

Goltens
Singapore Pte Ltd.

Electrical Block Diagram for BWTS

SCALE	NTS	OWNER	_		
DRAWN	UNK	YARD			
DATE	23/09/2024	CLASS	-	PROJECT NO.	1482
CHCKD.	MM	PROJECT NAME		DRAWING NO.	REV.
APPRD.	GC	JP 88 STORK		GSPL-P1482-EL-0002	B

SH. SZ. A3

NO. OF SHEETS 2

SH. NO. 1

NOTICE : This drawing and the information it contains are property of Goltens Singapore Pte Ltd. and may not be reproduced or used in part or in whole for any purpose exept by written permission of this company.

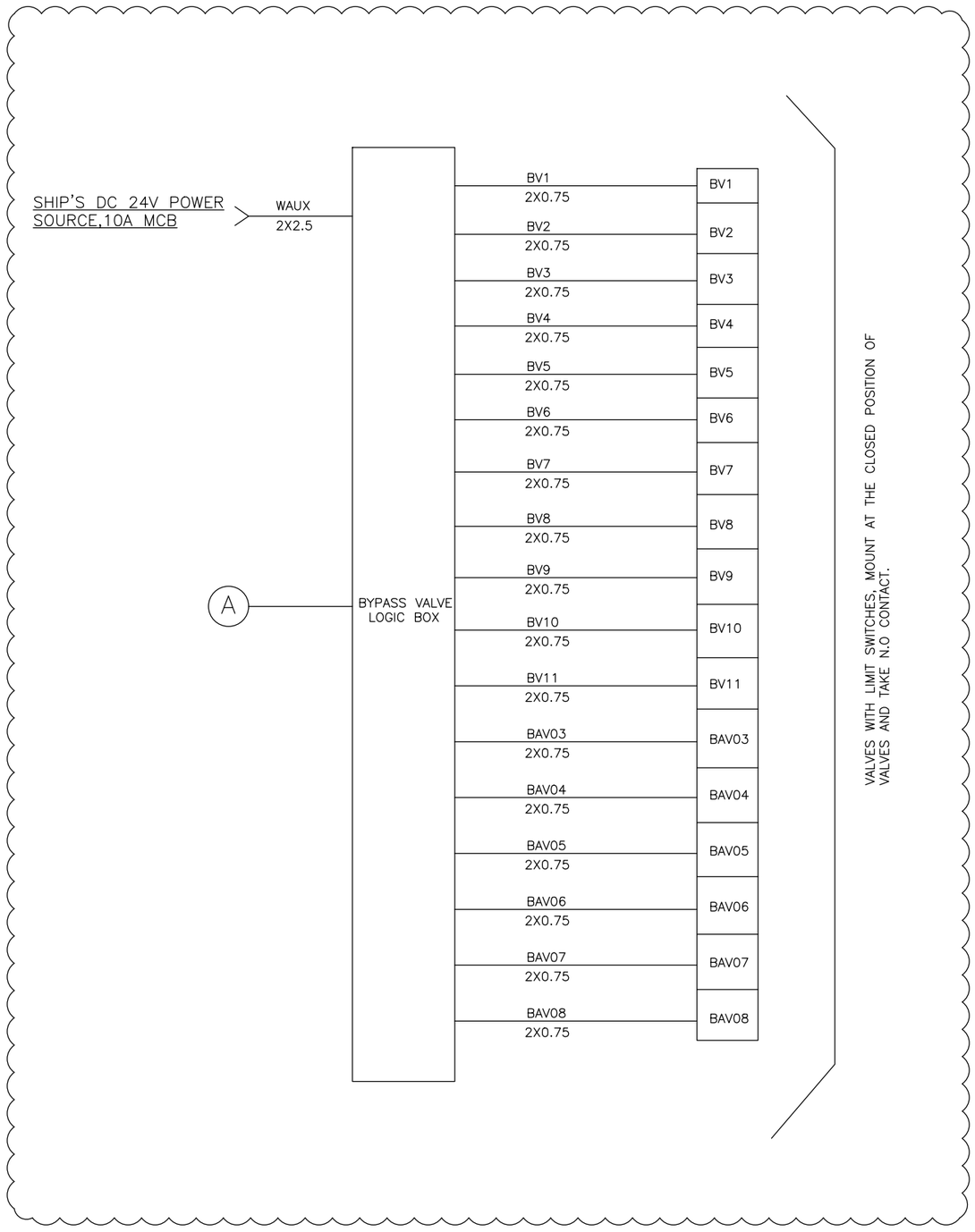

REV	REMARKS	DWN	DATE
B	Issued for Approval	UNK	01/10/2024
A	Issued for Approval	UNK	23/09/2024

Goltens
Singapore Pte Ltd.

Electrical Block Diagram for BWTS

SCALE	NTS	OWNER	_			
DRAWN	UNK	YARD				
DATE	23/09/2024	CLASS	-	PROJECT NO.	1482	
CHCKD.	MM	PROJECT NAME		DRAWING NO.		REV.
APPRD.	GC	JP 88 STORK		GSPL-P1482-EL-0002		B

SH. SZ. A3
NO. OF SHEETS 2
SH. NO. 2

NOTICE : This drawing and the information it contains are property of Goltens Singapore Pte Ltd. and may not be reproduced or used in part or in whole for any purpose exept by written permission of this company.