LEGEND

NO.	SYMBOL	DESCRIPTION
1	—Ⓐ	AUTHORIZATION KEY
2	—⦶—	VOLTAGE TRANSFORMER
3	(UV)	UNDERVOLTAGE RELAY
4	∩	MINIATURE CIRCUIT BREAKER
5	PLC	PROGRAMABLE LOGIC CONTROL

SYSTEM REQUIREMENT
1) TGI INTAKE DOWN. HFI INTAKE BACKUP.
2) XPI INTAKE DOWN. TGI INTAKE BACKUP.

FLOWCHART (LOGIC) (AC) FOR AUTO-DPP PANEL AT TGI

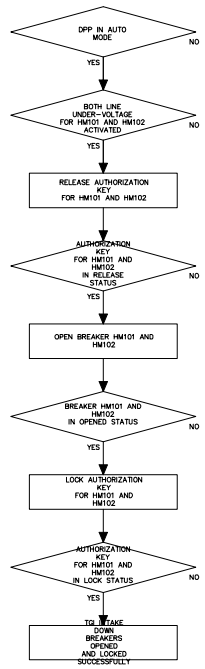

FLOWCHART (LOGIC) (AC) FOR AUTO-DPP PANEL AT TE25

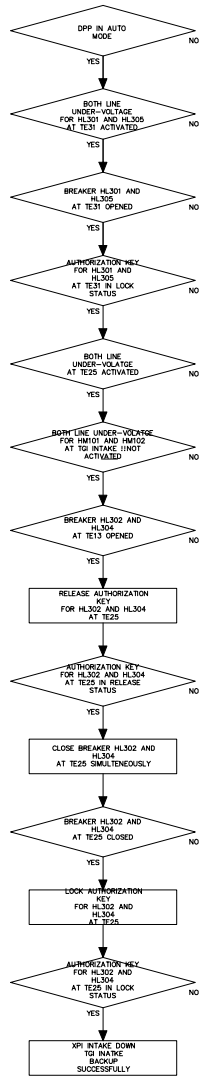

FLOWCHART (LOGIC) (AC) FOR AUTO-DPP PANEL AT TE31

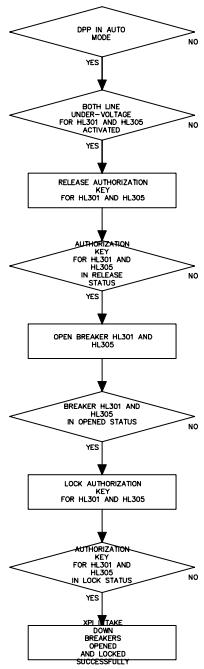

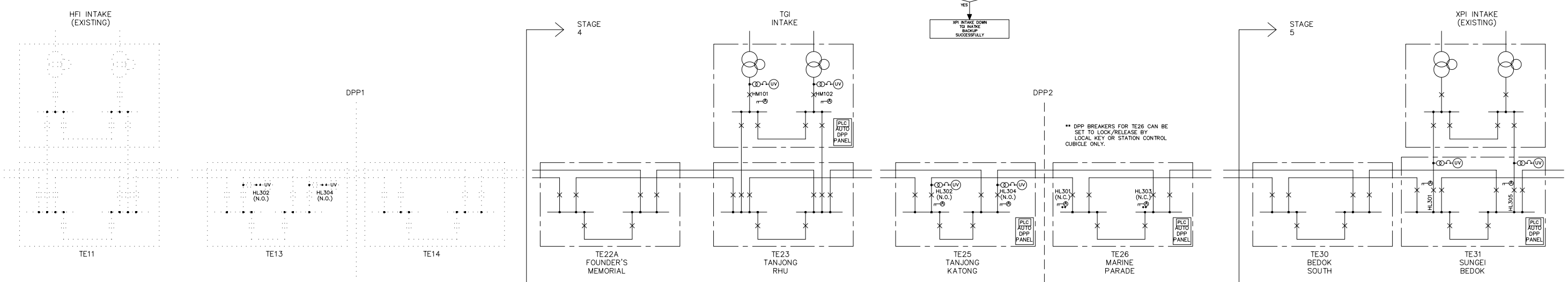

AUTO-DPP SYSTEM PHILOSOPHY

FINAL

NOTES:

REV.	DATE	DRAWN	DESCRIPTION	DESIGNED	CHECKED	APPROVED

QUALIFIED PERSON ENDORSEMENT:

PROFESSIONAL ENGINEER ELECTRICAL TAN PUA YONG 1463 SINGAPORE

LICENCE NO. 913198

LTA ENDORSEMENT:

CONTRACTOR: GUTHRIE ENGINEERING (S) PTE LTD / LSIS CO., LTD JOINT VENTURE CONSORTIUM
#04-00
SINGAPORE 389932
TEL: 67462222 FAX: 67462300

Land Transport Authority

PROJECT TITLE: POWER SUPPLY SYSTEM FOR THOMSON-EAST COAST LINE STAGE 4 AND 5

DRAWING TITLE: AUTO-DPP SYSTEM PHILOSOPHY

DESIGNED	CHECKED	APPROVED
ANU	TP YONG	ONG O.C.
SCALE	DRAWN	DATE
NTS	KOKO	7 JUL 20

DRAWING NO.: D/T253A/GEN/AUTO-DPP/001 | REV. – | SHEET 1

CAD FILENAME: | A3