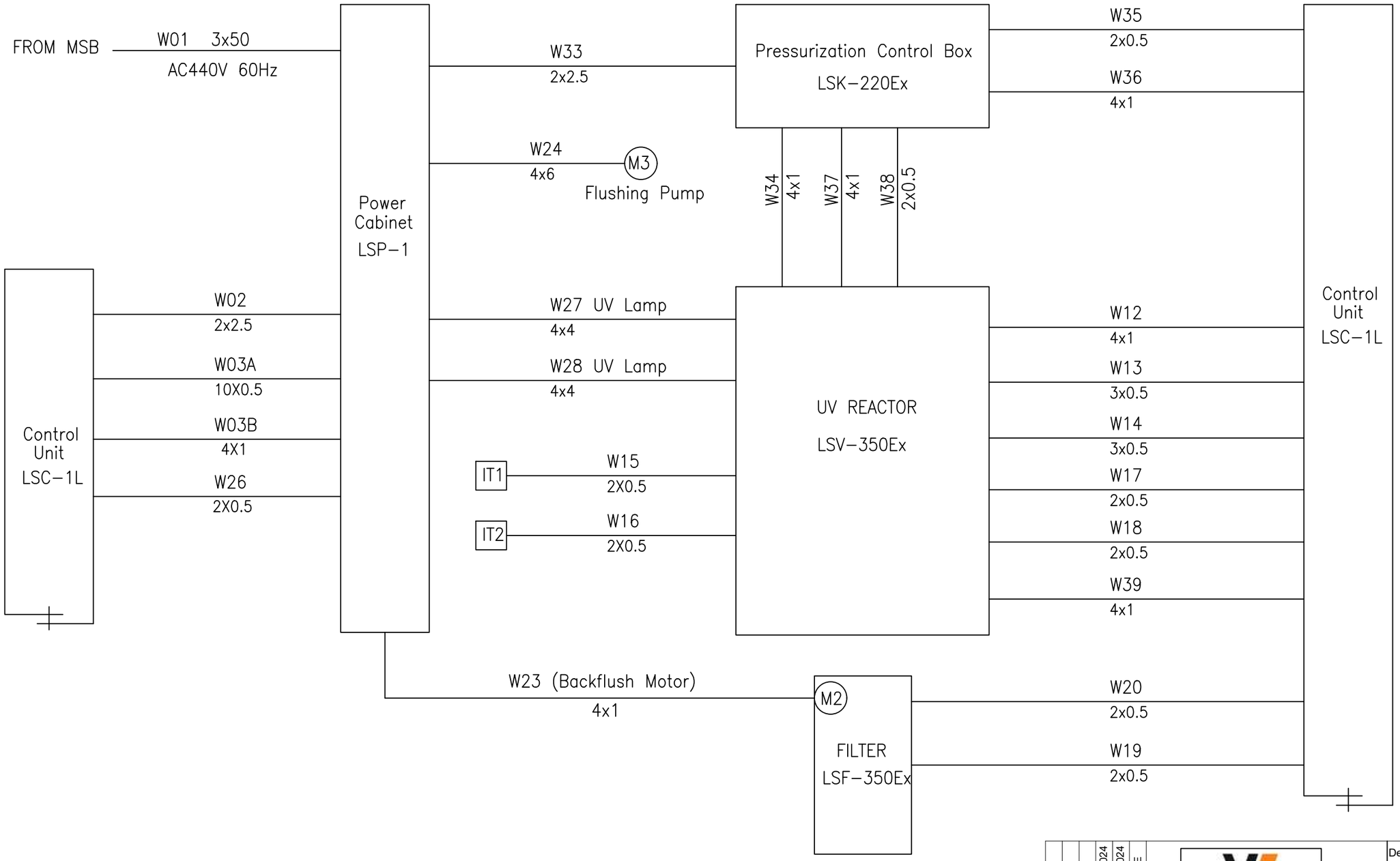

REV	REMARKS	DWN	DATE
B	Template Change	UNK	29/10/2024
A	Issued for Approval	UNK	26/10/2024

YFMARINE

Designed By: Goltens Singapore Pte Ltd.

Electrical Block Diagram for BWTS

SCALE	NTS	OWNER	_				
DRAWN	UNK	YARD					
DATE	26/10/2024	CLASS	-	PROJECT NO.	P1513		
CHCKD.	TT	PROJECT NAME			DRAWING NO.	REV.	
APPRD.	GC	ORKIM POWER			GSPL-P1513-EL-0002	B	

SH. SZ. A3

NO. OF SHEETS 2

SH. NO. 1

This drawing and the information it contains are property of Goltens Singapore Pte Ltd. and may not be reproduced or used in part or in whole for any purpose exept by written permission of this company.

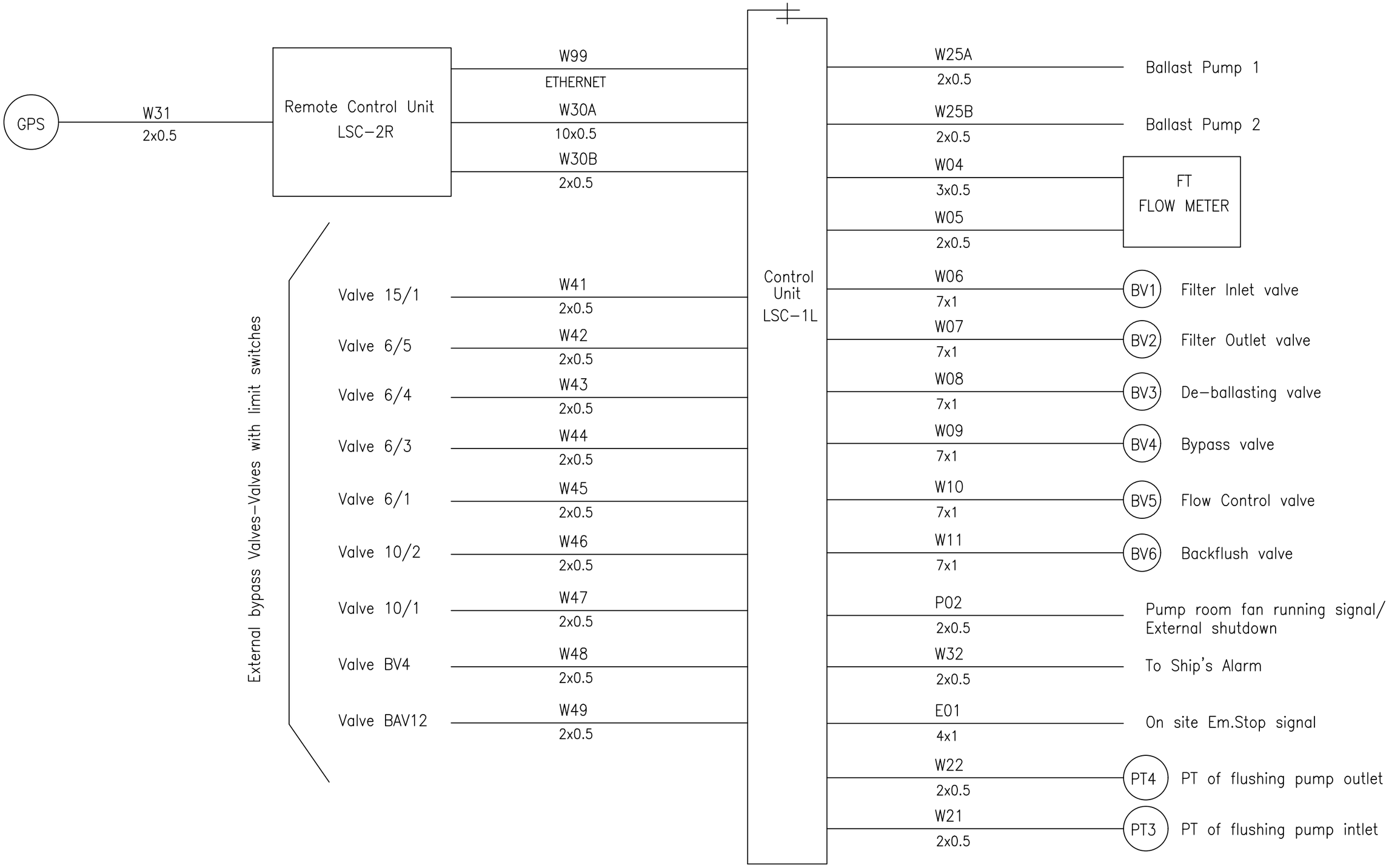
GPS
W31
2x0.5
Remote Control Unit
LSC-2R
W99
ETHERNET
W30A
10x0.5
W30B
2x0.5
External bypass Valves-Valves with limit switches
Valve 15/1
W41
2x0.5
Valve 6/5
W42
2x0.5
Valve 6/4
W43
2x0.5
Valve 6/3
W44
2x0.5
Valve 6/1
W45
2x0.5
Valve 10/2
W46
2x0.5
Valve 10/1
W47
2x0.5
Valve BV4
W48
2x0.5
Valve BAV12
W49
2x0.5
Control Unit
LSC-1L
W25A
2x0.5
Ballast Pump 1
W25B
2x0.5
Ballast Pump 2
W04
3x0.5
W05
2x0.5
FT
FLOW METER
W06
7x1
BV1
Filter Inlet valve
W07
7x1
BV2
Filter Outlet valve
W08
7x1
BV3
De-ballasting valve
W09
7x1
BV4
Bypass valve
W10
7x1
BV5
Flow Control valve
W11
7x1
BV6
Backflush valve
P02
2x0.5
Pump room fan running signal/
External shutdown
W32
2x0.5
To Ship's Alarm
E01
4x1
On site Em.Stop signal
W22
2x0.5
PT4
PT of flushing pump outlet
W21
2x0.5
PT3
PT of flushing pump intlet