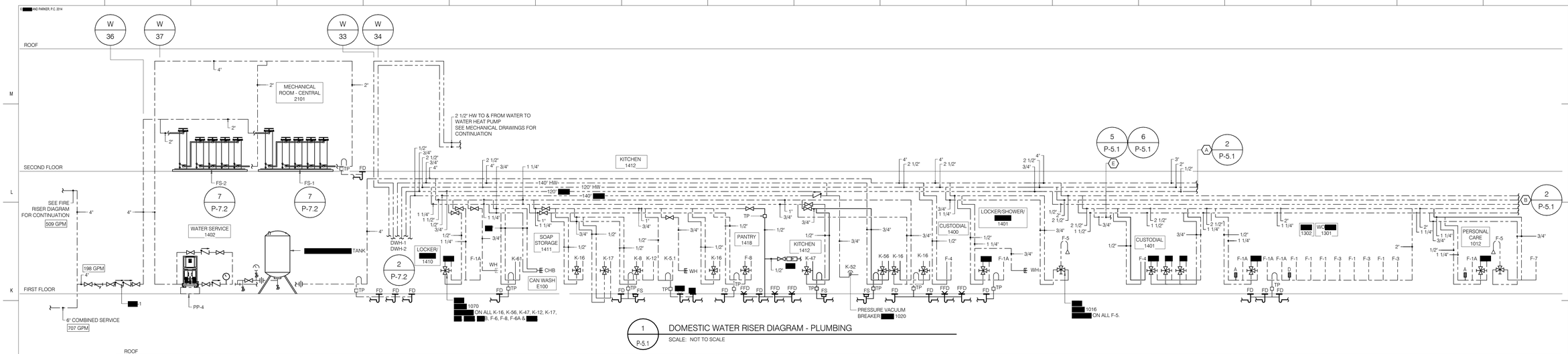

1 P-5.1 DOMESTIC WATER RISER DIAGRAM - PLUMBING

SCALE: NOT TO SCALE

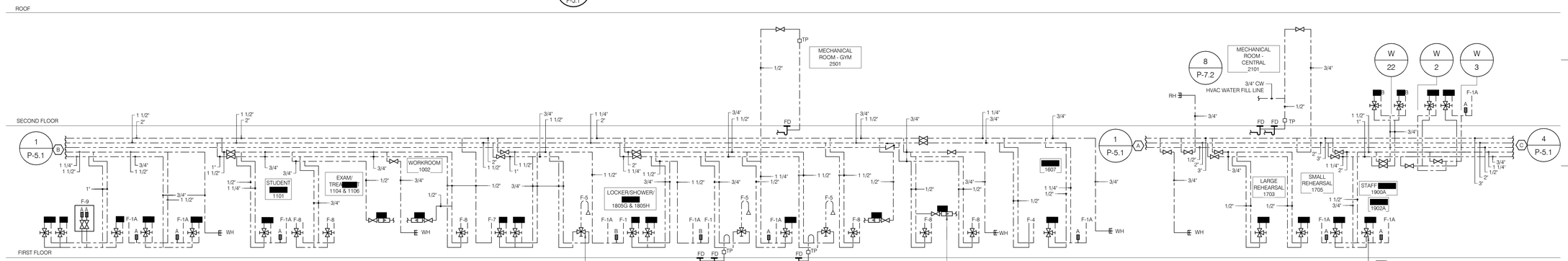

2 P-5.1 DOMESTIC WATER RISER DIAGRAM - PLUMBING

SCALE: NOT TO SCALE

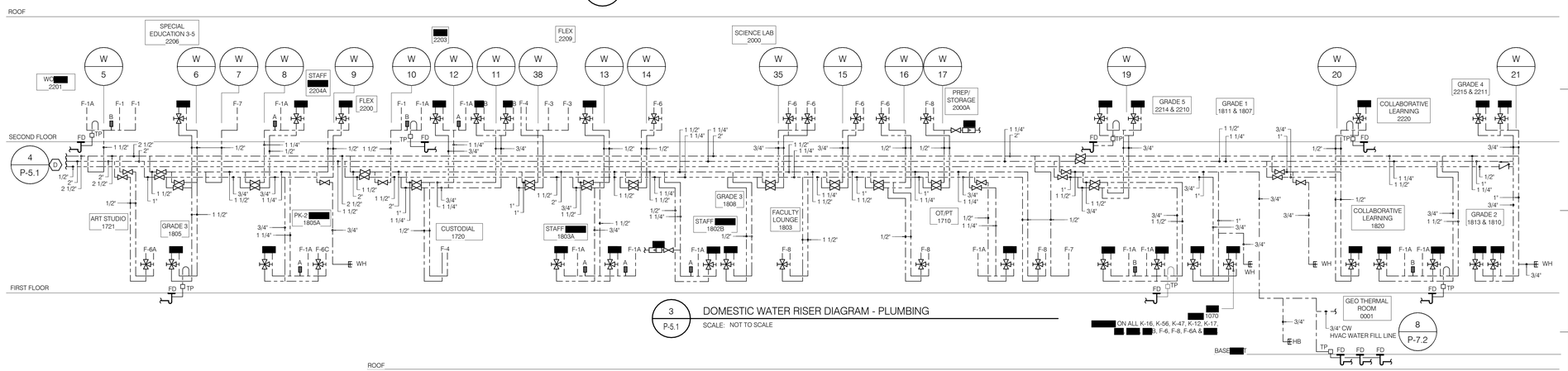

3 P-5.1 DOMESTIC WATER RISER DIAGRAM - PLUMBING

SCALE: NOT TO SCALE

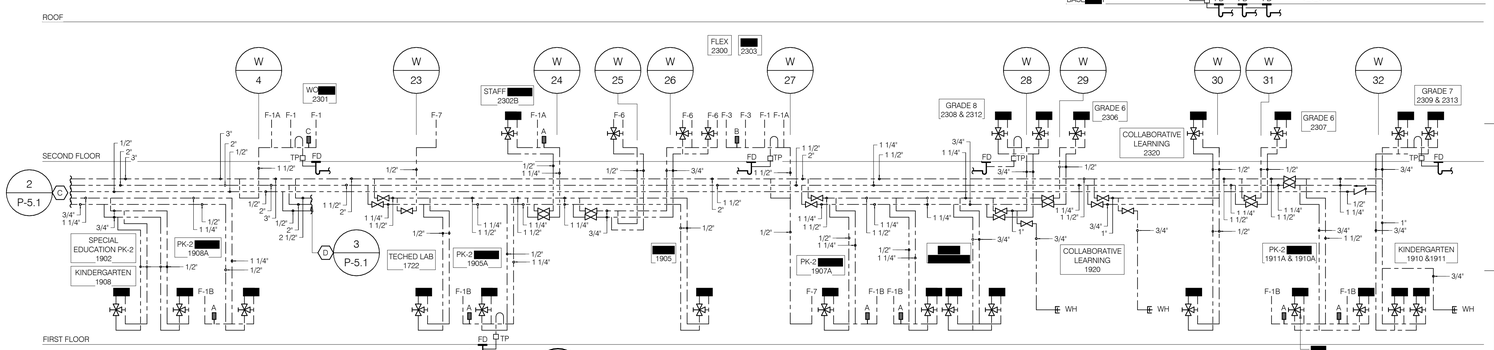

4 P-5.1 DOMESTIC WATER RISER DIAGRAM - PLUMBING

SCALE: NOT TO SCALE

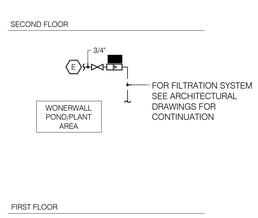

6 P-5.1 PARTIAL DOMESTIC WATER RISER DIAGRAM - GRACELAND

SCALE: NOT TO SCALE

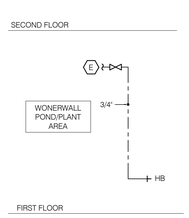

5 P-5.1 PARTIAL DOMESTIC WATER RISER DIAGRAM - HOLABIRD

SCALE: NOT TO SCALE

SETTY
ONE SOUTH STREET, SUITE 1110
BALTIMORE, MARYLAND 21202
410-539-6035
MEP/FP DESIGN • CONSULTING • CODE ENGINEERING
ENERGY MANAGEMENT • COMMISSIONING
CERTIFIED IN COLUMBIA, MARYLAND
DISTRICT OF COLUMBIA, MARYLAND
www.SETTY.com
SACOTY#####

GRIMM AND PARKER
11720 Beltsville Drive
Suite 600
Calverton, MD 20705
301.595.1000
www.grimmandparker.com
GP# 21553

PLUMBING DOMESTIC WATER RISER DIAGRAM

LAND

DATE	DESCRIPTION

P-5.1

03/13/2017
BID SET

© GRIMM AND PARKER, P.C. 2014