AgeGAN - Age Progression/Regression and Estimation

Team Members:

1. **Anwesan Pal**
2. **Zhihang Ren**
3. **Jie Guo**

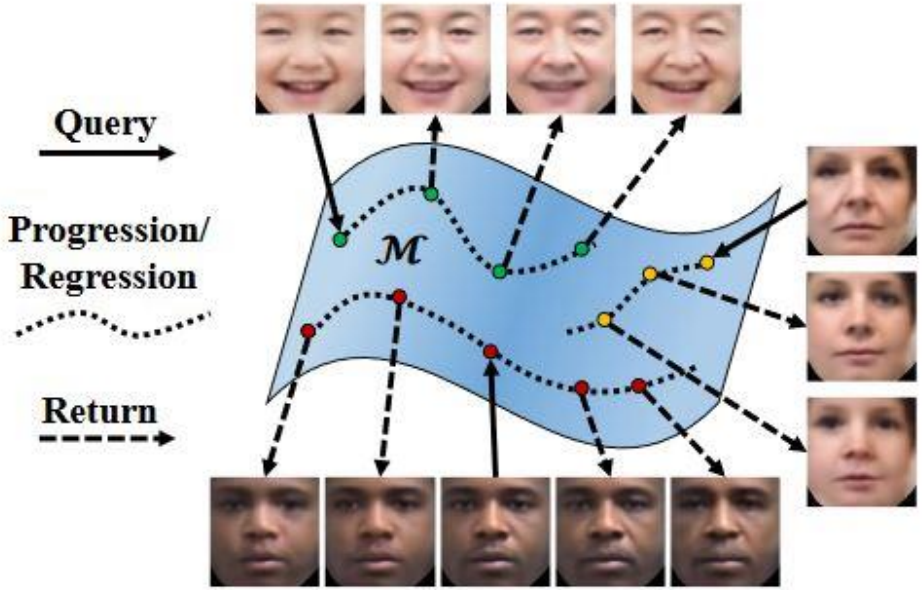

Outline

- Introduction
- Prior Work
  - Encoder-Decoder Mechanism
  - Generative Adversarial Networks
  - Convolutional Neural Networks
- Implementation
- Results
- Our contribution
- Conclusion and future work

Age Progression/Regression: Motivation

- Progression – Prediction of future looks
- Regression – Estimation of past appearances

Applications:

- Forensic Sciences

  e.g. face prediction of wanted/missing person
- Identity documentation

  e.g. age-invariant verification
- Entertainment

  e.g. "how did you look as a child, grandpa!"

Age Progression/Regression: Challenges

- **Variation in features** of face image – *expression, pose, resolution etc.*
- **Large dataset** required with images from all age groups
- **Correct annotation** of dataset
- **Progression** generally **easier** than Regression

Prior Work

- **Encoder Decoder Mechanism** – mapping onto a smaller subspace highlighting important features

- **GANs:**

i. Generator – generates images
ii. Discriminator – evaluates generated images for authenticity

- **CNNs** – means of features extraction

Z. Zhang et al. "Age Progression/Regression by conditional adversarial autoencoder", CVPR 2017

Implementation

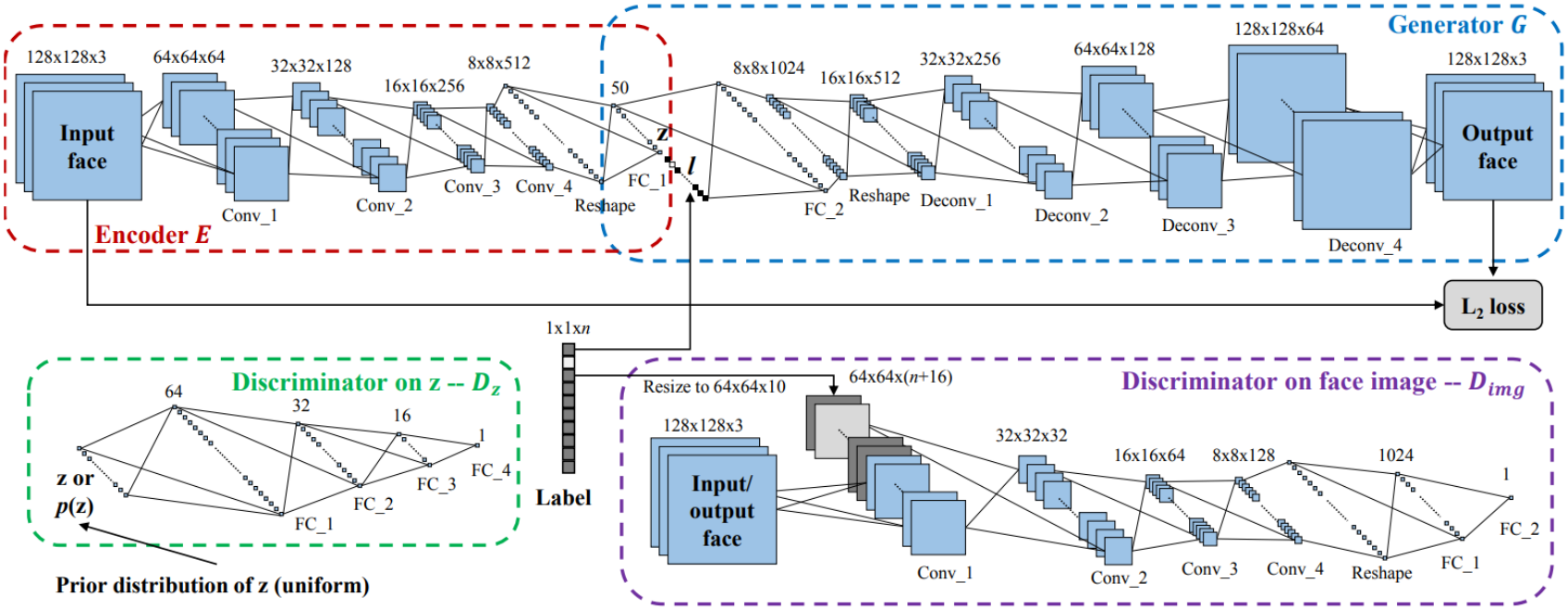

- Min-max loss function for GAN
- L_2 loss function between input and output images

Results

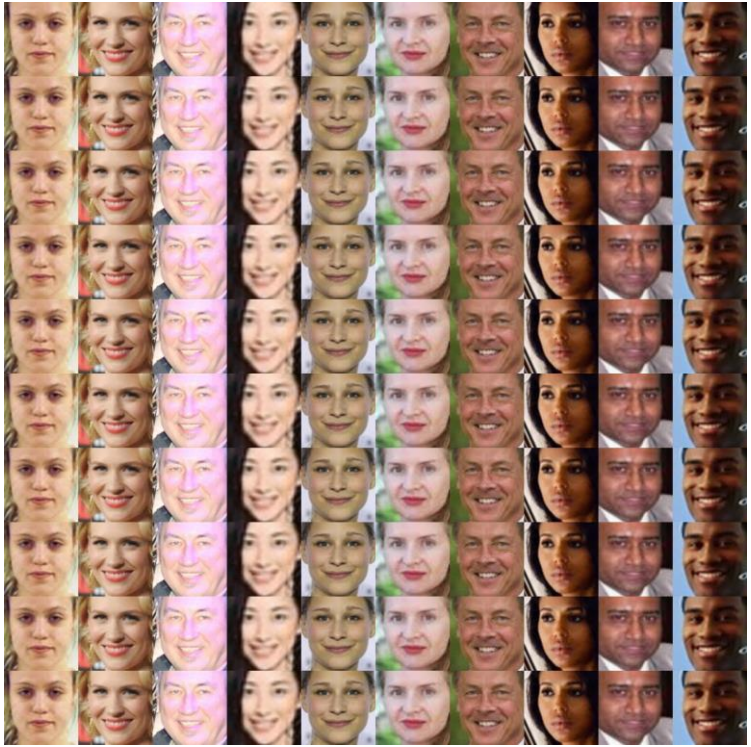

Input Image

Output after 50 epochs

Results

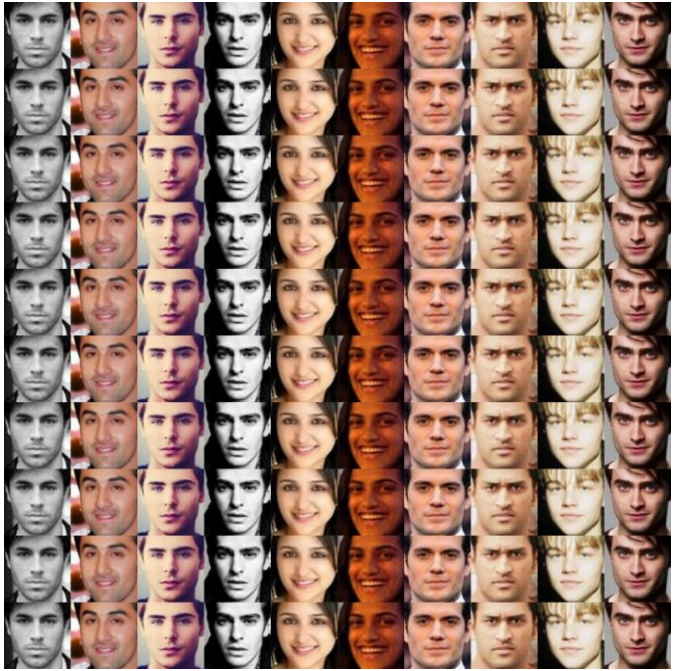

Input Test Image

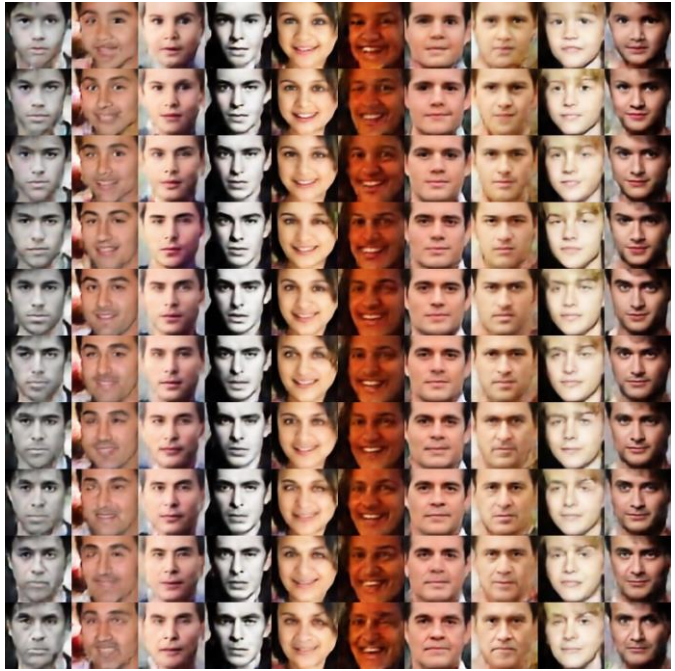

Output Test Image

Our Contribution

Age Estimation by finding highest cross-correlation coefficient between input and output

Normalized cross correlation is given by:

$$\gamma(u,v) = \frac{\sum_{x,y}\left[f(x,y) - \overline{f}_{u,v}\right]\left[t(x-u,y-v) - \overline{t}\right]}{\left\{\sum_{x,y}\left[f(x,y) - \overline{f}_{u,v}\right]^2 \sum_{x,y}\left[t(x-u,y-v) - \overline{t}\right]^2\right\}^{0.5}}$$

where

- f is the image.
- $\overline{t}$ is the mean of the template
- $\overline{f}_{u,v}$ is the mean of $f(x,y)$ in the region under the template.

Our Contribution

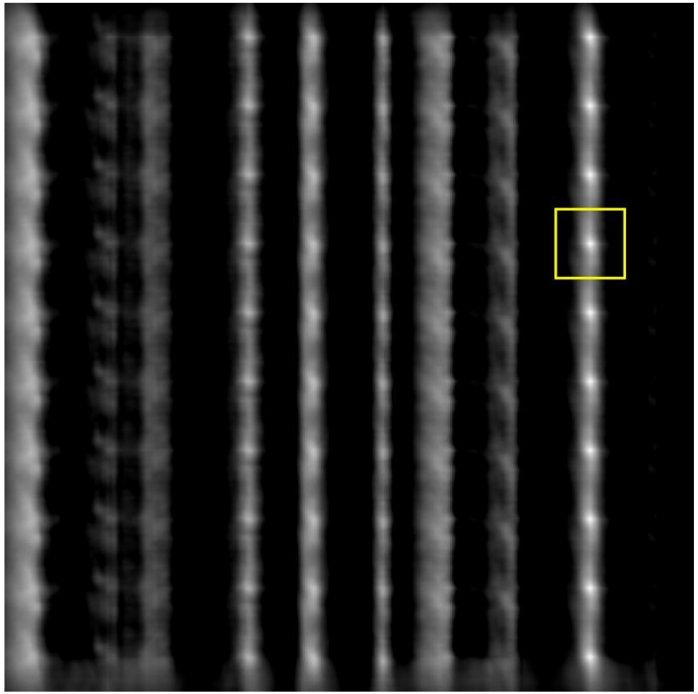

Our Contribution – Age Prediction

Our Contribution – Age Prediction

Conclusion and Future Work

Tasks accomplished:

- Age Progression/Regression for 10 different age groups
- Age Estimation without labeling

Possible directions for future work:

- Above tasks end-to-end
- More robust to different input images

Thank you for your attention!