AgeGAN: Age Progression/Regression and Estimation

Zhihang Ren*
zhr010@ucsd.edu
A53233743

Jie Guo*
jig179@eng.ucsd.edu
A53244211

Anwesan Pal*
a2pal@eng.ucsd.edu
A53238356

***Abstract*—"If I get you a photo of a man, can you guess what he was/ will be like during his lifetime and predict his age in this photo?" You will probably say "It is impossible!". Nowadays, many existing face aging works aim to learn transformation between age groups. The works use images that are labeled with ages. In this report, we try to build a generative model to generate images of a person of desired age. We call it AgeGAN. We also use convolution method to estimate the age group of the input images. For input images, first we use conditional adversarial autoencoder that learns a face manifold. For this step, the images first map to latent vectors through a convolutional encoder, and then the vectors are selected by the deconvolutional generator conditionally and projected to the face manifold. The latent vectors are face features and the age condition determines progression and regression. Two adversarial net-works are imposed on the encoder and generator, respectively, to generate more photo-realistic faces. Our work is a slight extension of the existing work on Age Progression/Regression [1]. We extend its work to not only give the projected age modifications to the input image but also predict its age group. This can be a very inexpensive method to give age estimation of a person as it jut requires an image with no labeling at all. We even tested it on a custom made image of ourselves and the results obtained were pretty impressive.**

***Index Terms*—GANs, Encoder-Decoder, Manifold-Learning, Convolutional Neural Networks, Machine Learning**

I. Introduction

Over the recent years, face age progression and regression have been widely studied. *Progression* stands for the prediction of future looks while *Regression* means estimation of past looks. The logic of these two operations is quite simple: we try to get face images with different age effects while still maintaining the personalized features of the face (i.e. personality). To some extent, this study is very meaningful, e.g., age prediction, face prediction of missing person, face recognition, etc. However, it is not easy to realize our thoughts. The main challenge comes from the rigid requirement to the training data. Most existing works require paired data samples, i.e., face images of the same person of various ages over life span. The quantity of images is also a problem, because even the largest face dataset is not large enough to produce good results. Moreover, existing works also need the images to be labeled with ages, which is really not easy to get. These existing works will divide the samples into different age groups and learn how to transform among these groups, therefore, true age label is very essential to the network.

Compared to age progression, age regression is harder to achieve good performance at. The performance is especially poor when rendering baby face, because the existing works are surface-based models that simply remove features of the input images [2]. However, great progress on age progression has been made by researchers. For example, the physical model-based methods parametrically model biological facial change with age, e.g., muscle, wrinkle, skin, etc. However, the methods need larger dataset to cover longer span of age and are very time consuming when it come to the training part. While some can preserve personality but produce severe ghosting artifacts, others smooth out the ghosting effect but lose personality.

In this report, we do research on the age progression/regression problem with generative modeling. Recently, Generative Adversarial Networks (GANs) has shown wonderful results in human face image generation [3]. We use the idea of manifold in this paper, and we assume that face images lie on this high-dimensional manifold as shown in Fig1. With age changing, we can get new images by controlling the age attributes while still preserving personalities. We build a conditional adversarial autoencoder (CAAE) network to learn the face manifold. By using this idea we can achieve age progression and regression at the same time easily. As we all know, it is difficult to manipulate on the high-dimensional manifold, so we mapped the image to a latent vector for dimensionality reduction. We use a convolutional encoder to do the dimensionality reduction, and then the vector is projected to the face manifold c on certain age period through a deconvolutional generator. Additionally, two adversarial networks are imposed on the encoder and generator, respectively, aiming to generate more realistic faces.

Our contribution in order to extend this work has been to give an estimated age group prediction, depending on how well the features obtained on the output image match well with the given input image.

II. Related works

A. Age Progression and Regression

Recently, age progression problems have been extensively studied. For most cases, the methods can be split into two categories, physical model-based and prototype-based. Physical model-based methods model the biological pattern and simulate the aging mechanism such as the muscles [4], the wrinkles [5], [6], the facial structure [7], [8] etc. However, in order to model the mechanism in detail, a large dataset of faces with long age span of each individual is required, which is impossible to obtain. Moreover, running physical model-based methods is time consuming.

*All the authors contributed equally to the work.

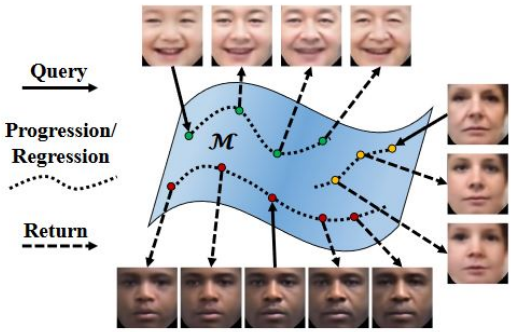

Fig. 1: We assume the face images lie on a manifold (M), and images are clustered according to their ages and personality by a different direction. Given a query image, it will first projected to the manifold, and then after the smooth transformation on the manifold, the corresponding images will be projected back with aging patterns

For the prototype-based methods [9], [10], faces are usually divided into groups via age. And the features extracted from each group, e.g. the average faces, are treated as prototypes. Then, the differences between each prototype are considered to be the aging patterns of the mechanism. However, using such statistical prototypes, the popularity of the faces may be maintained, but losing the personality. [11] proposed a dictionary learning based method which converts the age pattern learning into the sub-dictionary learning. A given face will be decomposed into age pattern and personal pattern. To get an aged face, a target age pattern is produced by the sub-dictionaries. Then, by synthesizing the target age pattern and personal pattern, the aged face could be generated. However, due to the averaging effect, a strong ghosting effect will occur. The deep learning model [12] represents the state-of-art, where the RNN is used to predict the coefficients on each eigenfaces for age pattern transition. Moreover, the prototype-based methods require the true label for each face which is not convenient. Besides, these learning processes are unidirectional which focus on progression, i.e. from younger face to older ones. For the reverse direction, the network need to retrain in a reverse manner.

Face age regression, which is the reverse version of progression, is relatively more challenging. Most algorithms [13], [2] are based on physical model where the model learns the transformation of face images and just removes the some face features from the original face e.g. wrinkles. Thus, the final result would not be realistic.

The benefits of the CAAE can be shown as following. First, the network does not require paired samples in the training data or labeled face in the test data. Second, our network realize age progression and regression.Third, the separatation of age and personality in the latent vector space helps keeping personality while avoiding the ghosting artifacts. Finally, CAAE is robust against variations in pose, expression, and occlusion.

B. Generative Adversarial Network

Generating visually realistic images has not been much successful until the emergence of the generative adversarial network (GAN). The original GAN work [14] introduced a novel architecture for training generative models. Basically, it simultaneously trains two models: 1) the generative model G which captures the distribution of the training data and tries to imitate the images in the training data, and 2) the discriminative model D which discriminates the imitated samples from the real training data. G and D compete with each other using a min-max game as shown in Eq 1, where z denotes a vector randomly sampled from certain distribution $p(\mathbf{z})$ and the data distribution is $p_{data}(\mathbf{x})$. In the training procedure, the G and D are trained alternatively.

$$\begin{aligned}\min_G \max_D \mathbb{E}_{x\sim p_{data}(\mathbf{x})}[\log D(\mathbf{x})]+ \\ \mathbb{E}_{z\sim p(\mathbf{z})}[1-\log D(G(\mathbf{z}))]\end{aligned} \tag{1}$$

However, GAN is facing a great challenge. The training process is unstable, which makes the output of the generator G noisy and uninterpretable. Recent years, many works [15], [16], [17], [18], [19], [20], [21] have been done to improve the original GAN. DCGAN [15] proposed to use deconvolutional and convolutional neural networks to implement the generator G and discriminator D and provided useful advices to stabilize a GAN, such as replacing the pooling by strides convolution and using batch normalization. CGAN [16] changed the unsupervised learning into semi-supervised learning by introducing a conditional variable into the data. [19], [20] bring in the sequential or pyramid model to the GAN to solve the resolution problem. And some GAN-related works [15], [21], [22], [23], [3] have shown the great ability of generating the faces with randomness. However, all these generating methods produces images from random noise, which is not controllable. Thus, they could not be used in the age progression/regression task, which should respond according to the query.

III. Face Manifold

We assume that the faces lie on a high dimensional manifold, where traversing along certain direction could maintain the personality while changing the age as the age progression/regression task does. However, learning and manipulating the high dimensional manifold is, to some extend, difficult to realize. Therefore, we propose to learning the mapping between the high dimensional manifold and a low dimensional space (let's say it the latent space), where manipulating is easier. As shown in Fig 2, faces x_1 and x_2 are mapped onto the latent space by an encoder E, which will extract the personality z. On the latent space, concatenating with the age l, the faces are represented by two point $[z_1, l_1]$ and $[z_2, l_2]$. Note that the personality z and the age l are orthogonal in the latent space, which means we could maintain one factor while changing the other one. Starting from the red rectangle point $[z_2, l_2]$ and traversing along the age axis, we could obtain a series of new points which corresponds to x_2. Using another mapping G, we could map those new points back onto

the high dimensional manifold and obtain a series of faces corresponding to x_2, which presents the age progression and regression of x_2. Similarly, we could get the age progression and regression of x_1 by traversing the green rectangle point along the age axis. However, if we make the movement along the dotted line in the latent space, both the personality and the age would change and it would influence the result on the manifold finally. For the training procedure, we will learn the mapping E and G to ensure the generated faces lie on the manifold and consequently ensure the generated image be realistic and plausible for a given age.

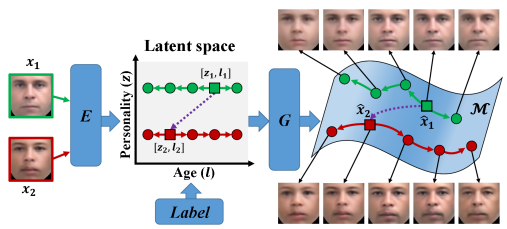

Fig. 2: Illustration of traversing on the face manifold $\mathcal{M}$. The face inputs x_1 and x_2 are encoded to z_1 and z_2 by an encoder E. Concatenate with the age l_1 and l_2, the two faces are represented by the green rectangle point $[z_1, l_1]$ and the red one $[z_2, l_2]$ in the latent space. The color indicates the personality. And the arrows and circles indicate the traversing direction and the steps. Solid arrows allow the traversing along the age axis with the personality preserved, while the dotted arrow indicates the traversing crossing the personality and the age axes. The traversing in the latent space is then mapped onto the manifold by a generator G, as illustrated with the corresponding points and arrows. Each point on the manifold represents a face, consequently realizing the age progressing and regression.

IV. Implementation

A. Conditional Adversarial Autoencoder

The detailed structure of the conditional adversarial autoencoder (CAAE) network is shown in Fig 3, where the input and output images are 128×128 RGB images, i.e. $x \in \mathbb{R}^{128\times128\times3}$. At the first stage, a traditional convolutional neural network is adopted as the latent space encoder E. At each layer, convolutions of stride 2 are applied. The output $E(x) = z$ captures the personality of individuals. Additionally, a discriminator D_z is engaged to force the distribution of the output z approximately uniform. Then concatenating the one hot age label l with the latent vector z, the generator G will produce a output face $G(z, l)$. At last, the discriminator D_{img} will judge if the produced face is realistic and plausible. Unlike other GAN architectures, the AgeGAN could sample the latent vector according to the personality and the age, which means it is controllable rather than random.

B. Objective Function

The output faces and the real faces should lie on the face manifold. Moreover, the output face $G(z, l)$, given encoded personality feature and the age label, is expected to be similar as the real image while training. Thus, a L2 norm is used to estimate the difference in the vector space, shown in 2.

$$\min_{E,G} ||x - G(E(x), l)||_2^2 \tag{2}$$

At the same time, the distribution of the latent vector z is expected to be uniform. A discriminator D_z is utilized to achieve this goal. Denote the training data distribution as $p_{data}(x)$, then the distribution of z should be $q(z|x)$. Assume the prior of z be $p(z)$ and $z^* \sim p(z)$ indicates the random sample process from $p(z)$. Then a min-max strategy could be used to train E and D_z.

$$\begin{aligned}\min_{E} \max_{D_z} &\mathbb{E}_{z^*\sim p(\mathbf{z})}[\log(D_z(z^*))]+ \\ &\mathbb{E}_{x\sim p_{data}(\mathbf{x})}[\log(1 - D_z(E(x)))]\end{aligned} \tag{3}$$

Similarly, the face discriminator D_{img} and the generator conditioned on l could be trained as follow.

$$\begin{aligned}\min_{G} \max_{D_{img}} &\mathbb{E}_{x,l\sim p_{data}(\mathbf{x},\mathbf{l})}[\log(D_{img}(x, l))]+ \\ &\mathbb{E}_{x,l\sim p_{data}(\mathbf{x},\mathbf{l})}[\log(1 - D_{img}(G(E(x), l)))]\end{aligned} \tag{4}$$

Finally, combining all the object function above, the total object function is shown below.

$$\begin{aligned}\min_{E,G} \max_{D_z,D_{img}} &\lambda||x - G(E(x), l)||_2^2 + \gamma TV(G(E(x), l))+ \\ &\mathbb{E}_{z^*\sim p(\mathbf{z})}[\log(D_z(z^*))]+ \\ &\mathbb{E}_{x\sim p_{data}(\mathbf{x})}[\log(1 - D_z(E(x)))]+ \\ &\mathbb{E}_{x,l\sim p_{data}(\mathbf{x},\mathbf{l})}[\log(D_{img}(x, l))]+ \\ &\mathbb{E}_{x,l\sim p_{data}(\mathbf{x},\mathbf{l})}[\log(1 - D_{img}(G(E(x), l)))]\end{aligned} \tag{5}$$

where $TV(\cdot)$ denotes the total variation which is effective in removing the ghosting artifacts. And the coefficients λ and γ balance the smoothness and high resolution.

V. Age Estimator

After fine-tuning the model, the discriminator could not be utilized to estimate the age due to the participant of the age condition l during training. Directly removing the parameter from the architecture requires retraining the model, which is time consuming. Thus, we adopt a traditional way of pattern recognition, i.e. by using the normalized cross-correlation of the given pattern (the query face) and the target faces (the generated faces).

Given the test image, the generator of the AgeGAN could produce a series of faces in different age ranges. By using the input image as a template, we perform normalized cross correlation between it and the output image generated. The normalized cross-correlation was performed according to the formula in Fig.4.

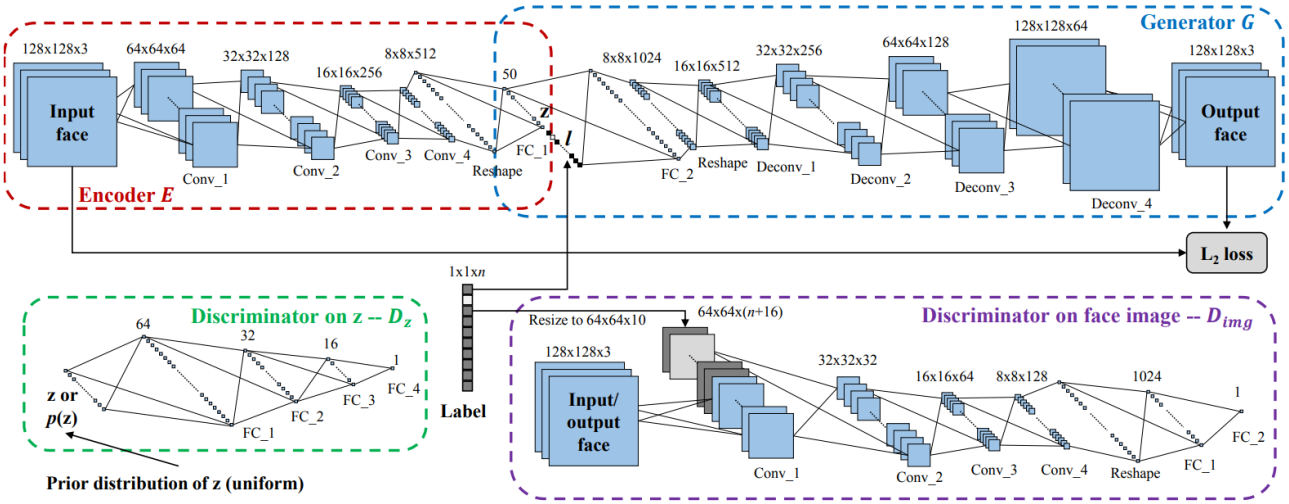

Fig. 3: Structure of the CAAE network for age progression/regression.

$$\gamma(u,v) = \frac{\sum_{x,y}\left[f(x,y)-\overline{f}_{u,v}\right]\left[t(x-u,y-v)-\overline{t}\right]}{\left\{\sum_{x,y}\left[f(x,y)-\overline{f}_{u,v}\right]^2\sum_{x,y}\left[t(x-u,y-v)-\overline{t}\right]^2\right\}^{0.5}}$$

where

- f is the image.
- $\overline{t}$ is the mean of the template
- $\overline{f}_{u,v}$ is the mean of $f(x,y)$ in the region under the template.

Fig. 4: Formula of the normalized cross-correlation function. The variables used and what they stand for have been explained

Subsequently, we found the location of the highest firing of the cross-correlation. By mapping that location to the age label, we were able to get an estimate of the age group of a person. The Results section will have our images.

VI. Results and Discussion

The dataset which we used to train was the UTK Face dataset. It contains 23,708 images from various age groups of an average life-span of a human being. The images carry the labels in their name. The label contains information about the *age*, *gender* and *race* of the subject. For the training section, we don't use the whole dataset. We randomly selected 10 images of celebrities from the dataset and kept it aside for testing. The remaining images formed our training set. The training process can be divided into mainly 3 parts. First, we train the auto encoder network to get latent vectors. To these, we add the age label and send the concatenated vector to the generator. Then we train we generator to create reasonable images of various age groups. These generated images are then sent to the discriminator to judge their authenticity. This goes on in loops like a traditional *Generative Adversarial Network*. We train the model for 50 epochs. From Fig 5, we can see the loss of our network decreases during the training, which means our method gives meaningful results.

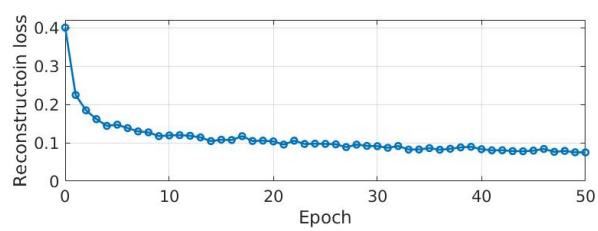

Fig. 5: Loss during training

A sample of the training set is reflected in Fig 7. The results of the network after 50 epochs of training are seen in Fig 8. As we go down the rows, the age label is increasing.

At the end of the training process, we tested the 10 images which we set aside earlier. We removed the labels from these images and just gave the raw image as input as in Fig 9. Our trained model gave the output as shown in Fig 10. Thus, we can see that our network has successfully been able to do both age progression and regression.

After obtaining the age progression and regression results, the correlation was computed between the output sequences and the input image as template. One example output is shown in Fig 6, the block which contains the maximum correlation result is highlighted by a bounding box. According to the correspondence between the age label and the location, the estimate of the age was found out.

The results of our *Age Estimator* on the 10 test images is shown in Fig 11. In order to test the power of our estimator, we tried to test it on some of our own images, as shown in Fig 12. We could see among all the images, the estimation results are quite good. Most results fall into the right age range.

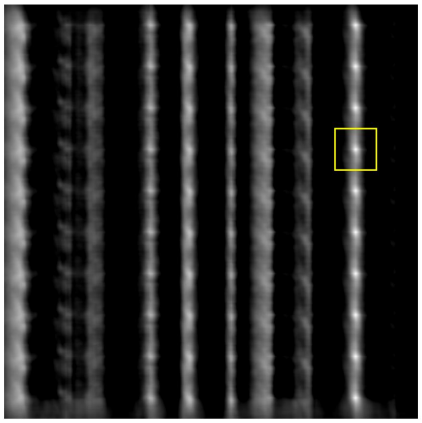

Fig. 6: The result after computing the correlation of the output with the query image template

VII. Future Scope

Due to the structure of the CAAE, the discriminator could not be transfered directly to any classification tasks (the age label is mixed in the network). And the estimation part is independent of the main networks. For the future works, an end-to-end framework will be considered. Another aspect which we are thinking about incorporating into this work is to make the model more robust. Right now, when we test the model on some of our own images, we get pretty poor results, mainly distortion and blurry effect. If we try to pre-process the input images by aligning them, the results are somewhat improved but still not very good. So, we aim to make our algorithm more adept at facial recognition and personality mapping.

Appendix

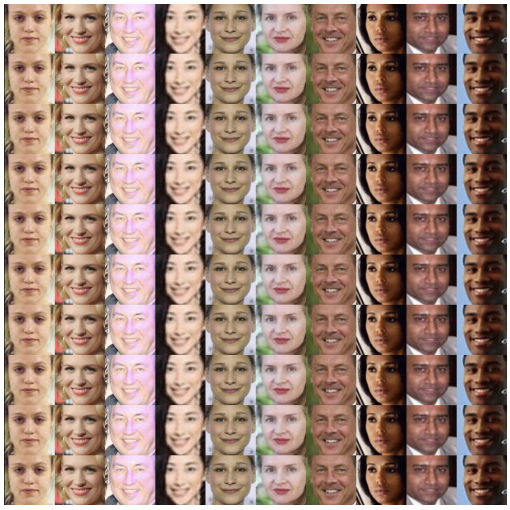

Fig. 7: Training input image

Fig. 8: Training output image

Fig. 9: Testing input image

Fig. 10: Testing output image

Fig. 11: The age estimation result for the training data

Fig. 12: The age estimation result for our data

REFERENCES

[1] Z. Zhang, Y. Song, and H. Qi, "Age progression/regression by conditional adversarial autoencoder," *CoRR*, vol. abs/1702.08423, 2017. [Online]. Available: http://arxiv.org/abs/1702.08423

[2] Y. Fu and N. Zheng, "M-face: An appearance-based photorealistic model for multiple facial attributes rendering," *IEEE Transactions on Circuits and Systems for Video technology*, vol. 16, no. 7, pp. 830–842, 2006.

[3] M.-Y. Liu and O. Tuzel, "Coupled generative adversarial networks," in *Advances in neural information processing systems*, 2016, pp. 469–477.

[4] J. Suo, X. Chen, S. Shan, W. Gao, and Q. Dai, "A concatenational graph evolution aging model," *IEEE transactions on pattern analysis and machine intelligence*, vol. 34, no. 11, pp. 2083–2096, 2012.

[5] N. Ramanathan and R. Chellappa, "Modeling shape and textural variations in aging faces," in *Automatic Face & Gesture Recognition, 2008. FG'08. 8th IEEE International Conference on*. IEEE, 2008, pp. 1–8.

[6] J. Suo, S.-C. Zhu, S. Shan, and X. Chen, "A compositional and dynamic model for face aging," *IEEE Transactions on Pattern Analysis and Machine Intelligence*, vol. 32, no. 3, pp. 385–401, 2010.

[7] N. Ramanathan and R. Chellappa, "Modeling age progression in young faces," in *Computer Vision and Pattern Recognition, 2006 IEEE Computer Society Conference on*, vol. 1. IEEE, 2006, pp. 387–394.

[8] A. Lanitis, C. J. Taylor, and T. F. Cootes, "Toward automatic simulation of aging effects on face images," *IEEE Transactions on Pattern Analysis and Machine Intelligence*, vol. 24, no. 4, pp. 442–455, 2002.

[9] D. M. Burt and D. I. Perrett, "Perception of age in adult caucasian male faces: Computer graphic manipulation of shape and colour information," *Proc. R. Soc. Lond. B*, vol. 259, no. 1355, pp. 137–143, 1995.

[10] I. Kemelmacher-Shlizerman, S. Suwajanakorn, and S. M. Seitz, "Illumination-aware age progression," in *Proceedings of the IEEE Conference on Computer Vision and Pattern Recognition*, 2014, pp. 3334–3341.

[11] X. Shu, J. Tang, H. Lai, L. Liu, and S. Yan, "Personalized age progression with aging dictionary," in *Proceedings of the IEEE International Conference on Computer Vision*, 2015, pp. 3970–3978.

[12] W. Wang, Z. Cui, Y. Yan, J. Feng, S. Yan, X. Shu, and N. Sebe, "Recurrent face aging," in *Proceedings of the IEEE Conference on Computer Vision and Pattern Recognition*, 2016, pp. 2378–2386.

[13] Z. Liu, Z. Zhang, and Y. Shan, "Image-based surface detail transfer," *IEEE Computer Graphics and Applications*, vol. 24, no. 3, pp. 30–35, 2004.

[14] I. Goodfellow, J. Pouget-Abadie, M. Mirza, B. Xu, D. Warde-Farley, S. Ozair, A. Courville, and Y. Bengio, "Generative adversarial nets," in *Advances in neural information processing systems*, 2014, pp. 2672–2680.

[15] A. Radford, L. Metz, and S. Chintala, "Unsupervised representation learning with deep convolutional generative adversarial networks," *arXiv preprint arXiv:1511.06434*, 2015.

[16] M. Mirza and S. Osindero, "Conditional generative adversarial nets," *arXiv preprint arXiv:1411.1784*, 2014.

[17] K. Gregor, I. Danihelka, A. Graves, D. J. Rezende, and D. Wierstra, "Draw: A recurrent neural network for image generation," *arXiv preprint arXiv:1502.04623*, 2015.

[18] X. Chen, Y. Duan, R. Houthooft, J. Schulman, I. Sutskever, and P. Abbeel, "Infogan: Interpretable representation learning by information maximizing generative adversarial nets," in *Advances in Neural Information Processing Systems*, 2016, pp. 2172–2180.

[19] E. L. Denton, S. Chintala, R. Fergus *et al.*, "Deep generative image models using a laplacian pyramid of adversarial networks," in *Advances in neural information processing systems*, 2015, pp. 1486–1494.

[20] D. J. Im, C. D. Kim, H. Jiang, and R. Memisevic, "Generating images with recurrent adversarial networks," *arXiv preprint arXiv:1602.05110*, 2016.

[21] A. Makhzani, J. Shlens, N. Jaitly, I. Goodfellow, and B. Frey, "Adversarial autoencoders," *arXiv preprint arXiv:1511.05644*, 2015.

[22] X. Yu and F. Porikli, "Ultra-resolving face images by discriminative generative networks," in *European Conference on Computer Vision*. Springer, 2016, pp. 318–333.

[23] J. Zhao, M. Mathieu, and Y. LeCun, "Energy-based generative adversarial network," *arXiv preprint arXiv:1609.03126*, 2016.