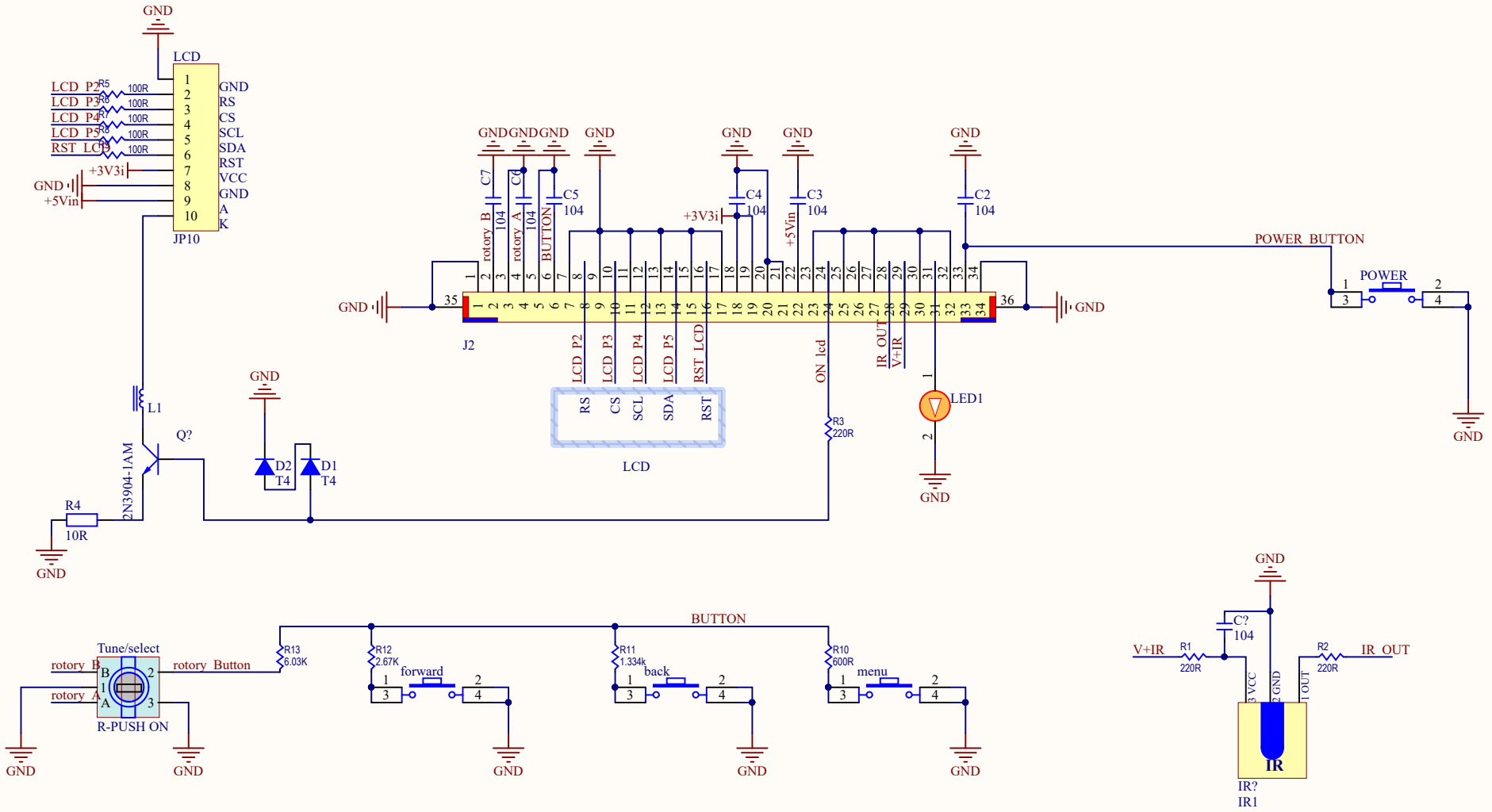

Title			Altium Limited L3, 12a Rodborough Rd Frenchs Forest NSW Australia 2086
Size: A4	Number:	Revision:	
Date: 28/07/2022	Time: 16:27:11	Sheet of	
File: C:\Users\THAI\Desktop\Radio FM\Mattruoc.SchDoc			

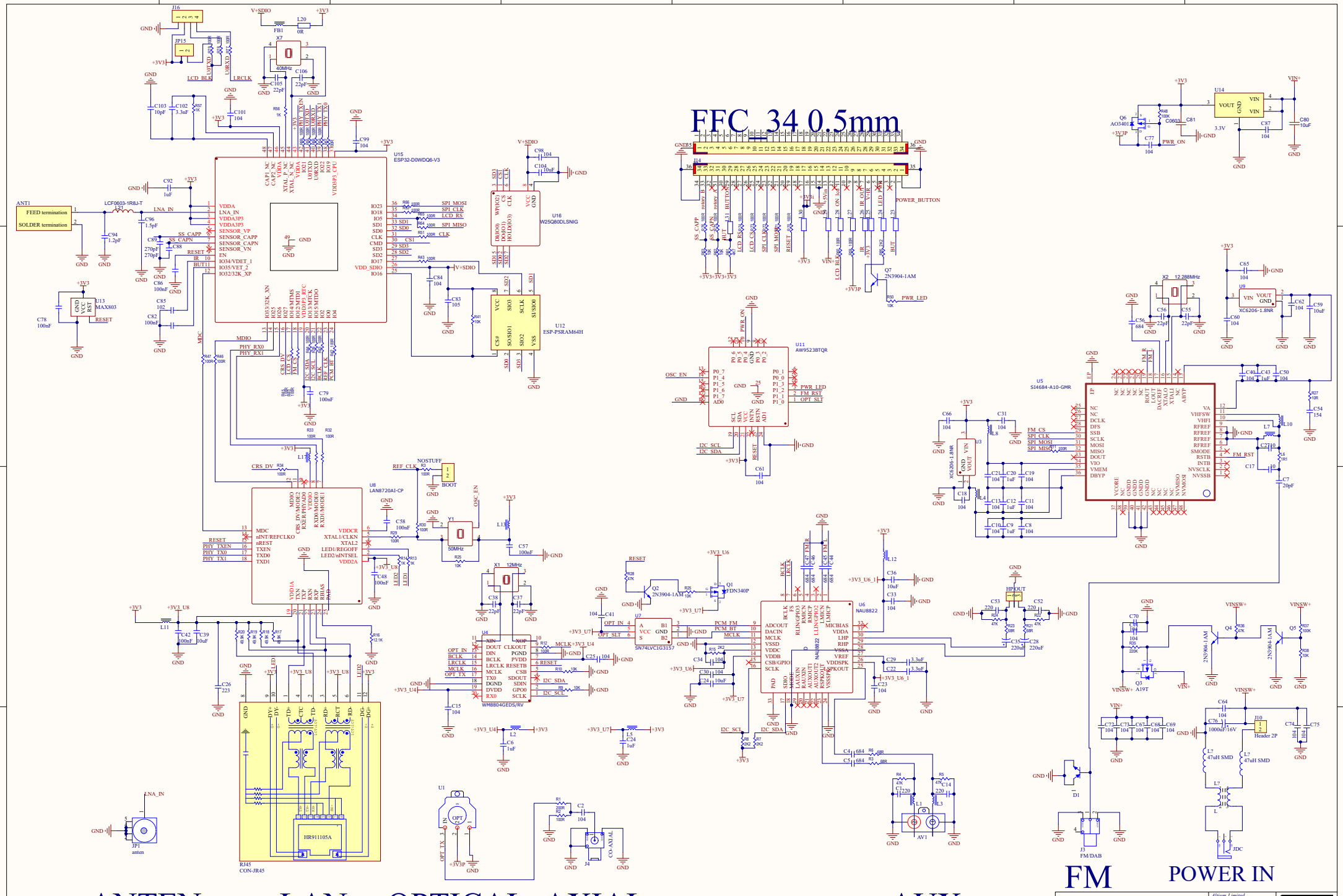

Title		
Size: A2	Number:	Revision:
Date: 28/07/2022	Time: 16:27:12	Sheet of
File: C:\Users\THAI\Desktop\Radio FM\SCH-radio.SchDoc		

Altium Limited
L3, 12a Rodborough Rd
Frenchs Forest
NSW
Australia 2086

Altium