TRION BGA81 DEVELOPMENT BOARD

T8F81Cx

CONTENTS

PAGE 01 - TABLE OF CONTENTS
PAGE 02 - BLOCK DIAGRAM
PAGE 03 - POWER, USB CONNECTOR
PAGE 04 - T8F81C DEVICE
PAGE 05 - T8F81C CAPS, MISCELLANEOUS
PAGE 06 - MCU
PAGE 07 - FLASH, CLOCK

REVISION HISTORY

1A	3/5/2018	Initial Creation
2A	4/26/2018	Removed JU7, updated fab revision, combined ASSY and SN labels into single PN, added second source to multiple parts. Changed J27 default 1-2. Changed .1uf and .01uF caps to 0201 size. Deleted C62, C63, and L9.
3A	5/8/18	Changed R127 to 0 ohm. Added R128 from AVSS to GND.
4A	1/10/19	Update value to DNI for R126, R125, R113, R114, R121 and R117. Update U1, U2 and U4 to fixed voltage regulator instead of adjustable voltage regulator.

Efinix
900 Lafayette St, Suite 406
Santa Clara, CA 95050

Copyright (c) 2018 All Rights Reserved

Title: TABLE OF CONTENTS
Size:
Document Number: 210-00012
Rev: 4
Date: Thursday, January 10, 2019
Sheet 1 of 7

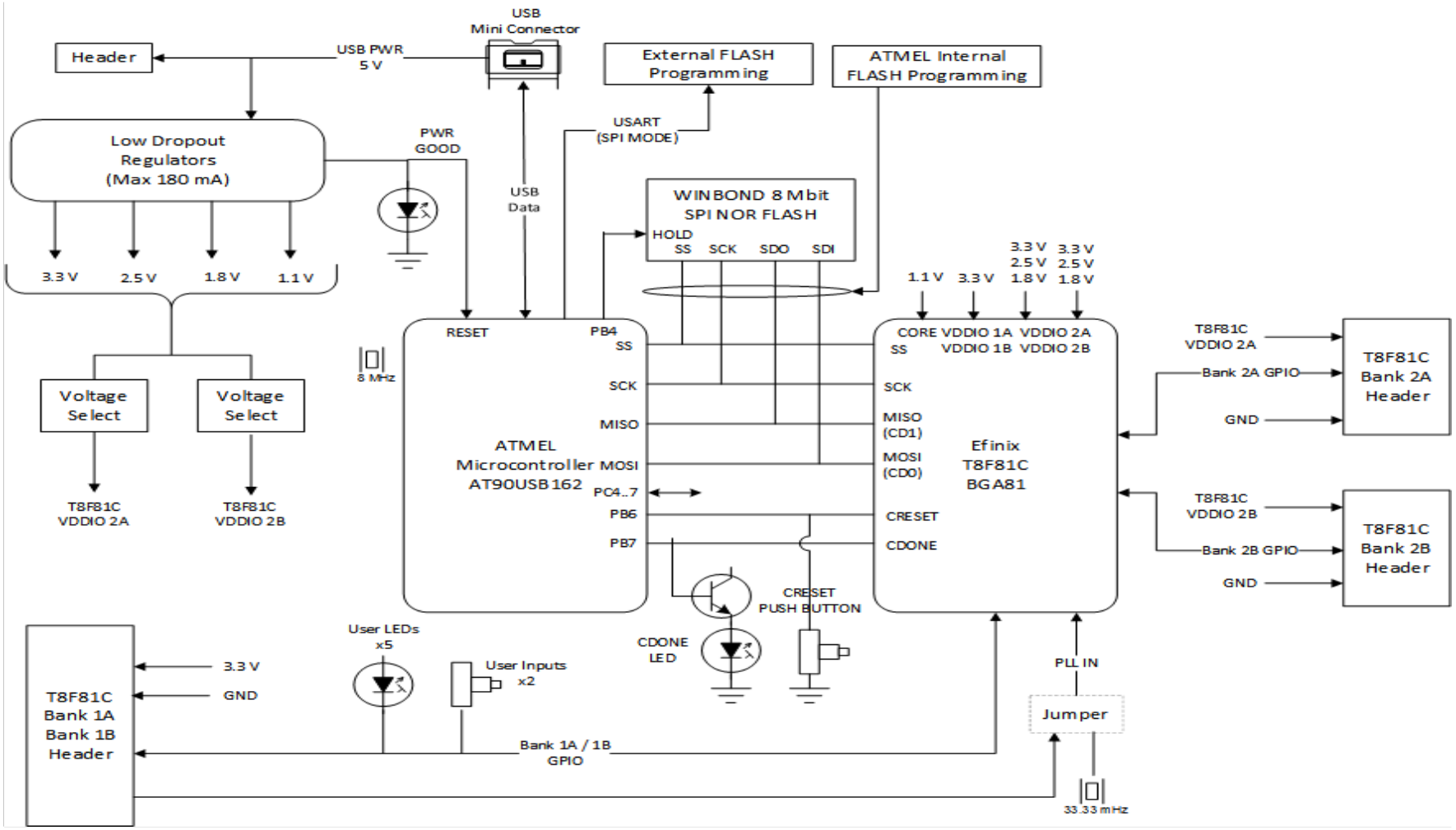

Efinix
900 Lafayette St, Suite 406
Santa Clara, CA 95050
Copyright (c) 2018 All Rights Reserved

EFINIX

Title	BLOCK DIAGRAM	
Size	Document Number 210-00012	Rev 4
Date: Thursday, May 24, 2018	Sheet 2 of 7	

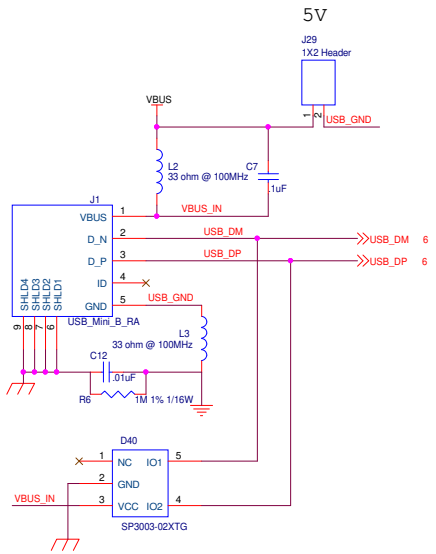

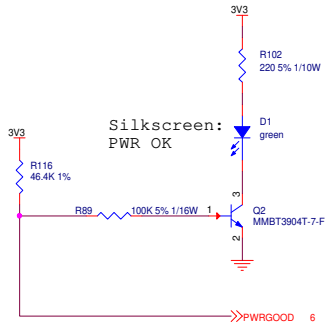

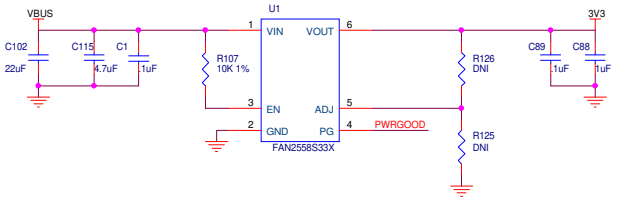

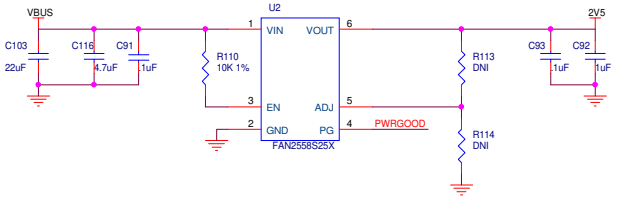

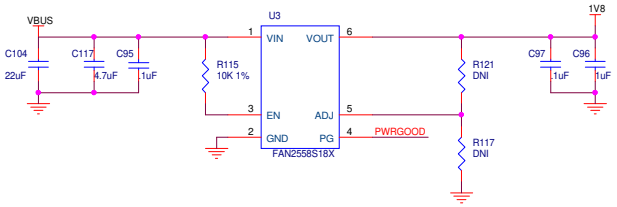

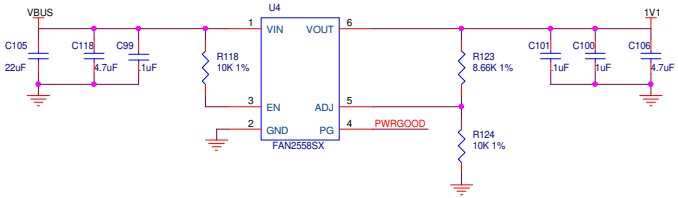

Efinix
900 Lafayette St, Suite 406
Santa Clara, CA 95050

Copyright (c) 2018 All Rights Reserved

Title: POWER, USB CONNECTOR

Size	Document Number	Rev
	210-00012	4

Date: Thursday, January 10, 2019 Sheet 3 of 7

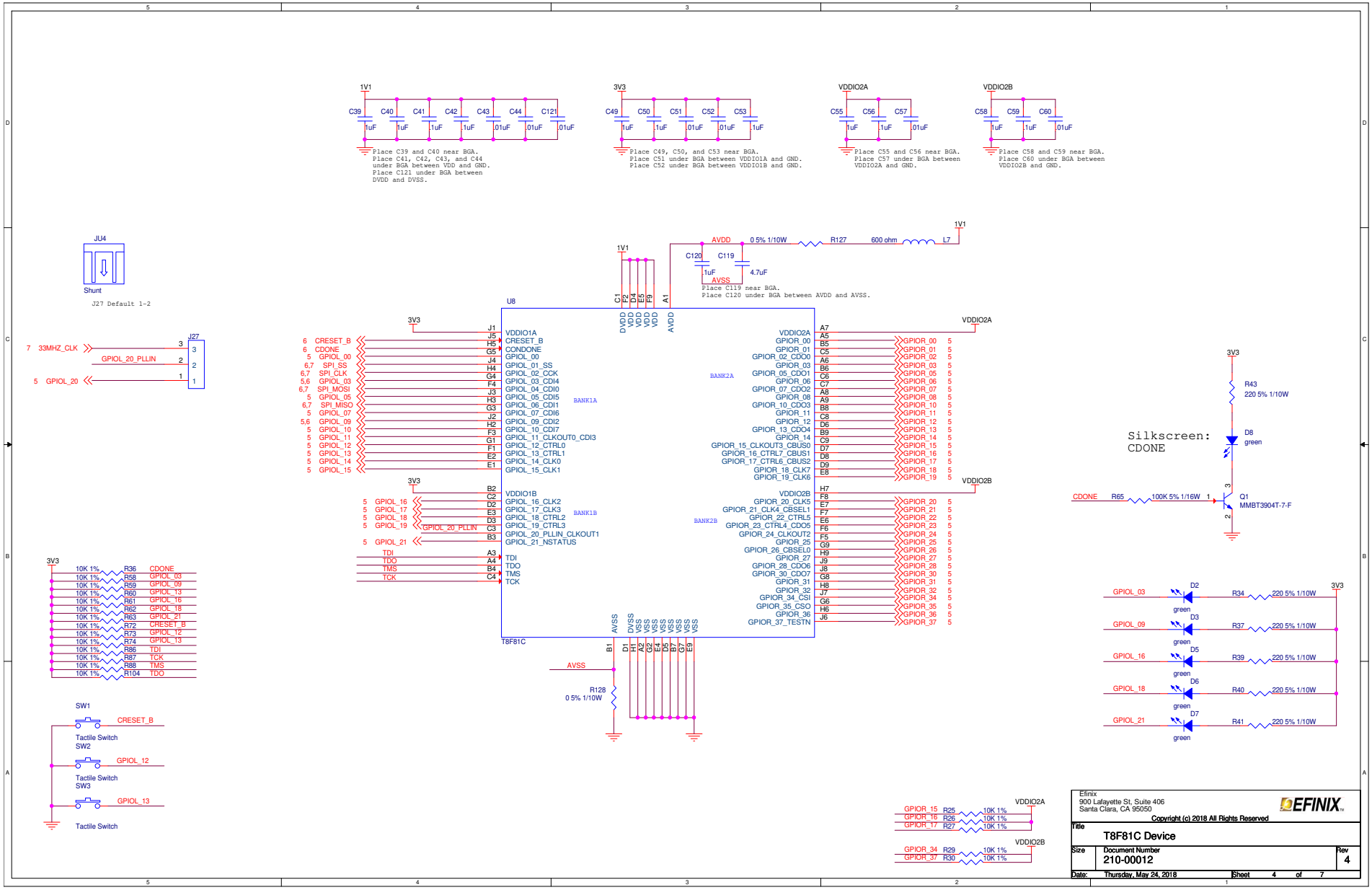

Efinix
900 Lafayette St, Suite 406
Santa Clara, CA 95050

Copyright (c) 2018 All Rights Reserved

EFINIX

Title: T8F81C Device

Size | Document Number: 210-00012 | Rev: 4

Date: Thursday, May 24, 2018 | Sheet 4 of 7

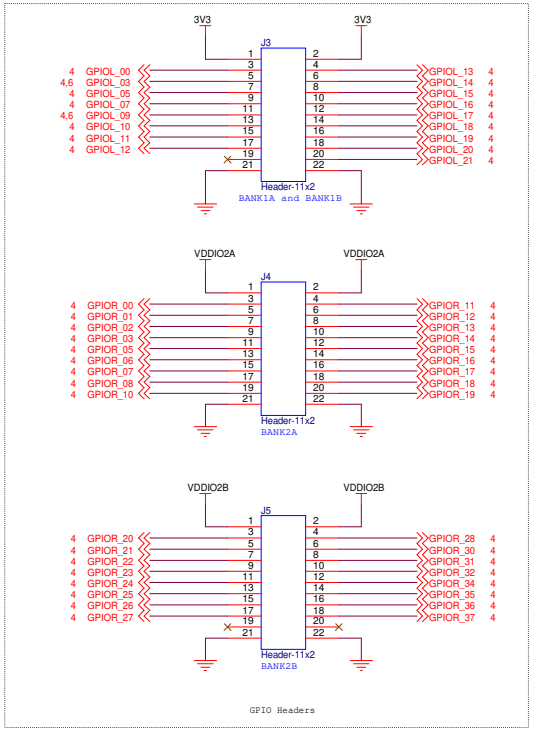

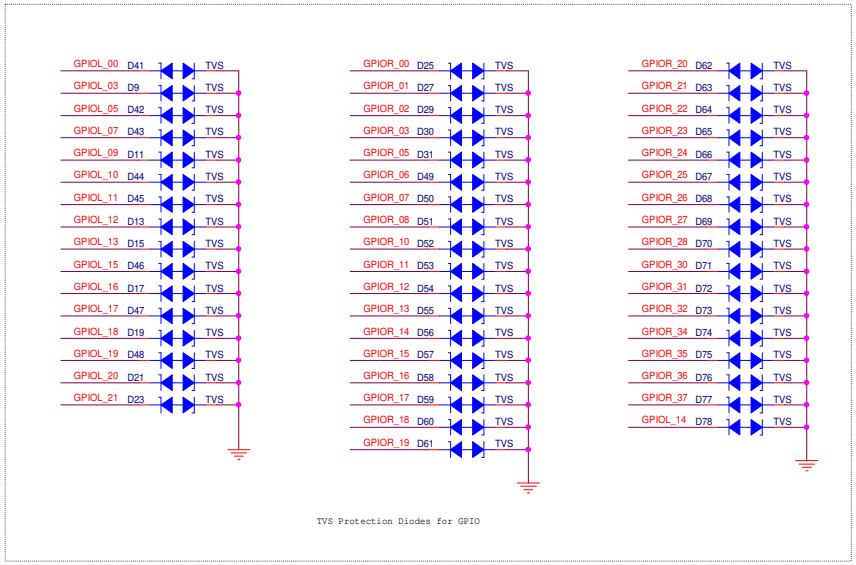

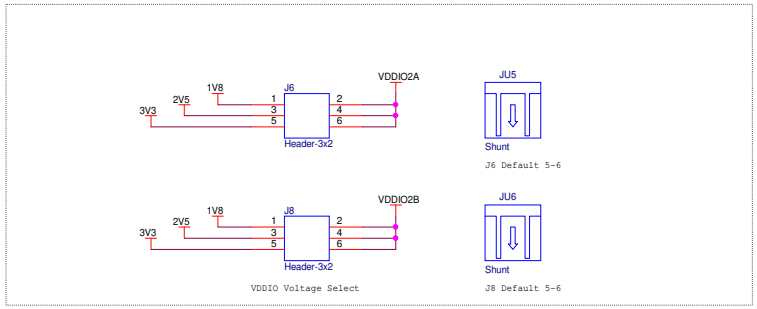

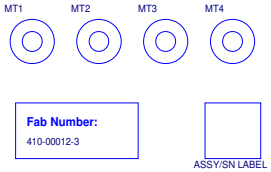

Efinix
900 Lafayette St, Suite 406
Santa Clara, CA 95050

Copyright (c) 2018 All Rights Reserved

Title: T8F81C Device CAPS, MISC.

Size	Document Number	Rev
	210-00012	4

Date: Thursday, May 24, 2018 Sheet 5 of 7

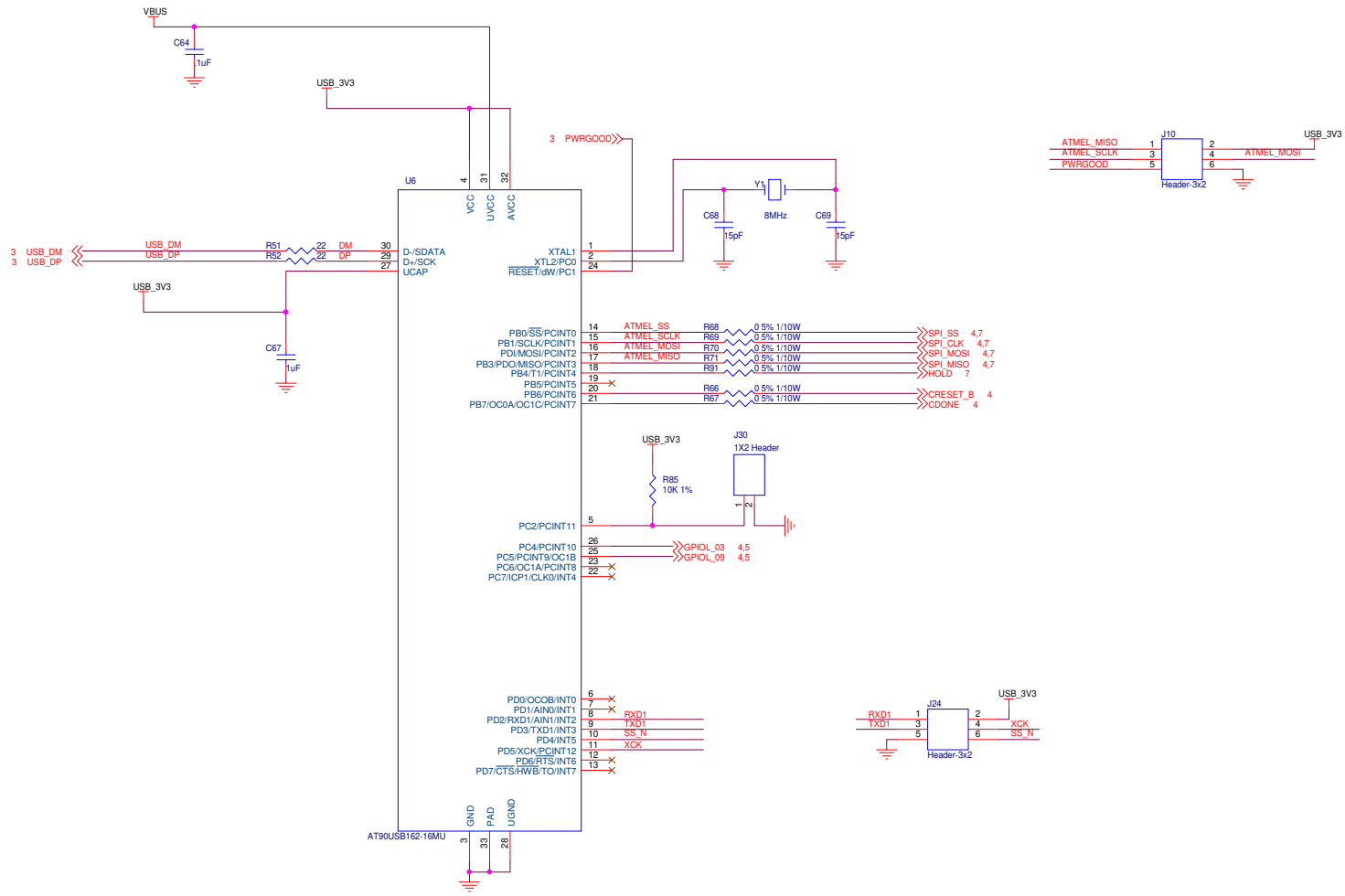

Efinix
900 Lafayette St, Suite 406
Santa Clara, CA 95050

Copyright (c) 2018 All Rights Reserved

Title	MCU
Size	
Document Number	210-00012
Rev	4
Date:	Thursday, May 24, 2018
Sheet	6 of 7

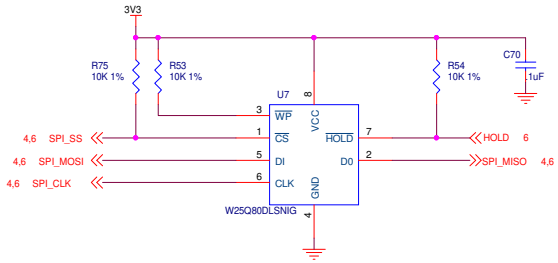

Efinix
900 Lafayette St, Suite 406
Santa Clara, CA 95050

EFINIX™

Copyright (c) 2018 All Rights Reserved

Title
FLASH, CLOCK

Size	Document Number	Rev
	210-00012	4

Date: Thursday, May 24, 2018 Sheet 7 of 7

Bill of Materials

Item	Quantity	Part Types	Description	Reference	PCB Footprint	Manufacturer	Manufacturer Part Number
1	19	Capacitor	CER 0.1UF 6.3V X5R 0201	C1,C7,C41,C42,C50,C53,C56,C59,C61,C64,C70,C89, C91,C93,C95,C97,C99,C101,C120	SMD0201	Samsung	CL03A104KQ3NNNH
2	8	Capacitor	CER 10000PF 16V X5R 0201	C12,C43,C44,C51,C52,C57,C60,C121	SMD0201	Samsung	CL03A103KO3NNNC
3	10	Capacitor	CER 1UF 6.3V X5R 0402	C39,C40,C49,C55,C58,C67,C88,C92,C96,C100	SMD0402	TDK	C1005X5R1V105M050BC
4	6	Capacitor	CER 4.7UF 6.3V X5R 0402	C106,C115,C116,C117,C118,C119	SMD0402	TDK	C1005X5R0J475M050BC
5	2	Capacitor	CER 15PF 16V C0G/NP0 0402	C68,C69	SMD0402	Yageo	CC0402JRNPO9BN150
6	4	Capacitor	22UF, 6.3V, X5R, ROHS, 0603	C102,C103,C104,C105	SMD0603	Samsung	CL10A226MQ8NRNC
7	7	Diode	LED GREEN CLEAR 0603 SMD	D1,D2,D3,D5,D6,D7,D8	LED0603	Lite-On Inc.	LTST-C191KGKT
8	51	Diode	TVS DIODE 3.3V 13V 0402C/SOD923F	D9,D11,D13,D15,D17,D19,D21,D23,D25,D27,D29,D30, D31,D41,D42,D43,D44,D45,D46,D47,D48,D49,D50,D51, D52,D53,D54,D55,D56,D57,D58,D59,D60,D61,D62,D63, D64,D65,D66,D67,D68,D69,D70,D71,D72,D73,D74,D75, D76,D77,D78	0402C	ComchipTechnology	CPDQC3V3C-HF
9	1	Diode	TVS DIODE 6VWM 15VC SOT553	D40	SOT-553	Little Fuse	SP3003-02XTG
10	3	Shunt	CONN JUMPER SHORTING GOLD FLASH	JU4,JU5,JU6		Antenk	MNJ03-CAAG0D
11	1	Connector	CONN RCPT MINIUSB B 5POS SMD R/A	J1	USB_RA	Antenk	NUFM07-SPBG0A
12	3	Header	2X11 Header, Vertical, 2.54	J3,J4,J5	2X11_HEADER	Antenk	PHES04-22G0DABH2
13	4	Header	2X3 HEADER	J6,J8,J10,J24	HEADER_2X3	Antenk	PHES04-06G0DABH2
14	1	Header	1X3 HEADER	J27	1X3_HEADER	Antenk	PHES01-03G0SABH2
15	2	Header	1X2 HEADER	J29,J30	1X2_HEADER	Antenk	PHES01-02G0SABH2
16	2	Inductor	FERRITE BEAD 33 OHM 0402	L2,L3	SMD0402	Murata	BLM15PX330SN1D
17	1	Inductor	FERRITE BEAD 600 OHM 0402	L7	SMD0402	Murata	BLM15AG601SN1D
18	2	Transistor	NPN 40V 0.2A SOT523	Q1,Q2	SOT-523	Kingwell Technology	MMBT3904T
19	1	Resistor	1M OHM 1% 1/16W 0402	R6	SMD0402	ASJ	CR10-1004-FK
20	31	Resistor	10K OHM 1% 1/16W 0402	R25,R26,R27,R29,R30,R36,R53,R54,R58,R59,R60,R61, R62,R63,R72,R73,R74,R75,R85,R86,R87,R88,R104, R107,R110,R115,R118,R124	SMD0402	ASJ	CR10-1002-FK
21	7	Resistor	220 OHM 1/10W 5% 0603	R34,R37,R39,R40,R41,R43,R102	SMD0603	ASJ	CR16-221-JL
22	1	Resistor	33 ohms, 5%,1/16W	R42	SMD0402	ASJ	CR10-33R-JK
23	2	Resistor	22 OHM 1% 1/16W 0402	R51,R52	SMD0402	ASJ	CR10-22R-FK
24	2	Resistor	100K OHM 5% 1/16W 0402	R65,R89	SMD0402	ASJ	CR10-1003-JK
25	9	Resistor	0.0 OHM 1/10W 0402	R66,R67,R68,R69,R70,R71,R91, R127,R128	SMD0402	ASJ	CR10-0000-FK
26	1	Resistor	46.4K OHM 1% 1/16W 0402	R116	SMD0402	ASJ	CR10-4642-FK
27	1	Resistor	8.66K OHM 1% 1/16W 0402	R123	SMD0402	ASJ	CR10-8662-FK
28	3	Tactile Switch	SWITCH TACTILE SPST-NO 0.05A 12V	SW1,SW2,SW3	2PSMD_JICTEN	Jicten	LS-1185AU1-A
29	1	IC	IC REG LINEAR 3.3V 180MA	U1	SOT23-5	On Semi	FAN2558S33X
30	1	IC	IC REG LINEAR 2.5V 180MA	U2	SOT23-5	On Semi	FAN2558S25X
31	1	IC	IC REG LINEAR 1.8V 180MA	U3	SOT23-5	On Semi	FAN2558S18X
32	1	IC	IC REG LIN POS ADJ 180MA	U4	SOT23-6	On Semi	FAN2558SX
33	1	IC	8BIT MCU	U6	32VQFN	Microchip	AT90USB162-16MU
34	1	IC	SPIFLASH, 8M-BIT, 4KB	U7	SO8	Winbond	W25Q80DVSNIG
35	1	IC	Trion BGA81 8K LE Device	U8	81BGA	Efinix	T8F81C
36	1	Oscillator	33.333MHz XO (Standard) CMOS Oscillator 3.3V Enable/Disable 4-SMD	X1	4-SMD	Abracon	ASE-33.333MHZ-LC-T
37	1	Crystal	8MHz ±20ppm Crystal 18pF 140 Ohms 2-SMD	Y1	2-SMD	NKG	S5GA8.0000F18M23

Copyright © 2019. All rights reserved. Efinix, the Efinix logo, Quantum, Trion, and Efinity are trademarks of Efinix, Inc. All other trademarks and service marks are the property of their respective owners. All specifications subject to change without notice.

Disclaimers

EFINIX DOES NOT PROVIDES ANY WARRANTY OF ACCURACY, COMPLETENESS, MERCHANTABILITY OR NONINFRINGEMENT OF THIRD-PARTY RIGHTS ON THIS DOCUMENT. THE INFORMATION IN THIS DOCUMENT IS “AS IS”. IN NO EVENT WILL EFINIX BE LIABLE FOR ANY EXEMPLARY, SPECIAL, CONSEQUENTIAL, INDIRECT, OR INCIDENTAL DAMAGES, INCLUDING ANY LOSS OF DATA, LOST OF PROFITS, LOSS OF INFORMATION, LOSS OF LIFE OR BUSINESS INTERRUPTION, ARISING FROM YOUR USE OF THIS DOCUMENT.

EFINIX shall make changes to this document at any time without notification. EFINIX assumes no obligation to correct any errors contained in this document or to advise any user of this document of any correction if such be made. EFINIX advise its customers obtain the latest FPGA schematic before ordering so that no conflict of information correctness afterward.

Copyright © 2019. All rights reserved. Efinix, the Efinix logo, Quantum, Trion, and Efinity are trademarks of Efinix, Inc. All other trademarks and service marks are the property of their respective owners. All specifications subject to change without notice.