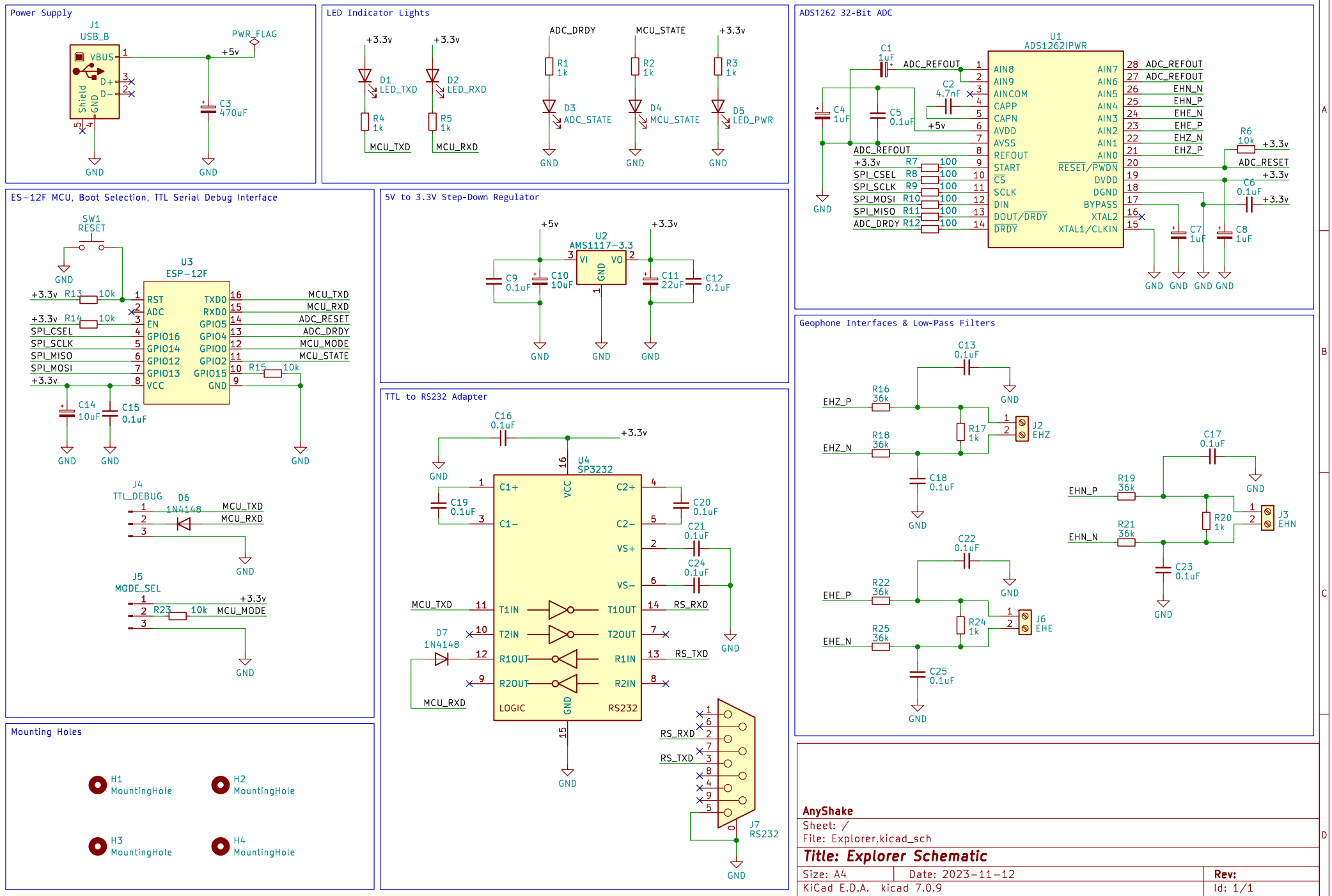
Power Supply
J1
USB_B
VBUS
D+
D−
Shield
GND
PWR_FLAG
+5v
C3
470uF
GND
LED Indicator Lights
+3.3v
D1
LED_TXD
R4
1k
MCU_TXD
D2
LED_RXD
R5
1k
MCU_RXD
ADC_DRDY
R1
1k
D3
ADC_STATE
MCU_STATE
R2
1k
D4
MCU_STATE
R3
1k
D5
LED_PWR
ADS1262 32-Bit ADC
U1
ADS1262IPWR
C1
1uF
ADC_REFOUT
C2
4.7nF
C4
1uF
C5
0.1uF
+5v
AIN8
AIN9
AINCOM
CAPP
CAPN
AVDD
AVSS
REFOUT
START
CS
SCLK
DIN
DOUT/DRDY
DRDY
AIN7
AIN6
AIN5
AIN4
AIN3
AIN2
AIN1
AIN0
RESET/PWDN
DVDD
DGND
BYPASS
XTAL2
XTAL1/CLKIN
ADC_REFOUT
EHN_N
EHN_P
EHE_N
EHE_P
EHZ_N
EHZ_P
R6
10k
ADC_RESET
C6
0.1uF
C7
1uF
C8
1uF
SPI_CSEL
SPI_SCLK
SPI_MOSI
SPI_MISO
ADC_DRDY
R7
R8
R9
R10
R11
R12
100
ES−12F MCU, Boot Selection, TTL Serial Debug Interface
SW1
RESET
U3
ESP−12F
RST
ADC
EN
GPIO16
GPIO14
GPIO12
GPIO13
VCC
TXD0
RXD0
GPIO5
GPIO4
GPIO0
GPIO2
GPIO15
GND
MCU_TXD
MCU_RXD
ADC_RESET
ADC_DRDY
MCU_MODE
MCU_STATE
R13
R14
R15
10k
C14
10uF
C15
0.1uF
J4
TTL_DEBUG
D6
1N4148
J5
MODE_SEL
R23
5V to 3.3V Step-Down Regulator
U2
AMS1117−3.3
VI
VO
C9
0.1uF
C10
10uF
C11
22uF
C12
0.1uF
TTL to RS232 Adapter
C16
0.1uF
U4
SP3232
C1+
C1−
VCC
C2+
C2−
VS+
VS−
T1IN
T2IN
R1OUT
R2OUT
LOGIC
T1OUT
T2OUT
R1IN
R2IN
RS232
C19
0.1uF
C20
0.1uF
C21
0.1uF
C24
0.1uF
RS_RXD
RS_TXD
D7
1N4148
J7
RS232
Geophone Interfaces & Low-Pass Filters
C13
0.1uF
EHZ_P
EHZ_N
R16
36k
R17
1k
R18
36k
C18
0.1uF
J2
EHZ
C17
0.1uF
EHN_P
EHN_N
R19
36k
R20
1k
R21
36k
C23
0.1uF
J3
EHN
C22
0.1uF
EHE_P
EHE_N
R22
36k
R24
1k
R25
36k
C25
0.1uF
J6
EHE
Mounting Holes
H1
MountingHole
H2
MountingHole
H3
MountingHole
H4
MountingHole
AnyShake
Sheet: /
File: Explorer.kicad_sch
Title: Explorer Schematic
Size: A4
Date: 2023−11−12
Rev:
KiCad E.D.A. kicad 7.0.9
Id: 1/1