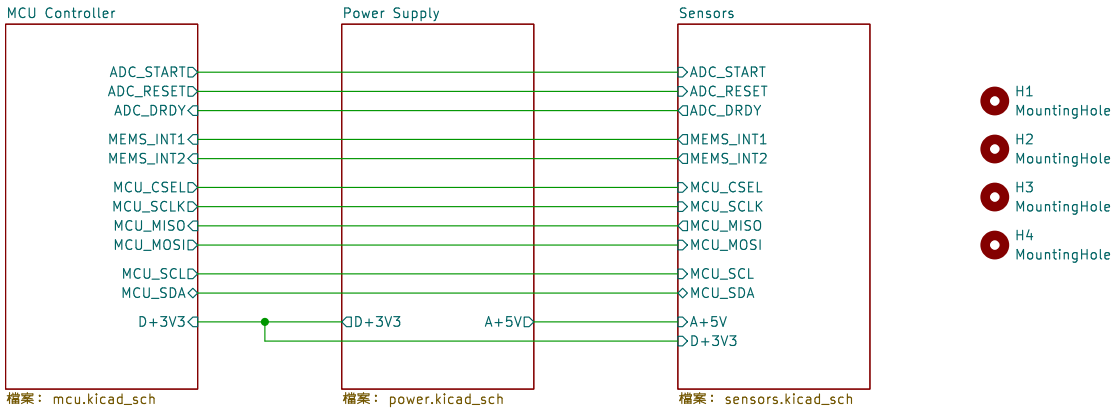

AnyShake Project

Sheet: /
File: Explorer.kicad_sch

Title: AnyShake Explorer

Size: A4	Date: 2024-05-06	**Rev:**
KiCad E.D.A. 8.0.3		Id: 1/4

12V DC Power In

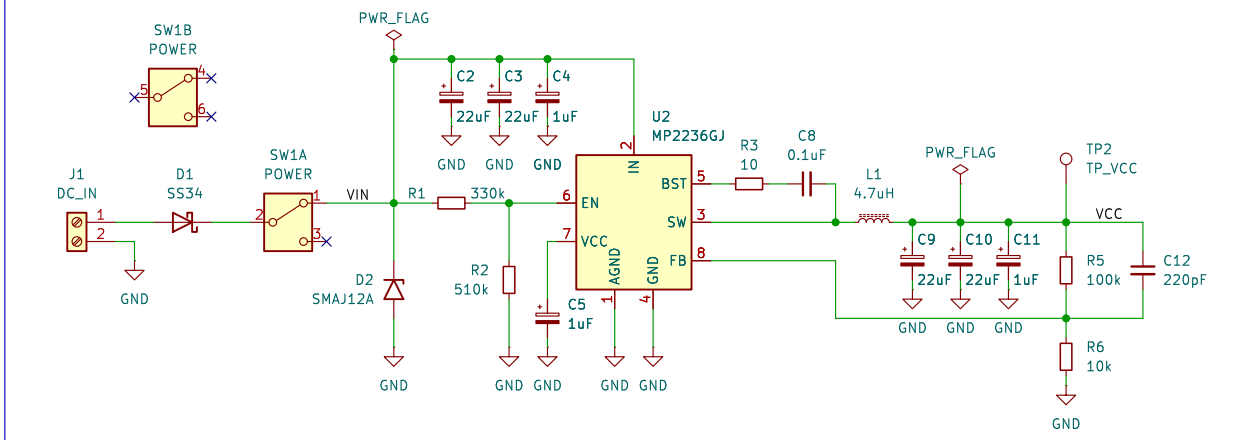

Digital Power Supply +3.3V

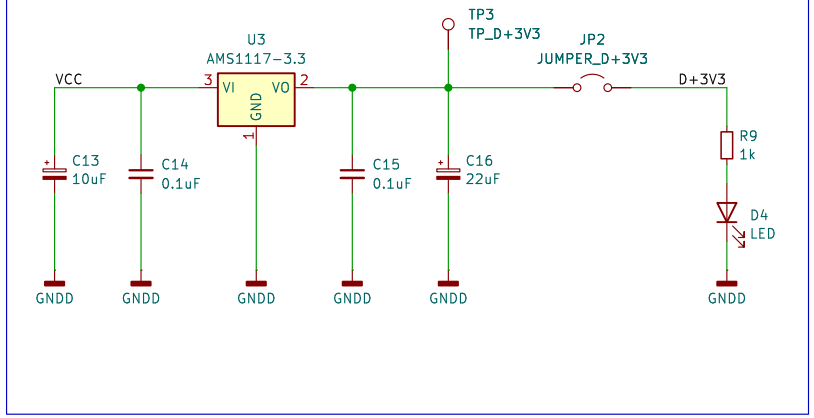

Exports and Flags

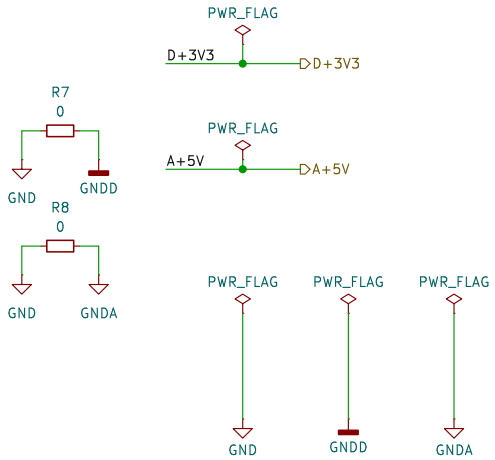

Analog Power Supply +5V

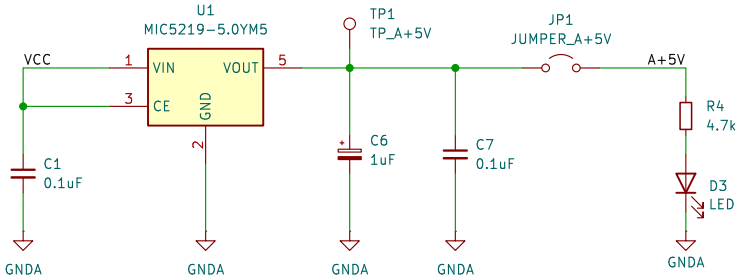

AnyShake Project

Sheet: /Power Supply/
File: power.kicad_sch

Title: AnyShake Explorer

Size: A4	Date: 2024-06-25	**Rev:**
KiCad E.D.A. 8.0.3		Id: 2/4

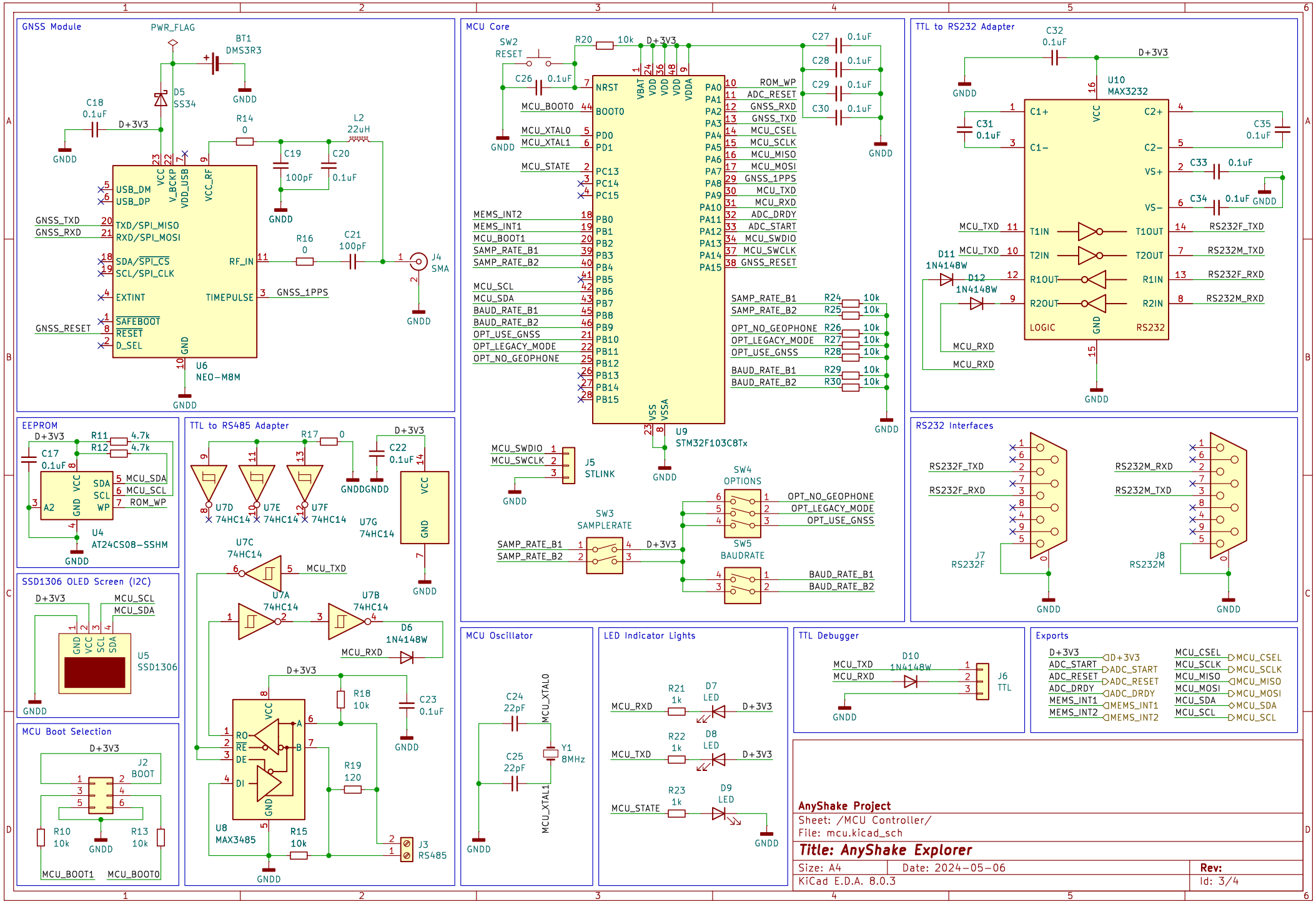
GNSS Module
PWR_FLAG
BT1
DMS3R3
D5
SS34
C18
0.1uF
D+3V3
GNDD
R14
0
L2
22uH
C19
100pF
C20
0.1uF
VCC
V_BCKP
VDD_USB
VCC_RF
USB_DM
USB_DP
GNSS_TXD
GNSS_RXD
TXD/SPI_MISO
RXD/SPI_MOSI
SDA/SPI_CS
SCL/SPI_CLK
EXTINT
GNSS_RESET
SAFEBOOT
RESET
D_SEL
RF_IN
TIMEPULSE
GND
R16
0
C21
100pF
J4
SMA
GNSS_1PPS
U6
NEO-M8M
MCU Core
SW2
RESET
R20
10k
C26
0.1uF
NRST
BOOT0
MCU_BOOT0
MCU_XTAL0
MCU_XTAL1
MCU_STATE
PD0
PD1
PC13
PC14
PC15
MEMS_INT2
MEMS_INT1
MCU_BOOT1
SAMP_RATE_B1
SAMP_RATE_B2
MCU_SCL
MCU_SDA
BAUD_RATE_B1
BAUD_RATE_B2
OPT_USE_GNSS
OPT_LEGACY_MODE
OPT_NO_GEOPHONE
PB0
PB1
PB2
PB3
PB4
PB5
PB6
PB7
PB8
PB9
PB10
PB11
PB12
PB13
PB14
PB15
VBAT
VDD
VDDA
VSS
VSSA
PA0
PA1
PA2
PA3
PA4
PA5
PA6
PA7
PA8
PA9
PA10
PA11
PA12
PA13
PA14
PA15
ROM_WP
ADC_RESET
GNSS_RXD
GNSS_TXD
MCU_CSEL
MCU_SCLK
MCU_MISO
MCU_MOSI
GNSS_1PPS
MCU_TXD
MCU_RXD
ADC_DRDY
ADC_START
MCU_SWDIO
MCU_SWCLK
GNSS_RESET
C27
C28
C29
C30
0.1uF
R24
R25
R26
R27
R28
R29
R30
10k
U9
STM32F103C8Tx
J5
STLINK
SW4
OPTIONS
OPT_NO_GEOPHONE
OPT_LEGACY_MODE
OPT_USE_GNSS
SW3
SAMPLERATE
SW5
BAUDRATE
BAUD_RATE_B1
BAUD_RATE_B2
TTL to RS232 Adapter
C32
0.1uF
U10
MAX3232
C1+
C1-
C2+
C2-
VS+
VS-
C31
C33
C34
C35
T1IN
T2IN
R1OUT
R2OUT
T1OUT
T2OUT
R1IN
R2IN
LOGIC
RS232
RS232F_TXD
RS232F_RXD
RS232M_TXD
RS232M_RXD
D11
D12
1N4148W
EEPROM
C17
0.1uF
R11
R12
4.7k
SDA
SCL
WP
A2
U4
AT24CS08-SSHM
TTL to RS485 Adapter
R17
0
C22
0.1uF
U7D
U7E
U7F
U7G
74HC14
U7C
U7A
U7B
MCU_TXD
D6
1N4148W
R18
10k
C23
0.1uF
RO
RE
DE
DI
A
B
U8
MAX3485
R19
120
R15
10k
J3
RS485
RS232 Interfaces
J7
RS232F
J8
RS232M
SSD1306 OLED Screen (I2C)
U5
SSD1306
MCU Boot Selection
J2
BOOT
R10
10k
R13
10k
MCU_BOOT1
MCU_BOOT0
MCU Oscillator
C24
22pF
C25
22pF
Y1
8MHz
LED Indicator Lights
R21
1k
R22
1k
R23
1k
D7
D8
D9
LED
TTL Debugger
D10
J6
TTL
Exports
D+3V3
ADC_START
ADC_RESET
ADC_DRDY
MEMS_INT1
MEMS_INT2
MCU_CSEL
MCU_SCLK
MCU_MISO
MCU_MOSI
MCU_SDA
MCU_SCL
AnyShake Project
Sheet: /MCU Controller/
File: mcu.kicad_sch
Title: AnyShake Explorer
Size: A4
Date: 2024-05-06
Rev:
KiCad E.D.A. 8.0.3
Id: 3/4

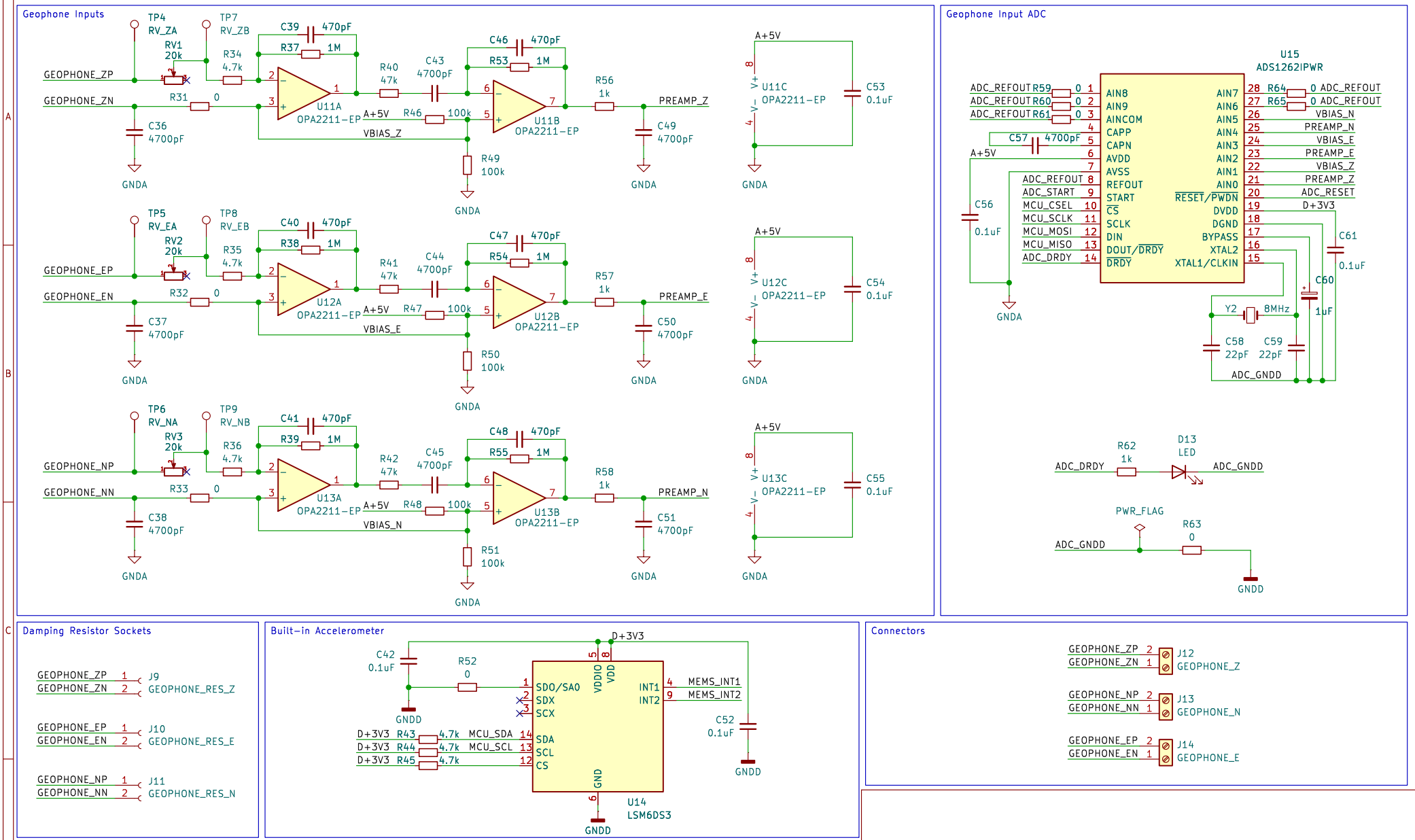
Geophone Inputs
TP4 RV_ZA
TP7 RV_ZB
RV1 20k
GEOPHONE_ZP
GEOPHONE_ZN
R31 0
R34 4.7k
C36 4700pF
C39 470pF
R37 1M
U11A OPA2211-EP
R40 47k
C43 4700pF
R46 100k
VBIAS_Z
R49 100k
C46 470pF
R53 1M
U11B OPA2211-EP
R56 1k
PREAMP_Z
C49 4700pF
U11C OPA2211-EP
C53 0.1uF
TP5 RV_EA
TP8 RV_EB
RV2 20k
GEOPHONE_EP
GEOPHONE_EN
R32 0
R35 4.7k
C37 4700pF
C40 470pF
R38 1M
U12A OPA2211-EP
R41 47k
C44 4700pF
R47 100k
VBIAS_E
R50 100k
C47 470pF
R54 1M
U12B OPA2211-EP
R57 1k
PREAMP_E
C50 4700pF
U12C OPA2211-EP
C54 0.1uF
TP6 RV_NA
TP9 RV_NB
RV3 20k
GEOPHONE_NP
GEOPHONE_NN
R33 0
R36 4.7k
C38 4700pF
C41 470pF
R39 1M
U13A OPA2211-EP
R42 47k
C45 4700pF
R48 100k
VBIAS_N
R51 100k
C48 470pF
R55 1M
U13B OPA2211-EP
R58 1k
PREAMP_N
C51 4700pF
U13C OPA2211-EP
C55 0.1uF
A+5V
GNDA
Geophone Input ADC
U15 ADS1262IPWR
ADC_REFOUT R59 0
ADC_REFOUT R60 0
ADC_REFOUT R61 0
C57 4700pF
C56 0.1uF
ADC_REFOUT
ADC_START
MCU_CSEL
MCU_SCLK
MCU_MOSI
MCU_MISO
ADC_DRDY
AIN8
AIN9
AINCOM
CAPP
CAPN
AVDD
AVSS
REFOUT
START
CS
SCLK
DIN
DOUT/DRDY
DRDY
AIN7
AIN6
AIN5
AIN4
AIN3
AIN2
AIN1
AIN0
RESET/PWDN
DVDD
DGND
BYPASS
XTAL2
XTAL1/CLKIN
R64 0 ADC_REFOUT
R65 0 ADC_REFOUT
VBIAS_N
PREAMP_N
VBIAS_E
PREAMP_E
VBIAS_Z
PREAMP_Z
ADC_RESET
D+3V3
C61 0.1uF
C60 1uF
Y2 8MHz
C58 22pF
C59 22pF
ADC_GNDD
R62 1k
D13 LED
PWR_FLAG
R63 0
GNDD
Damping Resistor Sockets
GEOPHONE_ZP 1
GEOPHONE_ZN 2
J9 GEOPHONE_RES_Z
GEOPHONE_EP 1
GEOPHONE_EN 2
J10 GEOPHONE_RES_E
GEOPHONE_NP 1
GEOPHONE_NN 2
J11 GEOPHONE_RES_N
Built-in Accelerometer
C42 0.1uF
R52 0
D+3V3
SDO/SA0
SDX
SCX
SDA
SCL
CS
VDDIO
VDD
GND
INT1
INT2
MEMS_INT1
MEMS_INT2
C52 0.1uF
D+3V3 R43 4.7k MCU_SDA
D+3V3 R44 4.7k MCU_SCL
D+3V3 R45 4.7k
U14 LSM6DS3
Connectors
GEOPHONE_ZP 2
GEOPHONE_ZN 1
J12 GEOPHONE_Z
GEOPHONE_NP 2
GEOPHONE_NN 1
J13 GEOPHONE_N
GEOPHONE_EP 2
GEOPHONE_EN 1
J14 GEOPHONE_E
Exports
D+3V3
A+5V
ADC_START
ADC_RESET
ADC_DRDY
MEMS_INT1
MEMS_INT2
MCU_CSEL
MCU_SCLK
MCU_MISO
MCU_MOSI
MCU_SDA
MCU_SCL
AnyShake Project
Sheet: /Sensors/
File: sensors.kicad_sch
Title: AnyShake Explorer
Size: A4
Date: 2024-05-06
Rev:
KiCad E.D.A. 8.0.3
Id: 4/4