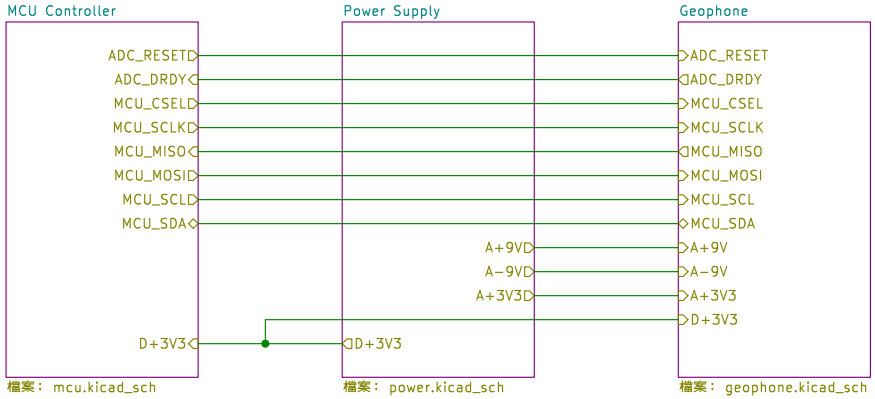

AnyShake Project

Sheet: /
File: Explorer.kicad_sch

Title: AnyShake Explorer

Size: A4	Date: 2024−05−06	**Rev:**
KiCad E.D.A. kicad 7.0.10		Id: 1/4

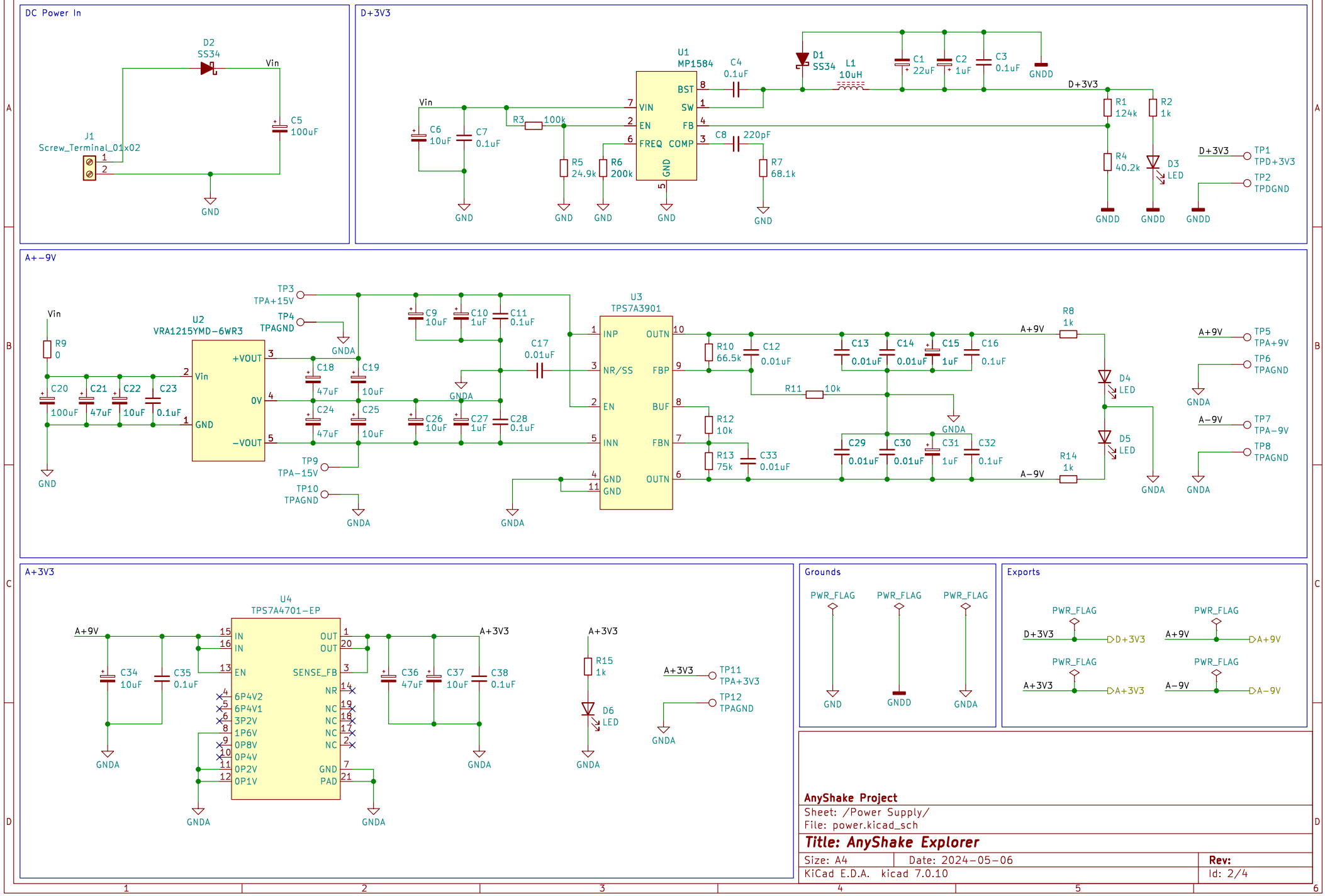
DC Power In
D2
SS34
Vin
C5
100uF
J1
Screw_Terminal_01x02
GND
D+3V3
U1
MP1584
VIN
EN
FREQ
BST
SW
FB
COMP
GND
C4
0.1uF
D1
SS34
L1
10uH
C1
22uF
C2
1uF
C3
0.1uF
GNDD
R1
124k
R2
1k
R4
40.2k
D3
LED
TP1
TPD+3V3
TP2
TPDGND
C6
10uF
C7
0.1uF
R3
100k
R5
24.9k
R6
200k
C8
220pF
R7
68.1k
A+-9V
U2
VRA1215YMD-6WR3
+VOUT
0V
-VOUT
TP3
TPA+15V
TP4
TPAGND
TP9
TPA-15V
TP10
TPAGND
GNDA
R9
0
C20
100uF
C21
47uF
C22
10uF
C23
0.1uF
C18
47uF
C19
10uF
C24
47uF
C25
10uF
C9
10uF
C10
1uF
C11
0.1uF
C26
10uF
C27
1uF
C28
0.1uF
C17
0.01uF
U3
TPS7A3901
INP
NR/SS
EN
INN
GND
OUTN
FBP
BUF
FBN
R10
66.5k
C12
0.01uF
R11
10k
R12
10k
R13
75k
C33
0.01uF
C13
0.01uF
C14
0.01uF
C15
1uF
C16
0.1uF
C29
0.01uF
C30
0.01uF
C31
1uF
C32
0.1uF
R8
1k
R14
1k
A+9V
A-9V
D4
LED
D5
LED
TP5
TPA+9V
TP6
TPAGND
TP7
TPA-9V
TP8
TPAGND
A+3V3
U4
TPS7A4701-EP
IN
OUT
EN
SENSE_FB
NR
NC
6P4V2
6P4V1
3P2V
1P6V
0P8V
0P4V
0P2V
0P1V
PAD
C34
10uF
C35
0.1uF
C36
47uF
C37
10uF
C38
0.1uF
R15
1k
D6
LED
TP11
TPA+3V3
TP12
TPAGND
Grounds
PWR_FLAG
Exports
D+3V3
A+9V
A+3V3
A-9V
AnyShake Project
Sheet: /Power Supply/
File: power.kicad_sch
Title: AnyShake Explorer
Size: A4
Date: 2024-05-06
Rev:
KiCad E.D.A. kicad 7.0.10
Id: 2/4

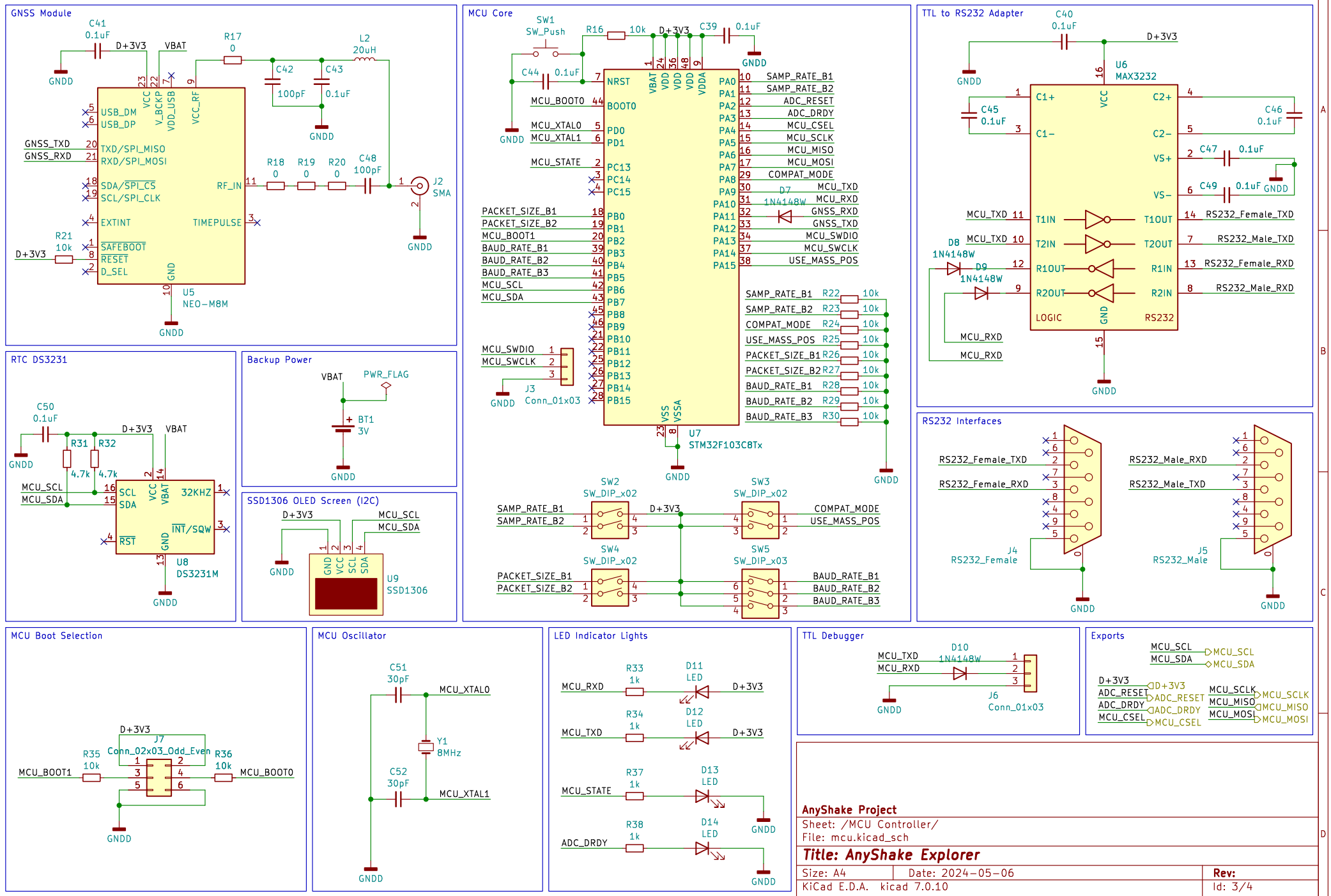
GNSS Module
C41 0.1uF
D+3V3
VBAT
R17 0
L2 20uH
C42 100pF
C43 0.1uF
GNDD
USB_DM
USB_DP
VCC
V_BCKP
VDD_USB
VCC_RF
GNSS_TXD
GNSS_RXD
TXD/SPI_MISO
RXD/SPI_MOSI
SDA/SPI_CS
SCL/SPI_CLK
EXTINT
SAFEBOOT
RESET
D_SEL
GND
RF_IN
TIMEPULSE
R18 0
R19 0
R20 0
C48 100pF
J2 SMA
R21 10k
U5 NEO-M8M
RTC DS3231
C50 0.1uF
R31 4.7k
R32 4.7k
MCU_SCL
MCU_SDA
SCL
SDA
32KHZ
INT/SQW
RST
U8 DS3231M
Backup Power
PWR_FLAG
BT1 3V
SSD1306 OLED Screen (I2C)
GND
VCC
SCL
SDA
U9 SSD1306
MCU Core
SW1 SW_Push
R16 10k
C39 0.1uF
C44 0.1uF
NRST
BOOT0
MCU_BOOT0
MCU_XTAL0
MCU_XTAL1
MCU_STATE
PACKET_SIZE_B1
PACKET_SIZE_B2
MCU_BOOT1
BAUD_RATE_B1
BAUD_RATE_B2
BAUD_RATE_B3
MCU_SCL
MCU_SDA
MCU_SWDIO
MCU_SWCLK
J3 Conn_01x03
VBAT
VDD
VDDA
VSS
VSSA
SAMP_RATE_B1
SAMP_RATE_B2
ADC_RESET
ADC_DRDY
MCU_CSEL
MCU_SCLK
MCU_MISO
MCU_MOSI
COMPAT_MODE
MCU_TXD
MCU_RXD
GNSS_RXD
GNSS_TXD
MCU_SWDIO
MCU_SWCLK
USE_MASS_POS
D7 1N4148W
U7 STM32F103C8Tx
R22 10k
R23 10k
R24 10k
R25 10k
R26 10k
R27 10k
R28 10k
R29 10k
R30 10k
SW2 SW_DIP_x02
SW3 SW_DIP_x02
SW4 SW_DIP_x02
SW5 SW_DIP_x03
TTL to RS232 Adapter
C40 0.1uF
U6 MAX3232
C45 0.1uF
C46 0.1uF
C47 0.1uF
C49 0.1uF
C1+
C1-
C2+
C2-
VS+
VS-
T1IN
T2IN
R1OUT
R2OUT
T1OUT
T2OUT
R1IN
R2IN
LOGIC
RS232
RS232_Female_TXD
RS232_Male_TXD
RS232_Female_RXD
RS232_Male_RXD
D8 1N4148W
D9 1N4148W
RS232 Interfaces
J4 RS232_Female
J5 RS232_Male
MCU Boot Selection
J7 Conn_02x03_Odd_Even
R35 10k
R36 10k
MCU_BOOT1
MCU_BOOT0
MCU Oscillator
C51 30pF
C52 30pF
Y1 8MHz
MCU_XTAL0
MCU_XTAL1
LED Indicator Lights
R33 1k
R34 1k
R37 1k
R38 1k
D11 LED
D12 LED
D13 LED
D14 LED
TTL Debugger
D10 1N4148W
J6 Conn_01x03
Exports
MCU_SCL
MCU_SDA
D+3V3
ADC_RESET
ADC_DRDY
MCU_CSEL
MCU_SCLK
MCU_MISO
MCU_MOSI
AnyShake Project
Sheet: /MCU Controller/
File: mcu.kicad_sch
Title: AnyShake Explorer
Size: A4
Date: 2024-05-06
Rev:
KiCad E.D.A. kicad 7.0.10
Id: 3/4

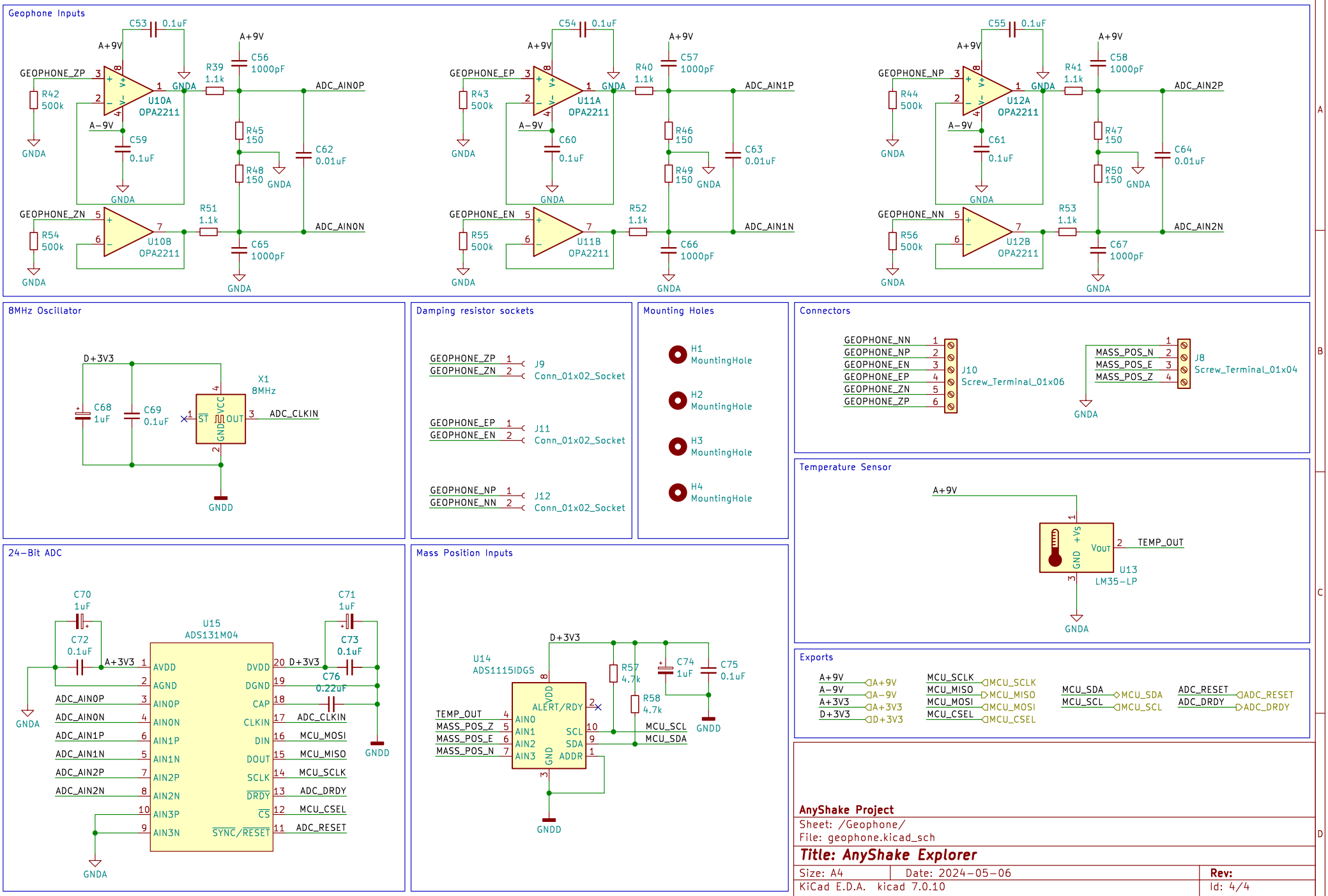
Geophone Inputs
GEOPHONE_ZP
GEOPHONE_ZN
GEOPHONE_EP
GEOPHONE_EN
GEOPHONE_NP
GEOPHONE_NN
U10A OPA2211
U10B OPA2211
U11A OPA2211
U11B OPA2211
U12A OPA2211
U12B OPA2211
ADC_AIN0P
ADC_AIN0N
ADC_AIN1P
ADC_AIN1N
ADC_AIN2P
ADC_AIN2N
A+9V
A−9V
GNDA
8MHz Oscillator
D+3V3
X1 8MHz
ADC_CLKIN
GNDD
Damping resistor sockets
J9 Conn_01x02_Socket
J11 Conn_01x02_Socket
J12 Conn_01x02_Socket
Mounting Holes
H1 MountingHole
H2 MountingHole
H3 MountingHole
H4 MountingHole
Connectors
J10 Screw_Terminal_01x06
J8 Screw_Terminal_01x04
MASS_POS_N
MASS_POS_E
MASS_POS_Z
Temperature Sensor
TEMP_OUT
U13 LM35-LP
24-Bit ADC
U15 ADS131M04
A+3V3
ADC_CLKIN
MCU_MOSI
MCU_MISO
MCU_SCLK
ADC_DRDY
MCU_CSEL
ADC_RESET
Mass Position Inputs
U14 ADS1115IDGS
MCU_SCL
MCU_SDA
Exports
MCU_SDA
MCU_SCL
ADC_RESET
ADC_DRDY
AnyShake Project
Sheet: /Geophone/
File: geophone.kicad_sch
Title: AnyShake Explorer
Size: A4
Date: 2024-05-06
Rev:
KiCad E.D.A. kicad 7.0.10
Id: 4/4