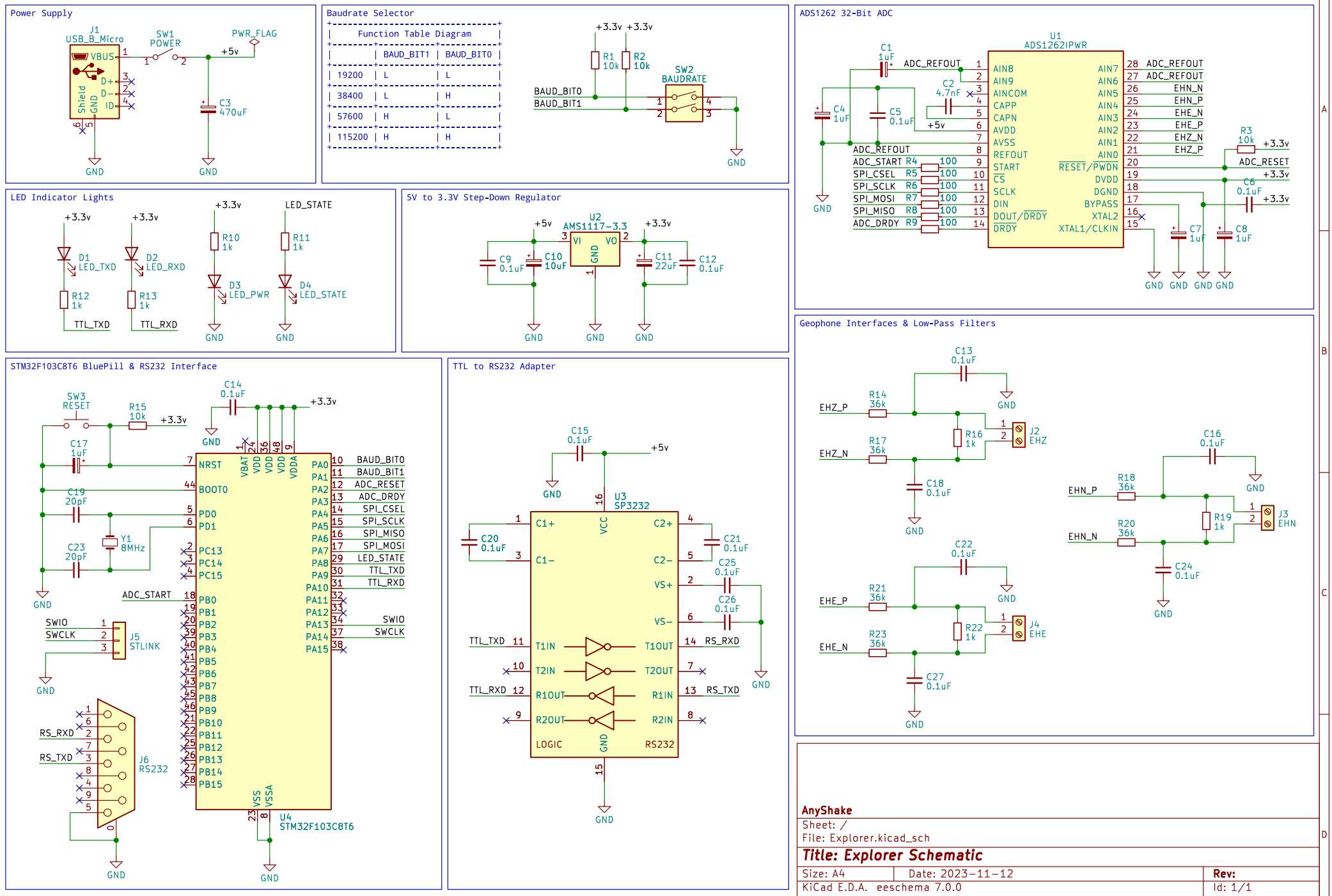
Power Supply
J1
USB_B_Micro
VBUS
D+
D-
ID
Shield
GND
SW1
POWER
PWR_FLAG
+5v
C3
470uF
GND
Baudrate Selector
Function Table Diagram
	BAUD_BIT1	BAUD_BIT0
19200	L	L
38400	L	H
57600	H	L
115200	H	H
+3.3v +3.3v
R1
10k
R2
10k
SW2
BAUDRATE
BAUD_BIT0
BAUD_BIT1
GND
ADS1262 32-Bit ADC
U1
ADS1262IPWR
C1
1uF
ADC_REFOUT
C2
4.7nF
C4
1uF
C5
0.1uF
+5v
AIN8
AIN9
AINCOM
CAPP
CAPN
AVDD
AVSS
REFOUT
START
CS
SCLK
DIN
DOUT/DRDY
DRDY
AIN7
AIN6
AIN5
AIN4
AIN3
AIN2
AIN1
AIN0
RESET/PWDN
DVDD
DGND
BYPASS
XTAL2
XTAL1/CLKIN
ADC_REFOUT
ADC_REFOUT
EHN_N
EHN_P
EHE_N
EHE_P
EHZ_N
EHZ_P
ADC_START R4 100
SPI_CSEL R5 100
SPI_SCLK R6 100
SPI_MOSI R7 100
SPI_MISO R8 100
ADC_DRDY R9 100
R3
10k
+3.3v
ADC_RESET
C6
0.1uF
C7
1uF
C8
1uF
GND GND GND GND
LED Indicator Lights
+3.3v
D1
LED_TXD
R12
1k
TTL_TXD
D2
LED_RXD
R13
1k
TTL_RXD
R10
1k
D3
LED_PWR
LED_STATE
R11
1k
D4
LED_STATE
5V to 3.3V Step-Down Regulator
U2
AMS1117-3.3
VI
VO
GND
C9
0.1uF
C10
10uF
C11
22uF
C12
0.1uF
Geophone Interfaces & Low-Pass Filters
C13
0.1uF
EHZ_P
R14
36k
EHZ_N
R17
36k
R16
1k
J2
EHZ
C18
0.1uF
C16
0.1uF
EHN_P
R18
36k
EHN_N
R20
36k
R19
1k
J3
EHN
C24
0.1uF
C22
0.1uF
EHE_P
R21
36k
EHE_N
R23
36k
R22
1k
J4
EHE
C27
0.1uF
STM32F103C8T6 BluePill & RS232 Interface
SW3
RESET
R15
10k
+3.3v
C14
0.1uF
C17
1uF
C19
20pF
C23
20pF
Y1
8MHz
NRST
BOOT0
PD0
PD1
PC13
PC14
PC15
PB0
PB1
PB2
PB3
PB4
PB5
PB6
PB7
PB8
PB9
PB10
PB11
PB12
PB13
PB14
PB15
VBAT
VDD
VDD
VDD
VDDA
VSS
VSSA
PA0
PA1
PA2
PA3
PA4
PA5
PA6
PA7
PA8
PA9
PA10
PA11
PA12
PA13
PA14
PA15
BAUD_BIT0
BAUD_BIT1
ADC_RESET
ADC_DRDY
SPI_CSEL
SPI_SCLK
SPI_MISO
SPI_MOSI
LED_STATE
TTL_TXD
TTL_RXD
ADC_START
SWIO
SWCLK
J5
STLINK
RS_RXD
RS_TXD
J6
RS232
U4
STM32F103C8T6
TTL to RS232 Adapter
C15
0.1uF
+5v
U3
SP3232
C1+
C1-
VCC
C2+
C2-
VS+
VS-
T1IN
T2IN
R1OUT
R2OUT
T1OUT
T2OUT
R1IN
R2IN
LOGIC
GND
RS232
C20
0.1uF
C21
0.1uF
C25
0.1uF
C26
0.1uF
TTL_TXD
TTL_RXD
RS_RXD
RS_TXD
AnyShake
Sheet: /
File: Explorer.kicad_sch
Title: Explorer Schematic
Size: A4
Date: 2023-11-12
Rev:
KiCad E.D.A. eeschema 7.0.0
Id: 1/1