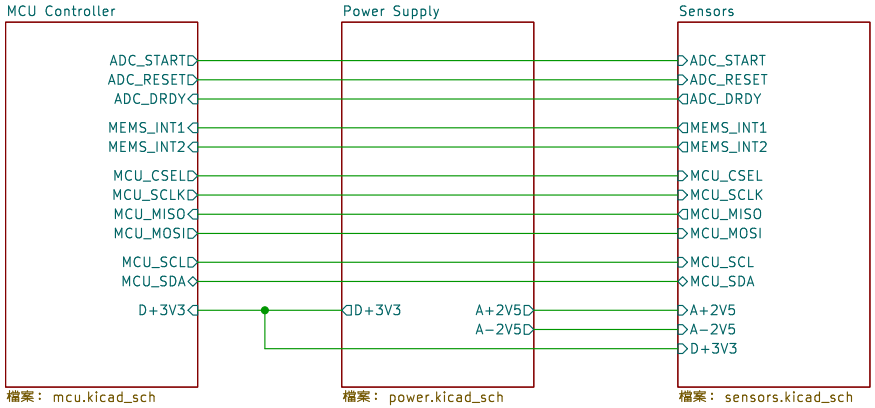

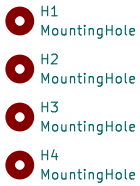

AnyShake Project

Sheet: /
File: Explorer.kicad_sch

Title: AnyShake Explorer

Size: A4	Date: 2024−05−06	**Rev:**
KiCad E.D.A. 8.0.3		Id: 1/4

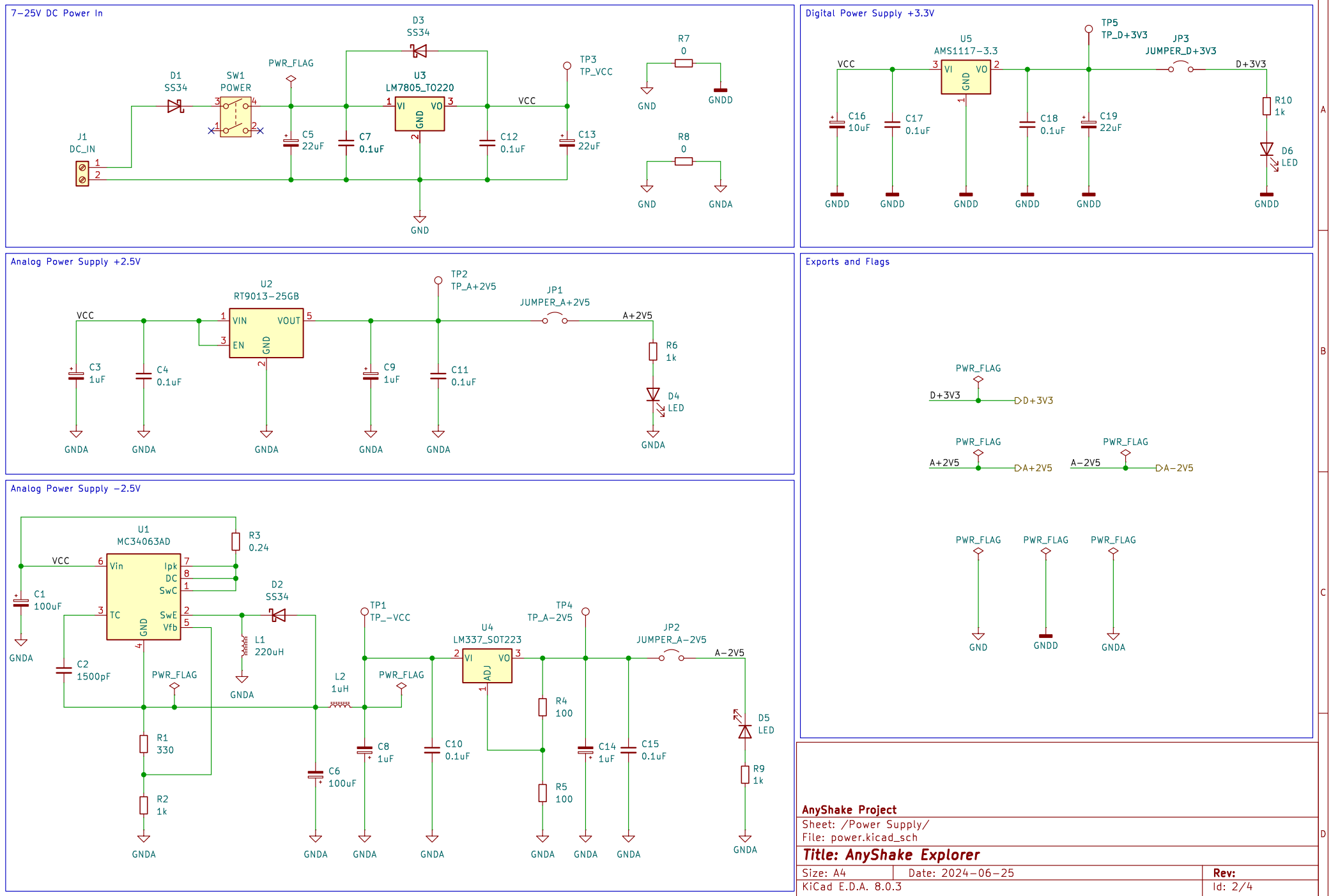
7-25V DC Power In
J1
DC_IN
D1
SS34
SW1
POWER
PWR_FLAG
C5
22uF
C7
0.1uF
D3
SS34
U3
LM7805_TO220
VI
VO
GND
VCC
C12
0.1uF
TP3
TP_VCC
C13
22uF
R7
0
R8
0
GND
GNDD
GNDA
Digital Power Supply +3.3V
U5
AMS1117-3.3
VCC
C16
10uF
C17
0.1uF
C18
0.1uF
C19
22uF
TP5
TP_D+3V3
JP3
JUMPER_D+3V3
D+3V3
R10
1k
D6
LED
Analog Power Supply +2.5V
U2
RT9013-25GB
VIN
VOUT
EN
C3
1uF
C4
0.1uF
C9
1uF
C11
0.1uF
TP2
TP_A+2V5
JP1
JUMPER_A+2V5
A+2V5
R6
1k
D4
LED
Exports and Flags
PWR_FLAG
D+3V3
A+2V5
A-2V5
Analog Power Supply -2.5V
U1
MC34063AD
Vin
Ipk
DC
SwC
TC
SwE
Vfb
R3
0.24
C1
100uF
C2
1500pF
D2
SS34
L1
220uH
L2
1uH
R1
330
R2
1k
C6
100uF
C8
1uF
C10
0.1uF
TP1
TP_-VCC
U4
LM337_SOT223
ADJ
R4
100
R5
100
TP4
TP_A-2V5
C14
1uF
C15
0.1uF
JP2
JUMPER_A-2V5
A-2V5
D5
LED
R9
1k
AnyShake Project
Sheet: /Power Supply/
File: power.kicad_sch
Title: AnyShake Explorer
Size: A4
Date: 2024-06-25
Rev:
KiCad E.D.A. 8.0.3
Id: 2/4

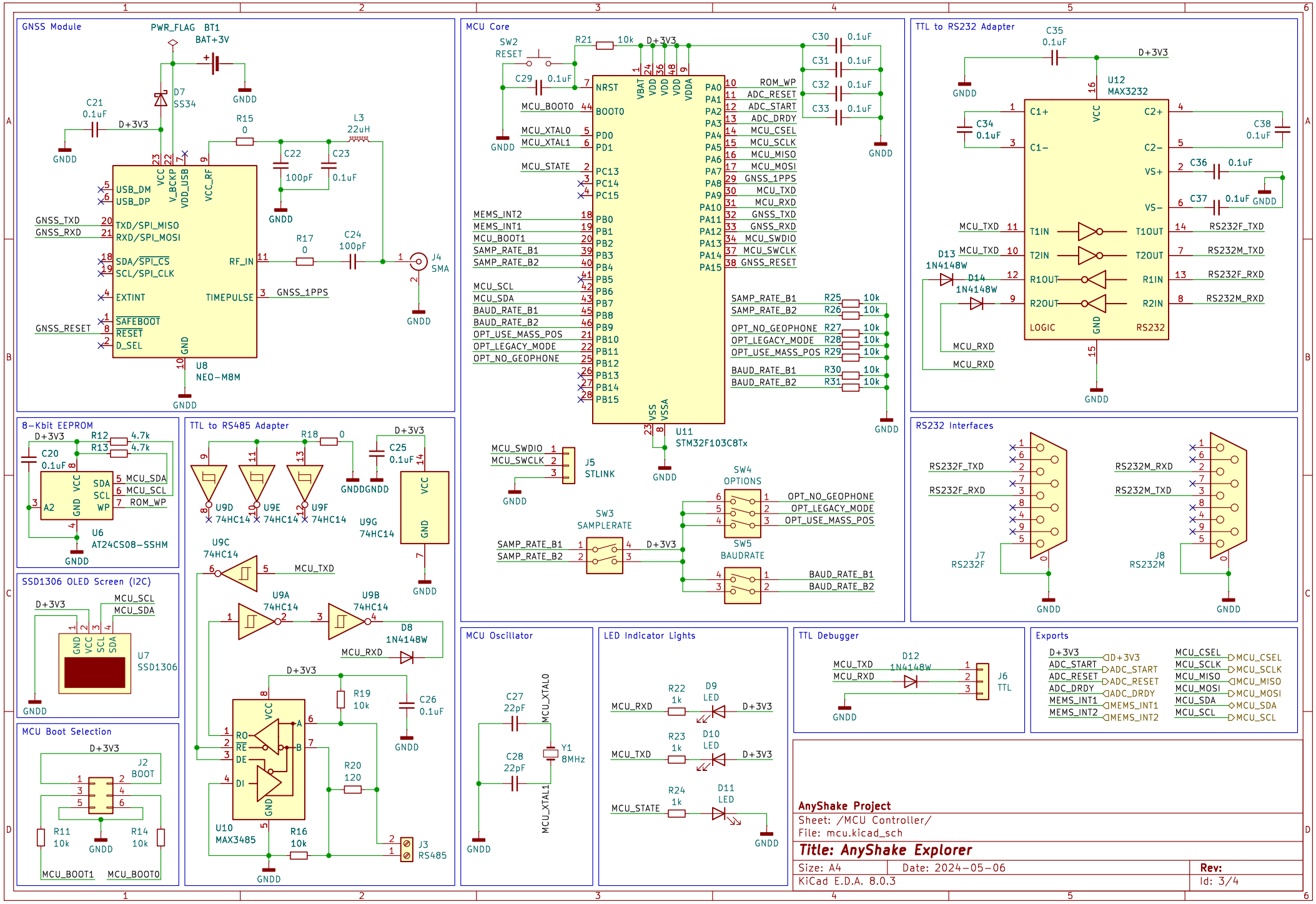
GNSS Module
PWR_FLAG
BT1
BAT+3V
D7
SS34
C21
0.1uF
D+3V3
GNDD
R15
0
L3
22uH
C22
100pF
C23
0.1uF
VCC
V_BCKP
VDD_USB
VCC_RF
USB_DM
USB_DP
GNSS_TXD
GNSS_RXD
TXD/SPI_MISO
RXD/SPI_MOSI
SDA/SPI_CS
SCL/SPI_CLK
EXTINT
GNSS_RESET
SAFEBOOT
RESET
D_SEL
RF_IN
TIMEPULSE
GND
R17
0
C24
100pF
J4
SMA
GNSS_1PPS
U8
NEO-M8M
MCU Core
SW2
RESET
R21
10k
C29
0.1uF
NRST
BOOT0
MCU_BOOT0
MCU_XTAL0
MCU_XTAL1
PD0
PD1
MCU_STATE
PC13
PC14
PC15
MEMS_INT2
MEMS_INT1
MCU_BOOT1
SAMP_RATE_B1
SAMP_RATE_B2
PB0
PB1
PB2
PB3
PB4
PB5
MCU_SCL
MCU_SDA
PB6
PB7
BAUD_RATE_B1
BAUD_RATE_B2
PB8
PB9
OPT_USE_MASS_POS
OPT_LEGACY_MODE
OPT_NO_GEOPHONE
PB10
PB11
PB12
PB13
PB14
PB15
VBAT
VDD
VDDA
VSS
VSSA
PA0
PA1
PA2
PA3
PA4
PA5
PA6
PA7
PA8
PA9
PA10
PA11
PA12
PA13
PA14
PA15
ROM_WP
ADC_RESET
ADC_START
ADC_DRDY
MCU_CSEL
MCU_SCLK
MCU_MISO
MCU_MOSI
GNSS_1PPS
MCU_TXD
MCU_RXD
GNSS_TXD
GNSS_RXD
MCU_SWDIO
MCU_SWCLK
MCU_SWCLK
GNSS_RESET
C30
0.1uF
C31
0.1uF
C32
0.1uF
C33
0.1uF
R25
10k
R26
10k
OPT_NO_GEOPHONE
R27
10k
OPT_LEGACY_MODE
R28
10k
OPT_USE_MASS_POS
R29
10k
BAUD_RATE_B1
R30
10k
BAUD_RATE_B2
R31
10k
U11
STM32F103C8Tx
J5
STLINK
SW4
OPTIONS
SW3
SAMPLERATE
SW5
BAUDRATE
TTL to RS232 Adapter
C35
0.1uF
U12
MAX3232
C1+
C1-
C2+
C2-
VS+
VS-
C34
0.1uF
C38
0.1uF
C36
0.1uF
C37
0.1uF
T1IN
T2IN
R1OUT
R2OUT
T1OUT
T2OUT
R1IN
R2IN
LOGIC
RS232
RS232F_TXD
RS232M_TXD
RS232F_RXD
RS232M_RXD
D13
1N4148W
D14
1N4148W
MCU_RXD
8-Kbit EEPROM
C20
0.1uF
R12
4.7k
R13
4.7k
SDA
SCL
WP
A2
U6
AT24CS08-SSHM
RS232 Interfaces
J7
RS232F
J8
RS232M
SSD1306 OLED Screen (I2C)
U7
SSD1306
TTL to RS485 Adapter
R18
0
C25
0.1uF
U9D
U9E
U9F
U9G
74HC14
U9C
U9A
U9B
D8
1N4148W
R19
10k
C26
0.1uF
R20
120
R16
10k
U10
MAX3485
RO
RE
DE
DI
J3
RS485
MCU Boot Selection
J2
BOOT
R11
10k
R14
10k
MCU_BOOT1
MCU Oscillator
C27
22pF
C28
22pF
Y1
8MHz
LED Indicator Lights
R22
1k
D9
LED
R23
1k
D10
LED
R24
1k
D11
LED
TTL Debugger
D12
1N4148W
J6
TTL
Exports
D+3V3
ADC_START
ADC_RESET
ADC_DRDY
MEMS_INT1
MEMS_INT2
MCU_CSEL
MCU_SCLK
MCU_MISO
MCU_MOSI
MCU_SDA
MCU_SCL
AnyShake Project
Sheet: /MCU Controller/
File: mcu.kicad_sch
Title: AnyShake Explorer
Size: A4
Date: 2024-05-06
Rev:
KiCad E.D.A. 8.0.3
Id: 3/4

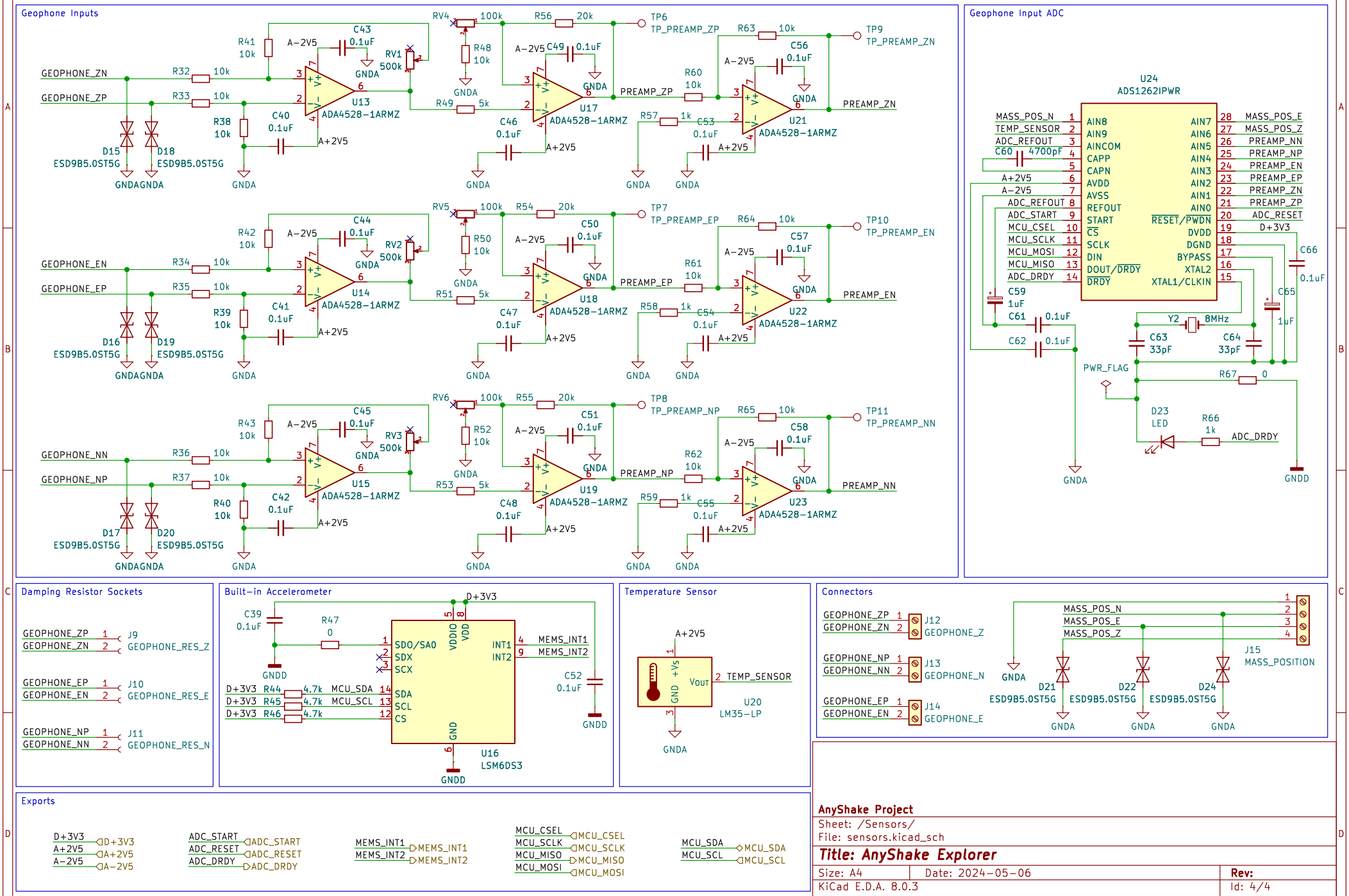
Geophone Inputs
GEOPHONE_ZN
GEOPHONE_ZP
GEOPHONE_EN
GEOPHONE_EP
GEOPHONE_NN
GEOPHONE_NP
R32 10k
R33 10k
R34 10k
R35 10k
R36 10k
R37 10k
R38 10k
R39 10k
R40 10k
R41 10k
R42 10k
R43 10k
R48 10k
R49 5k
R50 10k
R51 5k
R52 10k
R53 5k
RV1 500k
RV2 500k
RV3 500k
RV4 100k
RV5 100k
RV6 100k
C40 0.1uF
C41 0.1uF
C42 0.1uF
C43 0.1uF
C44 0.1uF
C45 0.1uF
C46 0.1uF
C47 0.1uF
C48 0.1uF
C49 0.1uF
C50 0.1uF
C51 0.1uF
C53 0.1uF
C54 0.1uF
C55 0.1uF
C56 0.1uF
C57 0.1uF
C58 0.1uF
R56 20k
R54 20k
R55 20k
R57 1k
R58 1k
R59 1k
R60 10k
R61 10k
R62 10k
R63 10k
R64 10k
R65 10k
TP6 TP_PREAMP_ZP
TP7 TP_PREAMP_EP
TP8 TP_PREAMP_NP
TP9 TP_PREAMP_ZN
TP10 TP_PREAMP_EN
TP11 TP_PREAMP_NN
PREAMP_ZP
PREAMP_EP
PREAMP_NP
PREAMP_ZN
PREAMP_EN
PREAMP_NN
U13 ADA4528-1ARMZ
U14 ADA4528-1ARMZ
U15 ADA4528-1ARMZ
U17 ADA4528-1ARMZ
U18 ADA4528-1ARMZ
U19 ADA4528-1ARMZ
U21 ADA4528-1ARMZ
U22 ADA4528-1ARMZ
U23 ADA4528-1ARMZ
D15 ESD9B5.0ST5G
D16 ESD9B5.0ST5G
D17 ESD9B5.0ST5G
D18 ESD9B5.0ST5G
D19 ESD9B5.0ST5G
D20 ESD9B5.0ST5G
A-2V5
A+2V5
GNDA
Geophone Input ADC
U24 ADS1262IPWR
MASS_POS_N
TEMP_SENSOR
ADC_REFOUT
ADC_START
MCU_CSEL
MCU_SCLK
MCU_MOSI
MCU_MISO
ADC_DRDY
AIN8
AIN9
AINCOM
CAPP
CAPN
AVDD
AVSS
REFOUT
START
CS
SCLK
DIN
DOUT/DRDY
DRDY
AIN7
AIN6
AIN5
AIN4
AIN3
AIN2
AIN1
AIN0
RESET/PWDN
DVDD
DGND
BYPASS
XTAL2
XTAL1/CLKIN
MASS_POS_E
MASS_POS_Z
PREAMP_NN
PREAMP_NP
PREAMP_EN
PREAMP_EP
PREAMP_ZN
PREAMP_ZP
ADC_RESET
D+3V3
C60 4700pF
C59 1uF
C61 0.1uF
C62 0.1uF
C63 33pF
C64 33pF
C65 1uF
C66 0.1uF
Y2 8MHz
PWR_FLAG
R67 0
D23 LED
R66 1k
GNDD
Damping Resistor Sockets
J9 GEOPHONE_RES_Z
J10 GEOPHONE_RES_E
J11 GEOPHONE_RES_N
Built-in Accelerometer
D+3V3
C39 0.1uF
R47 0
SDO/SA0
SDX
SCX
SDA
SCL
CS
VDDIO
VDD
INT1
INT2
GND
MEMS_INT1
MEMS_INT2
R44 4.7k MCU_SDA
R45 4.7k MCU_SCL
R46 4.7k
C52 0.1uF
U16 LSM6DS3
Temperature Sensor
A+2V5
+Vs
GND
VOUT
TEMP_SENSOR
U20 LM35-LP
Connectors
J12 GEOPHONE_Z
J13 GEOPHONE_N
J14 GEOPHONE_E
J15 MASS_POSITION
D21 ESD9B5.0ST5G
D22 ESD9B5.0ST5G
D24 ESD9B5.0ST5G
Exports
D+3V3
A+2V5
A-2V5
ADC_START
ADC_RESET
ADC_DRDY
MEMS_INT1
MEMS_INT2
MCU_CSEL
MCU_SCLK
MCU_MISO
MCU_MOSI
MCU_SDA
MCU_SCL
AnyShake Project
Sheet: /Sensors/
File: sensors.kicad_sch
Title: AnyShake Explorer
Size: A4
Date: 2024-05-06
Rev:
KiCad E.D.A. 8.0.3
Id: 4/4