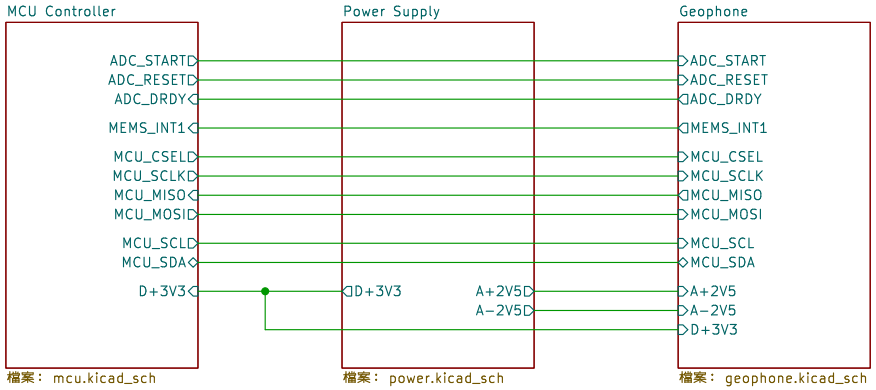

AnyShake Project

Sheet: /

File: Explorer.kicad_sch

Title: AnyShake Explorer

Size: A4	Date: 2024−05−06	**Rev:**
KiCad E.D.A. 8.0.3		Id: 1/4

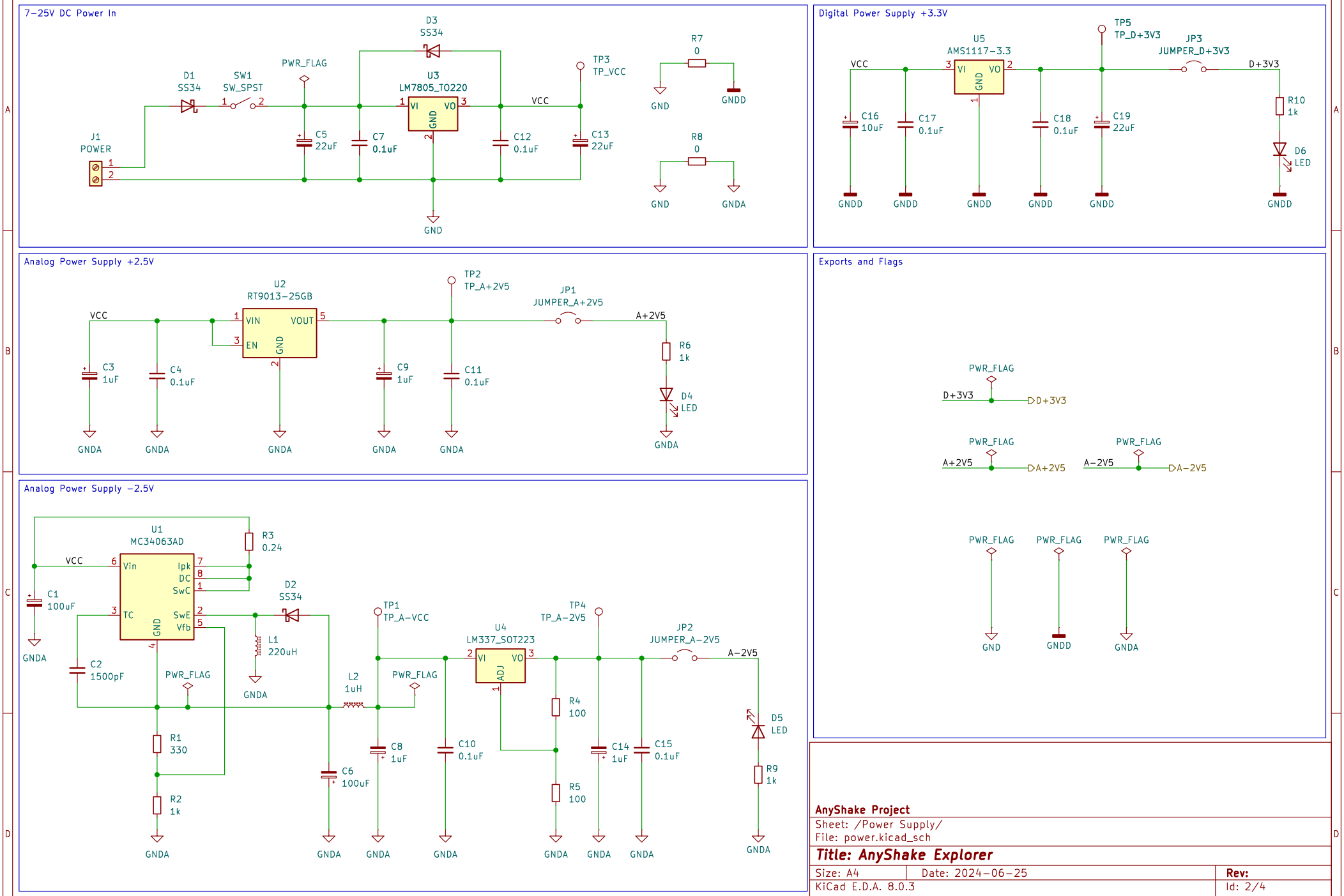

AnyShake Project

Sheet: /Power Supply/

File: power.kicad_sch

Title: AnyShake Explorer

Size: A4	Date: 2024-06-25	**Rev:**
KiCad E.D.A. 8.0.3		Id: 2/4

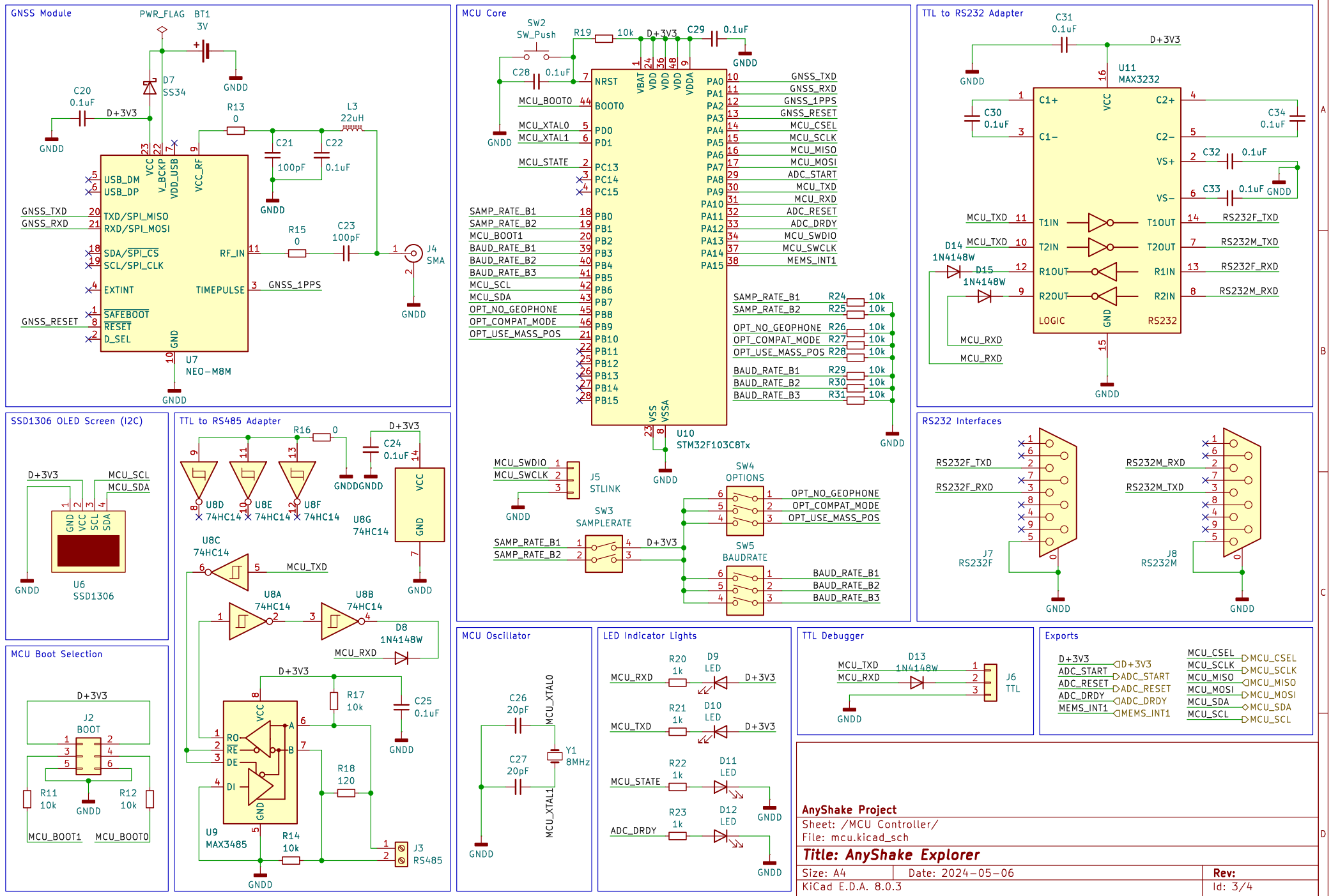
GNSS Module
PWR_FLAG
BT1
3V
D7
SS34
GNDD
C20
0.1uF
D+3V3
R13
0
L3
22uH
C21
100pF
C22
0.1uF
VCC
V_BCKP
VDD_USB
VCC_RF
USB_DM
USB_DP
GNSS_TXD
GNSS_RXD
TXD/SPI_MISO
RXD/SPI_MOSI
SDA/SPI_CS
SCL/SPI_CLK
EXTINT
GNSS_RESET
SAFEBOOT
RESET
D_SEL
RF_IN
TIMEPULSE
GNSS_1PPS
R15
0
C23
100pF
J4
SMA
GND
U7
NEO-M8M
MCU Core
SW2
SW_Push
R19
10k
C29
0.1uF
C28
0.1uF
MCU_BOOT0
MCU_XTAL0
MCU_XTAL1
MCU_STATE
NRST
BOOT0
PD0
PD1
PC13
PC14
PC15
VBAT
VDD
VDDA
SAMP_RATE_B1
SAMP_RATE_B2
MCU_BOOT1
BAUD_RATE_B1
BAUD_RATE_B2
BAUD_RATE_B3
MCU_SCL
MCU_SDA
OPT_NO_GEOPHONE
OPT_COMPAT_MODE
OPT_USE_MASS_POS
PB0
PB1
PB2
PB3
PB4
PB5
PB6
PB7
PB8
PB9
PB10
PB11
PB12
PB13
PB14
PB15
PA0
PA1
PA2
PA3
PA4
PA5
PA6
PA7
PA8
PA9
PA10
PA11
PA12
PA13
PA14
PA15
GNSS_TXD
GNSS_RXD
GNSS_1PPS
GNSS_RESET
MCU_STATE
MCU_TXD
MCU_RXD
ADC_START
ADC_RESET
ADC_DRDY
MCU_SWDIO
MCU_SWCLK
MEMS_INT1
R24
R25
R26
R27
R28
R29
R30
R31
10k
VSS
VSSA
U10
STM32F103C8Tx
J5
STLINK
SW4
OPTIONS
SW3
SAMPLERATE
SW5
BAUDRATE
TTL to RS232 Adapter
C31
0.1uF
U11
MAX3232
C1+
C1-
C2+
C2-
VS+
VS-
C30
0.1uF
C34
0.1uF
C32
0.1uF
C33
0.1uF
T1IN
T2IN
R1OUT
R2OUT
T1OUT
T2OUT
R1IN
R2IN
LOGIC
RS232
RS232F_TXD
RS232M_TXD
RS232F_RXD
RS232M_RXD
D14
1N4148W
D15
1N4148W
SSD1306 OLED Screen (I2C)
MCU_SCL
MCU_SDA
GND
VCC
SCL
SDA
U6
SSD1306
TTL to RS485 Adapter
R16
0
C24
0.1uF
U8D
U8E
U8F
U8G
74HC14
U8C
U8A
U8B
D8
1N4148W
R17
10k
C25
0.1uF
R18
120
R14
10k
RO
RE
DE
DI
A
B
U9
MAX3485
J3
RS485
RS232 Interfaces
J7
RS232F
J8
RS232M
MCU Boot Selection
J2
BOOT
R11
10k
R12
10k
MCU_BOOT1
MCU_BOOT0
MCU Oscillator
C26
20pF
C27
20pF
Y1
8MHz
MCU_XTAL0
MCU_XTAL1
LED Indicator Lights
R20
1k
D9
LED
R21
1k
D10
LED
R22
1k
D11
LED
R23
1k
D12
LED
TTL Debugger
D13
1N4148W
J6
TTL
Exports
D+3V3
ADC_START
ADC_RESET
ADC_DRDY
MEMS_INT1
MCU_CSEL
MCU_SCLK
MCU_MISO
MCU_MOSI
MCU_SDA
MCU_SCL
AnyShake Project
Sheet: /MCU Controller/
File: mcu.kicad_sch
Title: AnyShake Explorer
Size: A4
Date: 2024-05-06
Rev:
KiCad E.D.A. 8.0.3
Id: 3/4

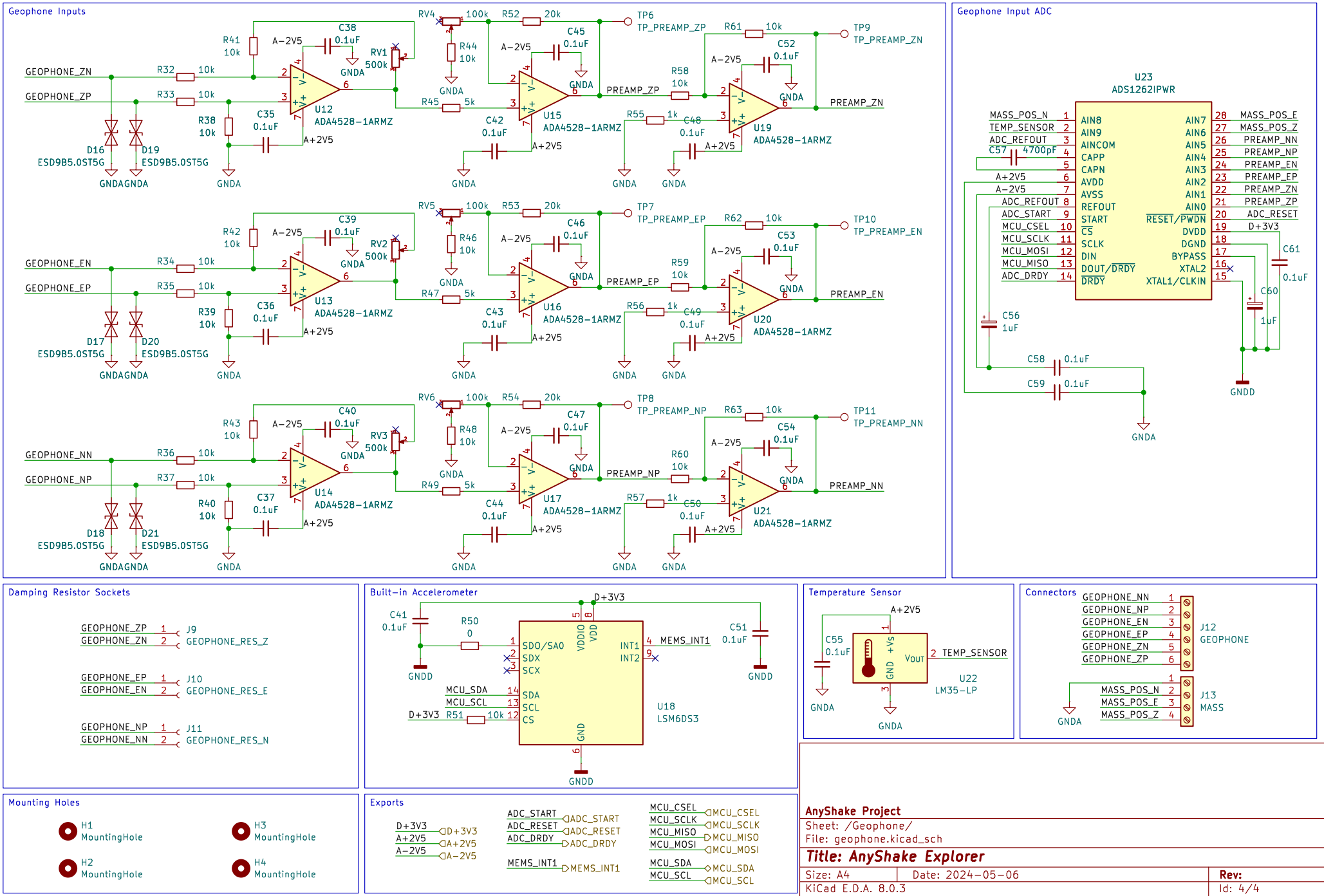
Geophone Inputs
GEOPHONE_ZN
GEOPHONE_ZP
GEOPHONE_EN
GEOPHONE_EP
GEOPHONE_NN
GEOPHONE_NP
R32 10k
R33 10k
R34 10k
R35 10k
R36 10k
R37 10k
R41 10k
R42 10k
R43 10k
R38 10k
R39 10k
R40 10k
C35 0.1uF
C36 0.1uF
C37 0.1uF
C38 0.1uF
C39 0.1uF
C40 0.1uF
RV1 500k
RV2 500k
RV3 500k
U12 ADA4528-1ARMZ
U13 ADA4528-1ARMZ
U14 ADA4528-1ARMZ
D16 ESD9B5.0ST5G
D19 ESD9B5.0ST5G
D17 ESD9B5.0ST5G
D20 ESD9B5.0ST5G
D18 ESD9B5.0ST5G
D21 ESD9B5.0ST5G
A-2V5
A+2V5
GNDA
RV4 100k
RV5 100k
RV6 100k
R44 10k
R46 10k
R48 10k
R45 5k
R47 5k
R49 5k
R52 20k
R53 20k
R54 20k
C42 0.1uF
C43 0.1uF
C44 0.1uF
C45 0.1uF
C46 0.1uF
C47 0.1uF
U15 ADA4528-1ARMZ
U16 ADA4528-1ARMZ
U17 ADA4528-1ARMZ
TP6 TP_PREAMP_ZP
TP7 TP_PREAMP_EP
TP8 TP_PREAMP_NP
PREAMP_ZP
PREAMP_EP
PREAMP_NP
R55 1k
R56 1k
R57 1k
C48 0.1uF
C49 0.1uF
C50 0.1uF
R61 10k
R62 10k
R63 10k
R58 10k
R59 10k
R60 10k
C52 0.1uF
C53 0.1uF
C54 0.1uF
U19 ADA4528-1ARMZ
U20 ADA4528-1ARMZ
U21 ADA4528-1ARMZ
TP9 TP_PREAMP_ZN
TP10 TP_PREAMP_EN
TP11 TP_PREAMP_NN
PREAMP_ZN
PREAMP_EN
PREAMP_NN
Geophone Input ADC
U23 ADS1262IPWR
MASS_POS_N
TEMP_SENSOR
ADC_REFOUT
C57 4700pF
A+2V5
A-2V5
ADC_REFOUT
ADC_START
MCU_CSEL
MCU_SCLK
MCU_MOSI
MCU_MISO
ADC_DRDY
AIN8
AIN9
AINCOM
CAPP
CAPN
AVDD
AVSS
REFOUT
START
CS
SCLK
DIN
DOUT/DRDY
DRDY
AIN7
AIN6
AIN5
AIN4
AIN3
AIN2
AIN1
AIN0
RESET/PWDN
DVDD
DGND
BYPASS
XTAL2
XTAL1/CLKIN
MASS_POS_E
MASS_POS_Z
PREAMP_NN
PREAMP_NP
PREAMP_EN
PREAMP_EP
PREAMP_ZN
PREAMP_ZP
ADC_RESET
D+3V3
C61 0.1uF
C60 1uF
C56 1uF
C58 0.1uF
C59 0.1uF
GNDD
Damping Resistor Sockets
GEOPHONE_ZP 1 J9 GEOPHONE_RES_Z
GEOPHONE_ZN 2
GEOPHONE_EP 1 J10 GEOPHONE_RES_E
GEOPHONE_EN 2
GEOPHONE_NP 1 J11 GEOPHONE_RES_N
GEOPHONE_NN 2
Built-in Accelerometer
D+3V3
C41 0.1uF
R50 0
C51 0.1uF
SDO/SA0
SDX
SCX
SDA
SCL
CS
VDDIO
VDD
GND
INT1
INT2
MEMS_INT1
MCU_SDA
MCU_SCL
R51 10k
U18 LSM6DS3
Temperature Sensor
A+2V5
C55 0.1uF
+Vs
GND
VOUT
TEMP_SENSOR
U22 LM35-LP
Connectors
GEOPHONE_NN 1
GEOPHONE_NP 2
GEOPHONE_EN 3
GEOPHONE_EP 4
GEOPHONE_ZN 5
GEOPHONE_ZP 6
J12 GEOPHONE
MASS_POS_N 2
MASS_POS_E 3
MASS_POS_Z 4
J13 MASS
Mounting Holes
H1 MountingHole
H2 MountingHole
H3 MountingHole
H4 MountingHole
Exports
D+3V3
A+2V5
A-2V5
ADC_START
ADC_RESET
ADC_DRDY
MEMS_INT1
MCU_CSEL
MCU_SCLK
MCU_MISO
MCU_MOSI
MCU_SDA
MCU_SCL
AnyShake Project
Sheet: /Geophone/
File: geophone.kicad_sch
Title: AnyShake Explorer
Size: A4
Date: 2024-05-06
Rev:
KiCad E.D.A. 8.0.3
Id: 4/4