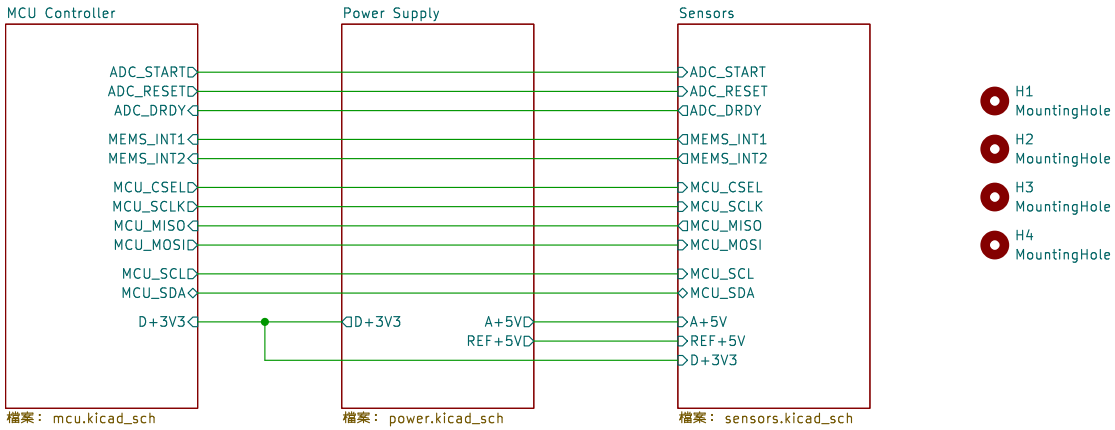

AnyShake Project

Sheet: /
File: Explorer.kicad_sch

Title: AnyShake Explorer

Size: A4	Date: 2024-05-06	**Rev:**
KiCad E.D.A. 8.0.3		Id: 1/4

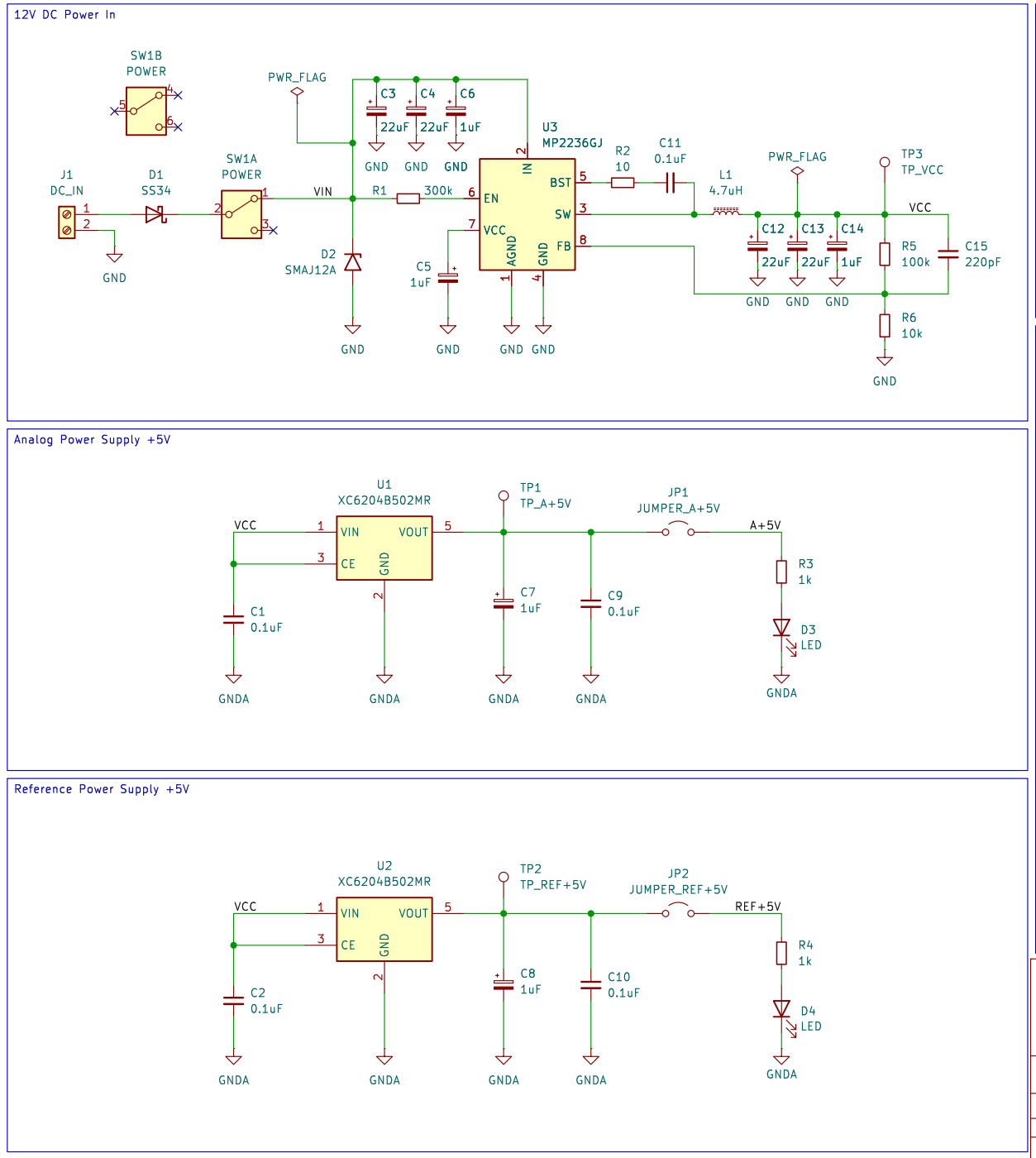

AnyShake Project

Sheet: /Power Supply/

File: power.kicad_sch

Title: AnyShake Explorer

Size: A4	Date: 2024-06-25	**Rev:**
KiCad E.D.A. 8.0.3		Id: 2/4

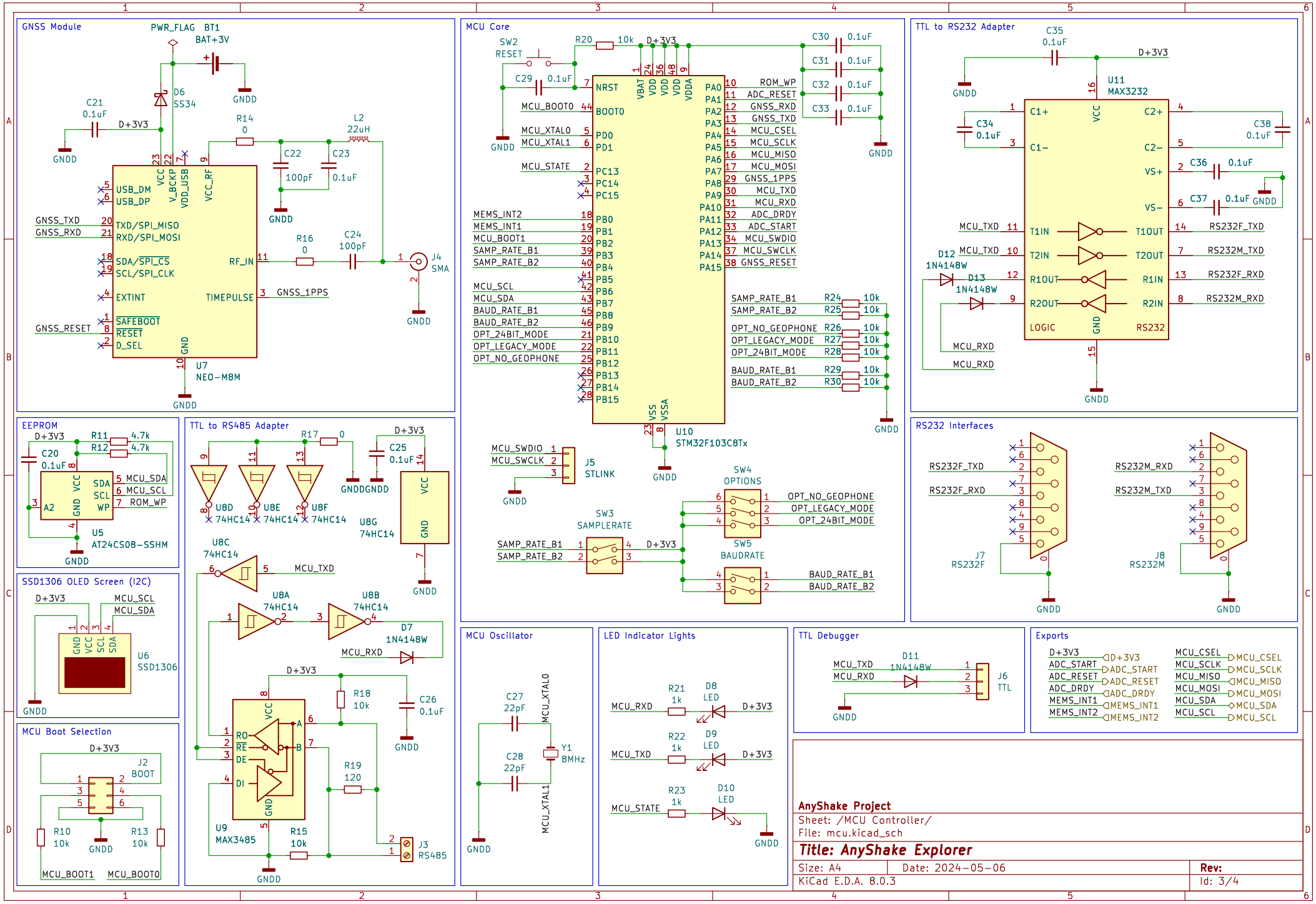
GNSS Module
PWR_FLAG
BT1
BAT+3V
D6
SS34
C21
0.1uF
D+3V3
GNDD
R14
0
L2
22uH
C22
100pF
C23
0.1uF
VCC
V_BCKP
VDD_USB
VCC_RF
USB_DM
USB_DP
GNSS_TXD
GNSS_RXD
TXD/SPI_MISO
RXD/SPI_MOSI
SDA/SPI_CS
SCL/SPI_CLK
EXTINT
GNSS_RESET
SAFEBOOT
RESET
D_SEL
RF_IN
TIMEPULSE
GND
R16
0
C24
100pF
J4
SMA
GNSS_1PPS
U7
NEO-M8M
MCU Core
SW2
RESET
R20
10k
C29
0.1uF
NRST
BOOT0
MCU_BOOT0
MCU_XTAL0
MCU_XTAL1
MCU_STATE
PD0
PD1
PC13
PC14
PC15
MEMS_INT2
MEMS_INT1
MCU_BOOT1
SAMP_RATE_B1
SAMP_RATE_B2
MCU_SCL
MCU_SDA
BAUD_RATE_B1
BAUD_RATE_B2
OPT_24BIT_MODE
OPT_LEGACY_MODE
OPT_NO_GEOPHONE
PB0
PB1
PB2
PB3
PB4
PB5
PB6
PB7
PB8
PB9
PB10
PB11
PB12
PB13
PB14
PB15
VBAT
VDD
VDDA
VSS
VSSA
PA0
PA1
PA2
PA3
PA4
PA5
PA6
PA7
PA8
PA9
PA10
PA11
PA12
PA13
PA14
PA15
ROM_WP
ADC_RESET
GNSS_RXD
GNSS_TXD
MCU_CSEL
MCU_SCLK
MCU_MISO
MCU_MOSI
GNSS_1PPS
MCU_TXD
MCU_RXD
ADC_DRDY
ADC_START
MCU_SWDIO
MCU_SWCLK
GNSS_RESET
C30
C31
C32
C33
0.1uF
R24
R25
R26
R27
R28
R29
R30
10k
OPT_NO_GEOPHONE
OPT_LEGACY_MODE
OPT_24BIT_MODE
BAUD_RATE_B1
BAUD_RATE_B2
U10
STM32F103C8Tx
J5
STLINK
SW4
OPTIONS
SW3
SAMPLERATE
SW5
BAUDRATE
TTL to RS232 Adapter
C35
0.1uF
U11
MAX3232
C1+
C1-
C2+
C2-
VS+
VS-
C34
C38
C36
C37
T1IN
T2IN
R1OUT
R2OUT
T1OUT
T2OUT
R1IN
R2IN
LOGIC
RS232
RS232F_TXD
RS232M_TXD
RS232F_RXD
RS232M_RXD
D12
D13
1N4148W
EEPROM
C20
0.1uF
R11
R12
4.7k
SDA
SCL
WP
A2
U5
AT24CS08-SSHM
TTL to RS485 Adapter
R17
0
C25
0.1uF
U8D
U8E
U8F
U8G
74HC14
U8C
U8A
U8B
MCU_TXD
D7
1N4148W
MCU_RXD
R18
10k
C26
0.1uF
R19
120
R15
10k
RO
RE
DE
DI
A
B
U9
MAX3485
J3
RS485
RS232 Interfaces
J7
RS232F
J8
RS232M
SSD1306 OLED Screen (I2C)
U6
SSD1306
MCU Boot Selection
J2
BOOT
R10
10k
R13
10k
MCU_BOOT1
MCU_BOOT0
MCU Oscillator
C27
22pF
C28
22pF
Y1
8MHz
MCU_XTAL0
MCU_XTAL1
LED Indicator Lights
R21
1k
R22
1k
R23
1k
D8
D9
D10
LED
TTL Debugger
D11
1N4148W
J6
TTL
Exports
D+3V3
ADC_START
ADC_RESET
ADC_DRDY
MEMS_INT1
MEMS_INT2
MCU_CSEL
MCU_SCLK
MCU_MISO
MCU_MOSI
MCU_SDA
MCU_SCL
AnyShake Project
Sheet: /MCU Controller/
File: mcu.kicad_sch
Title: AnyShake Explorer
Size: A4
Date: 2024-05-06
Rev:
KiCad E.D.A. 8.0.3
Id: 3/4

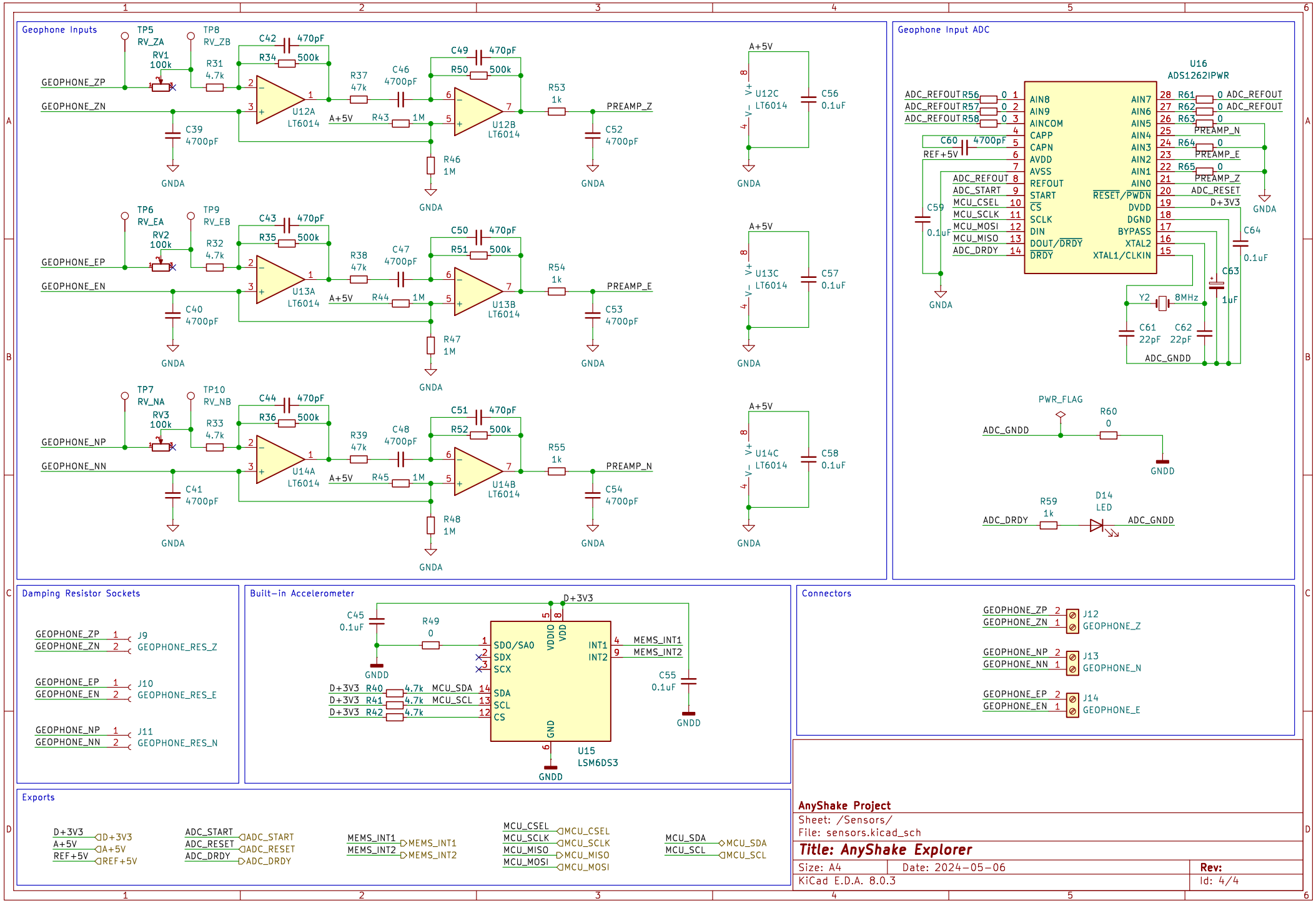
Geophone Inputs
TP5 RV_ZA
TP8 RV_ZB
RV1 100k
GEOPHONE_ZP
GEOPHONE_ZN
R31 4.7k
C42 470pF
R34 500k
U12A LT6014
R37 47k
C46 4700pF
C49 470pF
R50 500k
U12B LT6014
R53 1k
PREAMP_Z
C39 4700pF
R43 1M
R46 1M
C52 4700pF
A+5V
U12C LT6014
C56 0.1uF
TP6 RV_EA
TP9 RV_EB
RV2 100k
GEOPHONE_EP
GEOPHONE_EN
R32 4.7k
C43 470pF
R35 500k
U13A LT6014
R38 47k
C47 4700pF
C50 470pF
R51 500k
U13B LT6014
R54 1k
PREAMP_E
C40 4700pF
R44 1M
R47 1M
C53 4700pF
U13C LT6014
C57 0.1uF
TP7 RV_NA
TP10 RV_NB
RV3 100k
GEOPHONE_NP
GEOPHONE_NN
R33 4.7k
C44 470pF
R36 500k
U14A LT6014
R39 47k
C48 4700pF
C51 470pF
R52 500k
U14B LT6014
R55 1k
PREAMP_N
C41 4700pF
R45 1M
R48 1M
C54 4700pF
U14C LT6014
C58 0.1uF
GNDA
Geophone Input ADC
U16 ADS1262IPWR
ADC_REFOUT R56 0
ADC_REFOUT R57 0
ADC_REFOUT R58 0
C60 4700pF
REF+5V
C59 0.1uF
AIN8
AIN9
AINCOM
CAPP
CAPN
AVDD
AVSS
REFOUT
START
CS
SCLK
DIN
DOUT/DRDY
DRDY
ADC_REFOUT
ADC_START
MCU_CSEL
MCU_SCLK
MCU_MOSI
MCU_MISO
ADC_DRDY
AIN7
AIN6
AIN5
AIN4
AIN3
AIN2
AIN1
AIN0
RESET/PWDN
DVDD
DGND
BYPASS
XTAL2
XTAL1/CLKIN
R61 0 ADC_REFOUT
R62 0 ADC_REFOUT
R63 0 PREAMP_N
R64 0 PREAMP_E
R65 0 PREAMP_Z
ADC_RESET
D+3V3
C64 0.1uF
C63 1uF
Y2 8MHz
C61 22pF
C62 22pF
ADC_GNDD
PWR_FLAG
R60 0
GNDD
R59 1k
D14 LED
Damping Resistor Sockets
GEOPHONE_ZP 1 J9 GEOPHONE_RES_Z
GEOPHONE_ZN 2
GEOPHONE_EP 1 J10 GEOPHONE_RES_E
GEOPHONE_EN 2
GEOPHONE_NP 1 J11 GEOPHONE_RES_N
GEOPHONE_NN 2
Built-in Accelerometer
D+3V3
C45 0.1uF
R49 0
SDO/SA0
SDX
SCX
SDA
SCL
CS
VDDIO
VDD
GND
INT1
INT2
MEMS_INT1
MEMS_INT2
D+3V3 R40 4.7k MCU_SDA
D+3V3 R41 4.7k MCU_SCL
D+3V3 R42 4.7k
C55 0.1uF
U15 LSM6DS3
Connectors
GEOPHONE_ZP 2 J12 GEOPHONE_Z
GEOPHONE_ZN 1
GEOPHONE_NP 2 J13 GEOPHONE_N
GEOPHONE_NN 1
GEOPHONE_EP 2 J14 GEOPHONE_E
GEOPHONE_EN 1
Exports
D+3V3 D+3V3
A+5V A+5V
REF+5V REF+5V
ADC_START ADC_START
ADC_RESET ADC_RESET
ADC_DRDY ADC_DRDY
MEMS_INT1 MEMS_INT1
MEMS_INT2 MEMS_INT2
MCU_CSEL MCU_CSEL
MCU_SCLK MCU_SCLK
MCU_MISO MCU_MISO
MCU_MOSI MCU_MOSI
MCU_SDA MCU_SDA
MCU_SCL MCU_SCL
AnyShake Project
Sheet: /Sensors/
File: sensors.kicad_sch
Title: AnyShake Explorer
Size: A4
Date: 2024-05-06
Rev:
KiCad E.D.A. 8.0.3
Id: 4/4