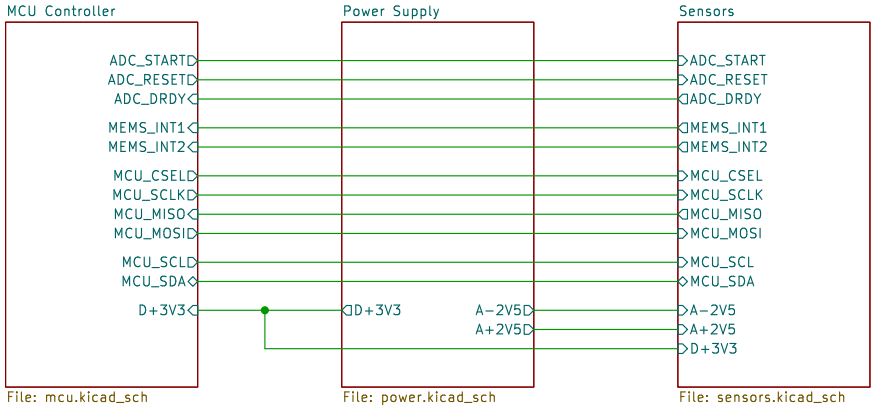

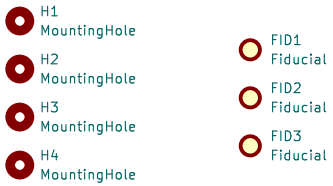

AnyShake Project

Sheet: /
File: Explorer.kicad_sch

Title: AnyShake Explorer

Size: A4	Date: 2025−01−06	**Rev: 20250106**
KiCad E.D.A. 8.0.8		Id: 1/4

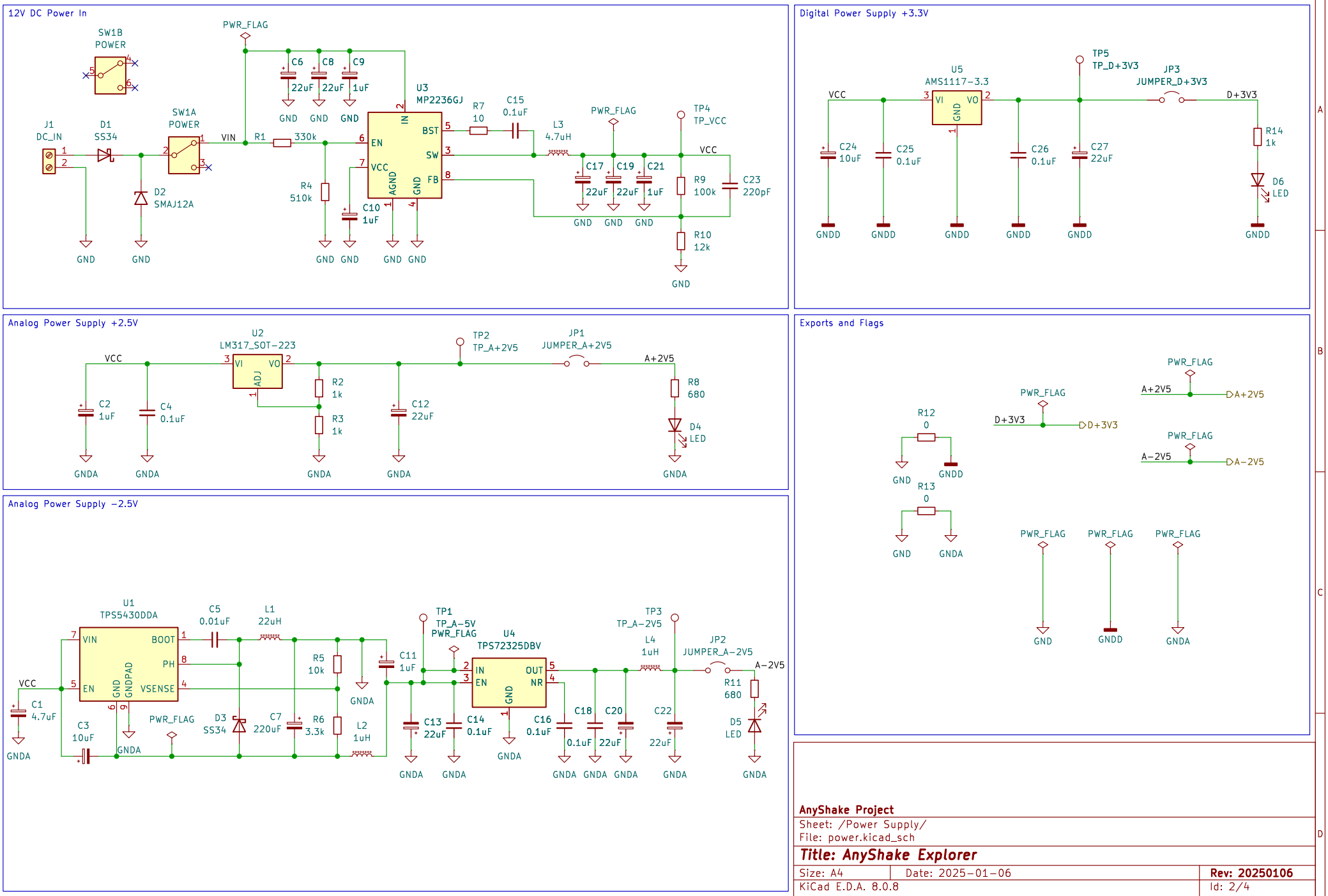

AnyShake Project

Sheet: /Power Supply/

File: power.kicad_sch

Title: AnyShake Explorer

Size: A4	Date: 2025-01-06	**Rev: 20250106**
KiCad E.D.A. 8.0.8		Id: 2/4

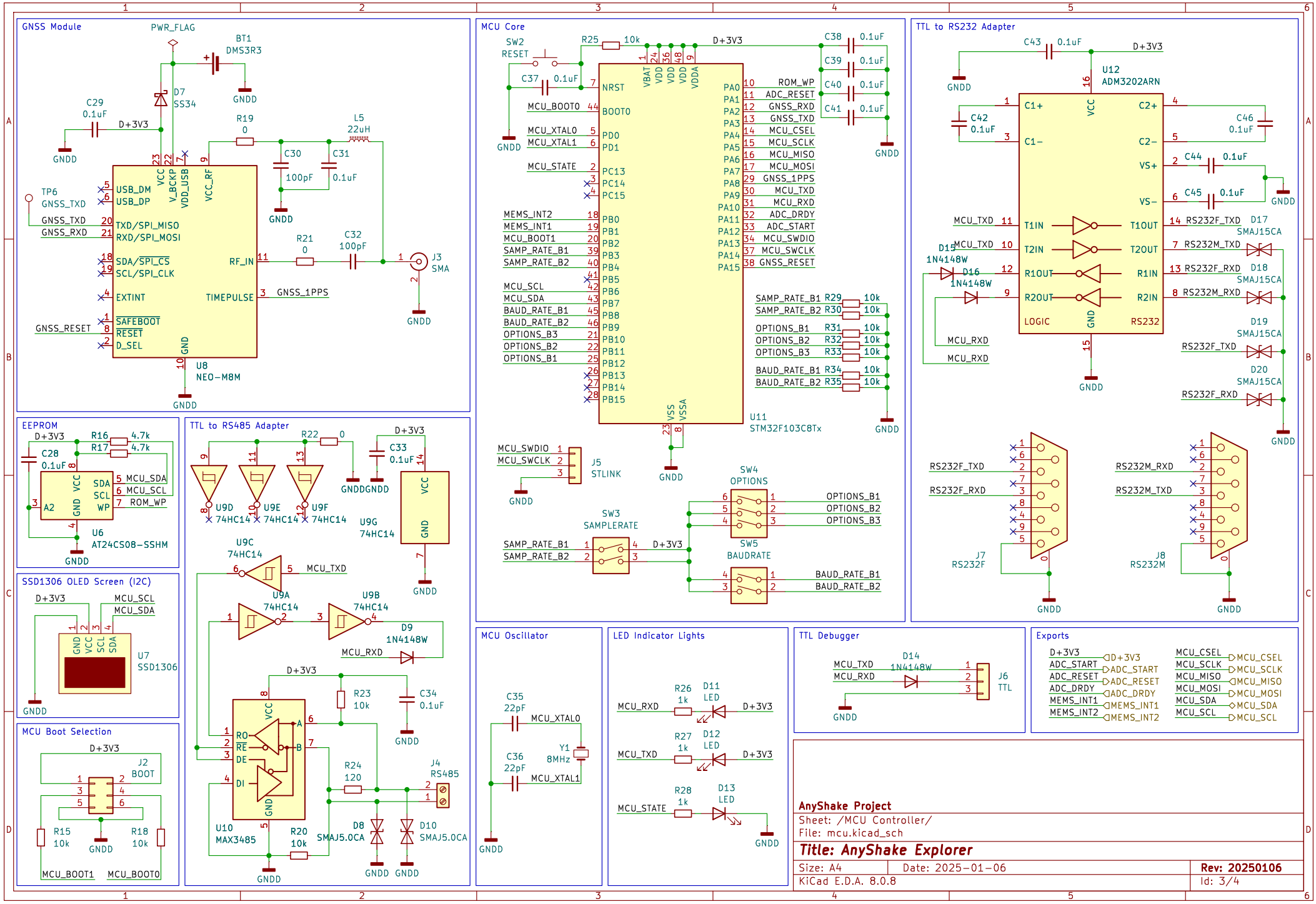
GNSS Module
PWR_FLAG
BT1
DMS3R3
D7
SS34
C29
0.1uF
D+3V3
GNDD
R19
0
L5
22uH
C30
100pF
C31
0.1uF
TP6
GNSS_TXD
GNSS_TXD
GNSS_RXD
USB_DM
USB_DP
TXD/SPI_MISO
RXD/SPI_MOSI
SDA/SPI_CS
SCL/SPI_CLK
EXTINT
SAFEBOOT
RESET
D_SEL
GNSS_RESET
VCC
V_BCKP
VDD_USB
VCC_RF
RF_IN
TIMEPULSE
GND
GNSS_1PPS
R21
0
C32
100pF
J3
SMA
U8
NEO-M8M
MCU Core
SW2
RESET
R25
10k
C37
0.1uF
NRST
BOOT0
MCU_BOOT0
MCU_XTAL0
MCU_XTAL1
PD0
PD1
MCU_STATE
PC13
PC14
PC15
MEMS_INT2
MEMS_INT1
MCU_BOOT1
SAMP_RATE_B1
SAMP_RATE_B2
PB4
PB5
MCU_SCL
MCU_SDA
BAUD_RATE_B1
BAUD_RATE_B2
OPTIONS_B3
OPTIONS_B2
OPTIONS_B1
PB0
PB1
PB2
PB3
PB6
PB7
PB8
PB9
PB10
PB11
PB12
PB13
PB14
PB15
VBAT
VDD
VDDA
VSS
VSSA
PA0
PA1
PA2
PA3
PA4
PA5
PA6
PA7
PA8
PA9
PA10
PA11
PA12
PA13
PA14
PA15
ROM_WP
ADC_RESET
GNSS_RXD
GNSS_TXD
MCU_CSEL
MCU_SCLK
MCU_MISO
MCU_MOSI
GNSS_1PPS
MCU_TXD
MCU_RXD
ADC_DRDY
ADC_START
MCU_SWDIO
MCU_SWCLK
GNSS_RESET
C38
C39
C40
C41
0.1uF
R29
R30
R31
R32
R33
R34
R35
10k
U11
STM32F103C8Tx
J5
STLINK
SW4
OPTIONS
SW3
SAMPLERATE
SW5
BAUDRATE
TTL to RS232 Adapter
C43
0.1uF
U12
ADM3202ARN
C1+
C1-
C2+
C2-
VS+
VS-
T1IN
T2IN
R1OUT
R2OUT
T1OUT
T2OUT
R1IN
R2IN
LOGIC
RS232
C42
C46
C44
C45
RS232F_TXD
RS232M_TXD
RS232F_RXD
RS232M_RXD
D15
1N4148W
D16
1N4148W
D17
SMAJ15CA
D18
SMAJ15CA
D19
SMAJ15CA
D20
SMAJ15CA
J7
RS232F
J8
RS232M
EEPROM
R16
4.7k
R17
4.7k
C28
0.1uF
SDA
SCL
WP
A2
U6
AT24CS08-SSHM
TTL to RS485 Adapter
R22
0
C33
0.1uF
U9D
U9E
U9F
U9G
74HC14
U9C
U9A
U9B
MCU_TXD
D9
1N4148W
MCU_RXD
R23
10k
C34
0.1uF
RO
RE
DE
DI
A
B
U10
MAX3485
R24
120
J4
RS485
R20
10k
D8
SMAJ5.0CA
D10
SMAJ5.0CA
SSD1306 OLED Screen (I2C)
U7
SSD1306
MCU Boot Selection
J2
BOOT
R15
10k
R18
10k
MCU_BOOT1
MCU_BOOT0
MCU Oscillator
C35
22pF
C36
22pF
Y1
8MHz
LED Indicator Lights
R26
1k
D11
LED
R27
1k
D12
LED
R28
1k
D13
LED
TTL Debugger
D14
1N4148W
J6
TTL
Exports
D+3V3
ADC_START
ADC_RESET
ADC_DRDY
MEMS_INT1
MEMS_INT2
MCU_CSEL
MCU_SCLK
MCU_MISO
MCU_MOSI
MCU_SDA
MCU_SCL
AnyShake Project
Sheet: /MCU Controller/
File: mcu.kicad_sch
Title: AnyShake Explorer
Size: A4
Date: 2025-01-06
Rev: 20250106
KiCad E.D.A. 8.0.8
Id: 3/4

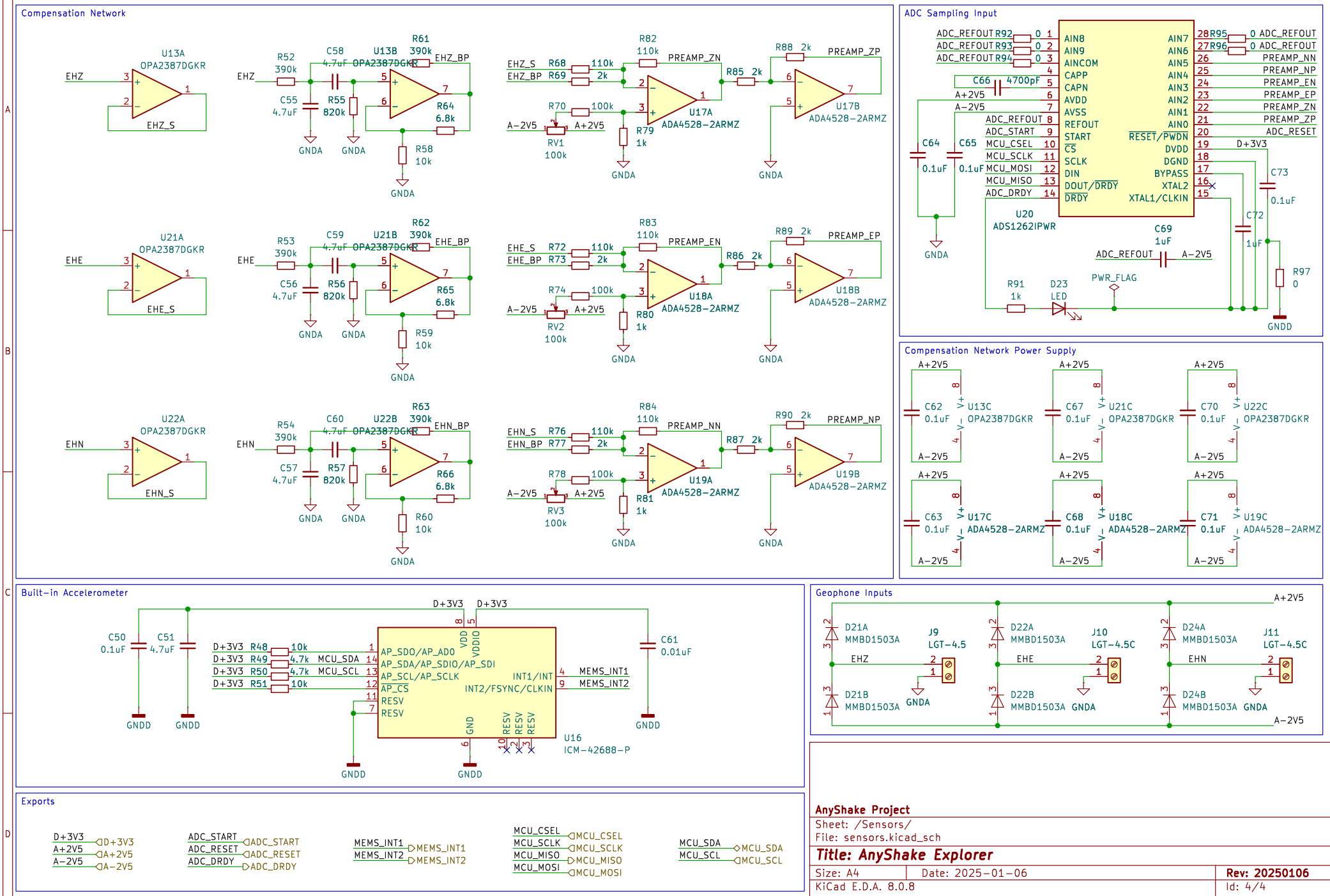
Compensation Network
U13A OPA2387DGKR
EHZ
EHZ_S
R52 390k
C58 4.7uF
U13B OPA2387DGKR
R61 390k
EHZ_BP
C55 4.7uF
R55 820k
R64 6.8k
R58 10k
GNDA
R82 110k
PREAMP_ZN
EHZ_S R68 110k
EHZ_BP R69 2k
R70 100k
A−2V5 A+2V5
RV1 100k
R79 1k
U17A ADA4528−2ARMZ
R85 2k
R88 2k
PREAMP_ZP
U17B ADA4528−2ARMZ
U21A OPA2387DGKR
EHE
EHE_S
R53 390k
C59 4.7uF
U21B OPA2387DGKR
R62 390k
EHE_BP
C56 4.7uF
R56 820k
R65 6.8k
R59 10k
R83 110k
PREAMP_EN
EHE_S R72 110k
EHE_BP R73 2k
R74 100k
RV2 100k
R80 1k
U18A ADA4528−2ARMZ
R86 2k
R89 2k
PREAMP_EP
U18B ADA4528−2ARMZ
U22A OPA2387DGKR
EHN
EHN_S
R54 390k
C60 4.7uF
U22B OPA2387DGKR
R63 390k
EHN_BP
C57 4.7uF
R57 820k
R66 6.8k
R60 10k
R84 110k
PREAMP_NN
EHN_S R76 110k
EHN_BP R77 2k
R78 100k
RV3 100k
R81 1k
U19A ADA4528−2ARMZ
R87 2k
R90 2k
PREAMP_NP
U19B ADA4528−2ARMZ
ADC Sampling Input
ADC_REFOUT R92 0
ADC_REFOUT R93 0
ADC_REFOUT R94 0
R95 0 ADC_REFOUT
R96 0 ADC_REFOUT
PREAMP_NN
PREAMP_NP
PREAMP_EN
PREAMP_EP
PREAMP_ZN
PREAMP_ZP
ADC_RESET
C66 4700pF
A+2V5
A−2V5
ADC_REFOUT
ADC_START
MCU_CSEL
MCU_SCLK
MCU_MOSI
MCU_MISO
ADC_DRDY
AIN8
AIN9
AINCOM
CAPP
CAPN
AVDD
AVSS
REFOUT
START
CS
SCLK
DIN
DOUT/DRDY
DRDY
AIN7
AIN6
AIN5
AIN4
AIN3
AIN2
AIN1
AIN0
RESET/PWDN
DVDD
DGND
BYPASS
XTAL2
XTAL1/CLKIN
D+3V3
C64 0.1uF
C65 0.1uF
C73 0.1uF
C72 1uF
U20 ADS1262IPWR
C69 1uF
ADC_REFOUT A−2V5
R97 0
R91 1k
D23 LED
PWR_FLAG
GNDD
Compensation Network Power Supply
A+2V5
A−2V5
C62 0.1uF U13C OPA2387DGKR
C67 0.1uF U21C OPA2387DGKR
C70 0.1uF U22C OPA2387DGKR
C63 0.1uF U17C ADA4528−2ARMZ
C68 0.1uF U18C ADA4528−2ARMZ
C71 0.1uF U19C ADA4528−2ARMZ
Built−in Accelerometer
D+3V3
C50 0.1uF
C51 4.7uF
D+3V3 R48 10k
D+3V3 R49 4.7k MCU_SDA
D+3V3 R50 4.7k MCU_SCL
D+3V3 R51 10k
AP_SDO/AP_AD0
AP_SDA/AP_SDIO/AP_SDI
AP_SCL/AP_SCLK
AP_CS
RESV
VDD
VDDIO
INT1/INT
INT2/FSYNC/CLKIN
GND
MEMS_INT1
MEMS_INT2
C61 0.01uF
GNDD
U16 ICM−42688−P
Geophone Inputs
D21A MMBD1503A
D21B MMBD1503A
J9 LGT−4.5
EHZ
D22A MMBD1503A
D22B MMBD1503A
J10 LGT−4.5C
EHE
D24A MMBD1503A
D24B MMBD1503A
J11 LGT−4.5C
EHN
Exports
D+3V3 D+3V3
A+2V5 A+2V5
A−2V5 A−2V5
ADC_START ADC_START
ADC_RESET ADC_RESET
ADC_DRDY ADC_DRDY
MEMS_INT1 MEMS_INT1
MEMS_INT2 MEMS_INT2
MCU_CSEL MCU_CSEL
MCU_SCLK MCU_SCLK
MCU_MISO MCU_MISO
MCU_MOSI MCU_MOSI
MCU_SDA MCU_SDA
MCU_SCL MCU_SCL
AnyShake Project
Sheet: /Sensors/
File: sensors.kicad_sch
Title: AnyShake Explorer
Size: A4
Date: 2025−01−06
Rev: 20250106
KiCad E.D.A. 8.0.8
Id: 4/4