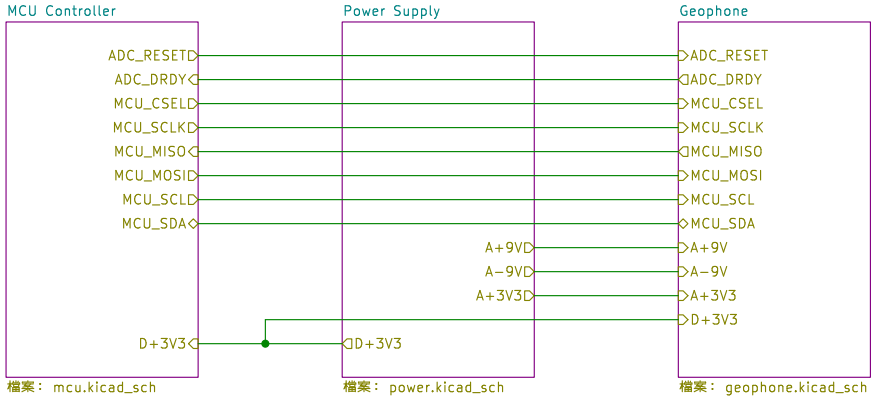

AnyShake Project

Sheet: /
File: Explorer.kicad_sch

Title: AnyShake Explorer

Size: A4	Date: 2024−05−06	**Rev:**
KiCad E.D.A. kicad 7.0.10		Id: 1/4

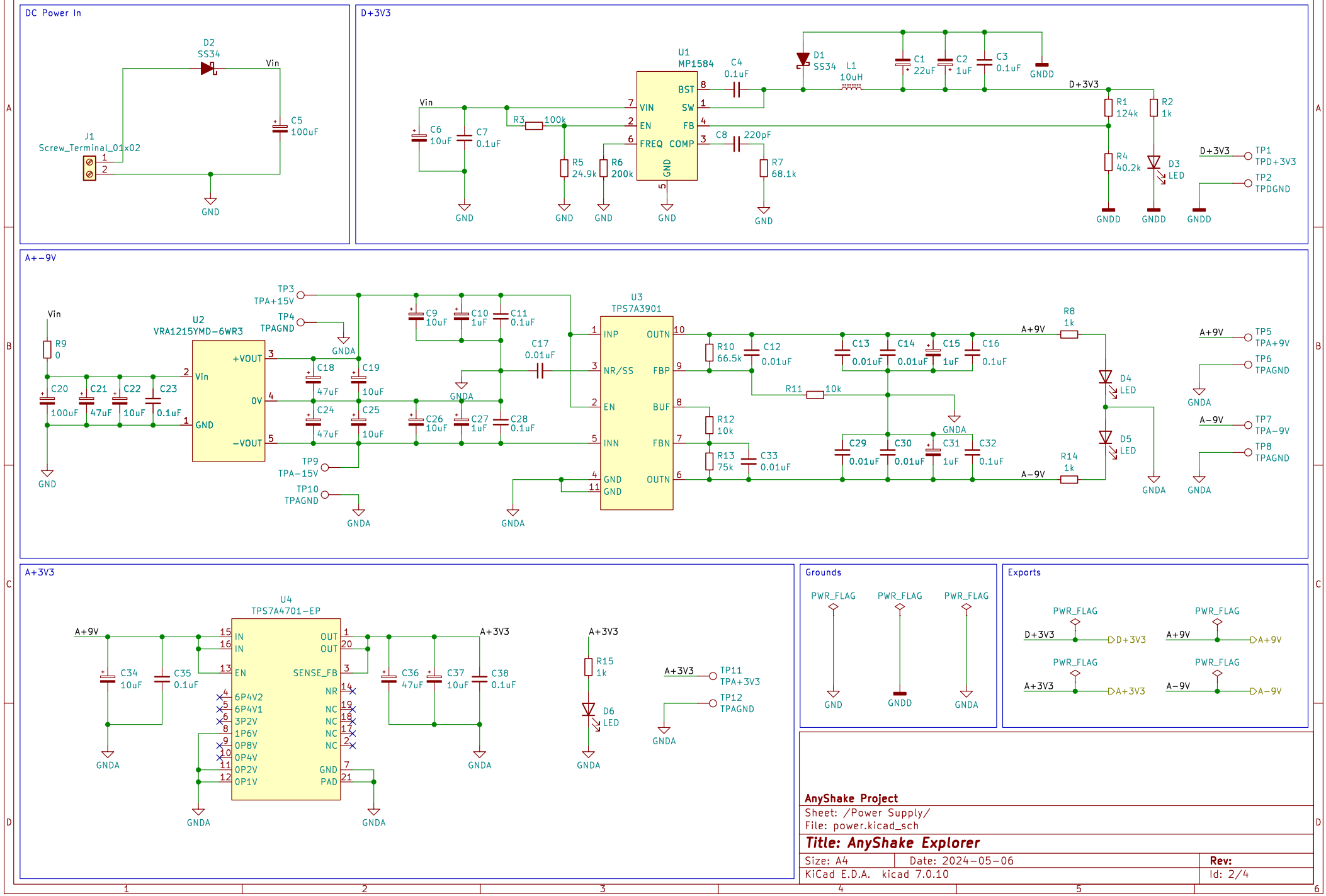

AnyShake Project

Sheet: /Power Supply/

File: power.kicad_sch

Title: AnyShake Explorer

Size: A4	Date: 2024-05-06	Rev:
KiCad E.D.A. kicad 7.0.10		Id: 2/4

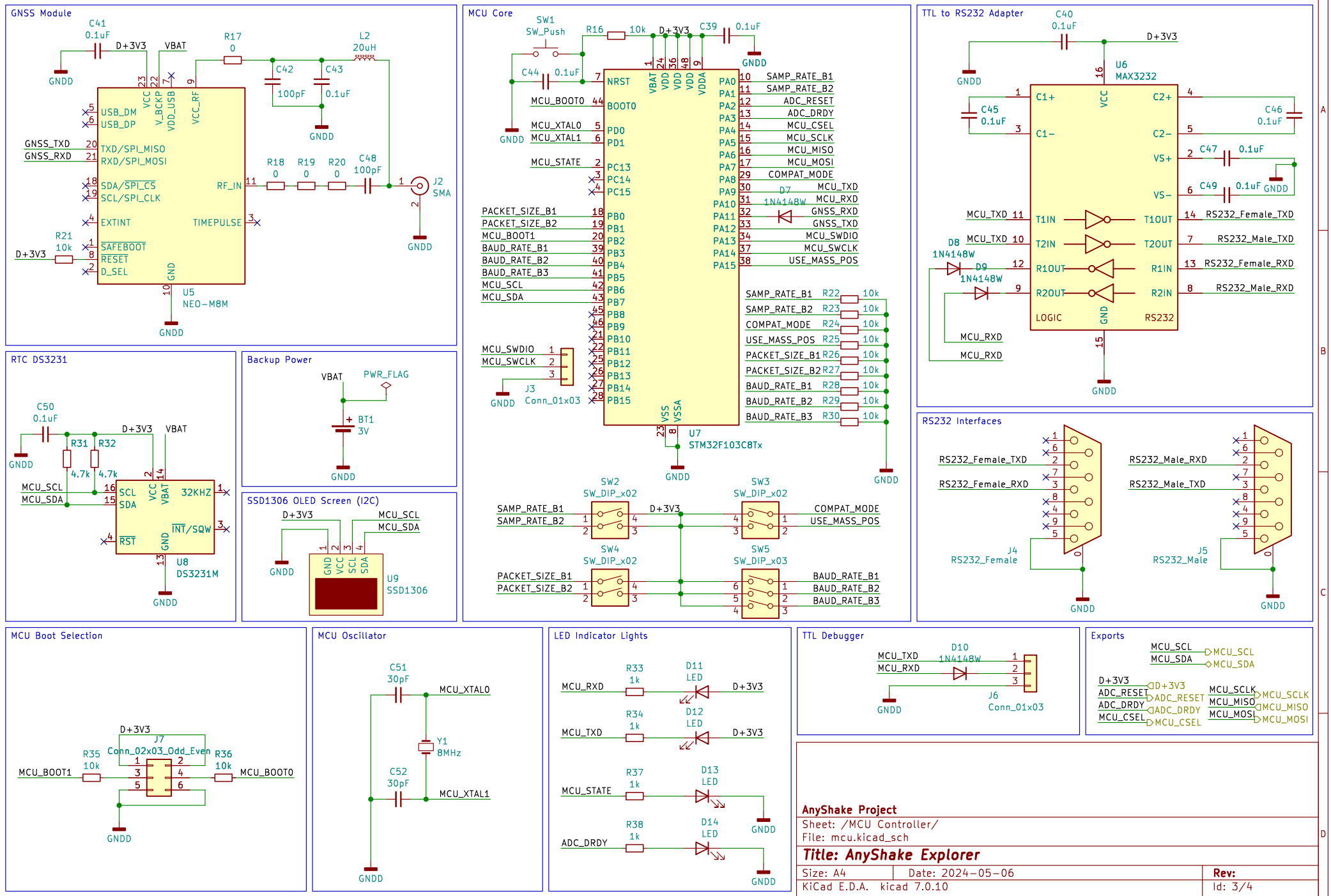
GNSS Module
C41 0.1uF
D+3V3
VBAT
R17 0
L2 20uH
C42 100pF
C43 0.1uF
GNDD
USB_DM
USB_DP
VCC
V_BCKP
VDD_USB
VCC_RF
GNSS_TXD
GNSS_RXD
TXD/SPI_MISO
RXD/SPI_MOSI
SDA/SPI_CS
SCL/SPI_CLK
EXTINT
SAFEBOOT
RESET
D_SEL
GND
RF_IN
TIMEPULSE
R18 0
R19 0
R20 0
C48 100pF
J2 SMA
R21 10k
U5 NEO-M8M
MCU Core
SW1 SW_Push
R16 10k
C39 0.1uF
C44 0.1uF
NRST
BOOT0
MCU_BOOT0
MCU_XTAL0
MCU_XTAL1
MCU_STATE
PACKET_SIZE_B1
PACKET_SIZE_B2
MCU_BOOT1
BAUD_RATE_B1
BAUD_RATE_B2
BAUD_RATE_B3
MCU_SCL
MCU_SDA
MCU_SWDIO
MCU_SWCLK
J3 Conn_01x03
D7 1N4148W
SAMP_RATE_B1
SAMP_RATE_B2
ADC_RESET
ADC_DRDY
MCU_CSEL
MCU_SCLK
MCU_MISO
MCU_MOSI
COMPAT_MODE
MCU_TXD
MCU_RXD
GNSS_RXD
GNSS_TXD
MCU_SWDIO
MCU_SWCLK
USE_MASS_POS
U7 STM32F103C8Tx
SW2 SW_DIP_x02
SW3 SW_DIP_x02
SW4 SW_DIP_x02
SW5 SW_DIP_x03
TTL to RS232 Adapter
C40 0.1uF
U6 MAX3232
C45 0.1uF
C46 0.1uF
C47 0.1uF
C49 0.1uF
C1+
C1-
C2+
C2-
VS+
VS-
T1IN
T2IN
R1OUT
R2OUT
T1OUT
T2OUT
R1IN
R2IN
LOGIC
RS232
RS232_Female_TXD
RS232_Female_RXD
RS232_Male_TXD
RS232_Male_RXD
D8 1N4148W
D9 1N4148W
RS232 Interfaces
J4 RS232_Female
J5 RS232_Male
RTC DS3231
C50 0.1uF
R31 4.7k
R32 4.7k
SCL
SDA
RST
32KHZ
INT/SQW
U8 DS3231M
Backup Power
PWR_FLAG
BT1 3V
SSD1306 OLED Screen (I2C)
U9 SSD1306
MCU Boot Selection
J7 Conn_02x03_Odd_Even
R35 10k
R36 10k
MCU Oscillator
C51 30pF
C52 30pF
Y1 8MHz
LED Indicator Lights
R33 1k
R34 1k
R37 1k
R38 1k
D11 LED
D12 LED
D13 LED
D14 LED
TTL Debugger
D10 1N4148W
J6 Conn_01x03
Exports
AnyShake Project
Sheet: /MCU Controller/
File: mcu.kicad_sch
Title: AnyShake Explorer
Size: A4
Date: 2024-05-06
Rev:
KiCad E.D.A. kicad 7.0.10
Id: 3/4

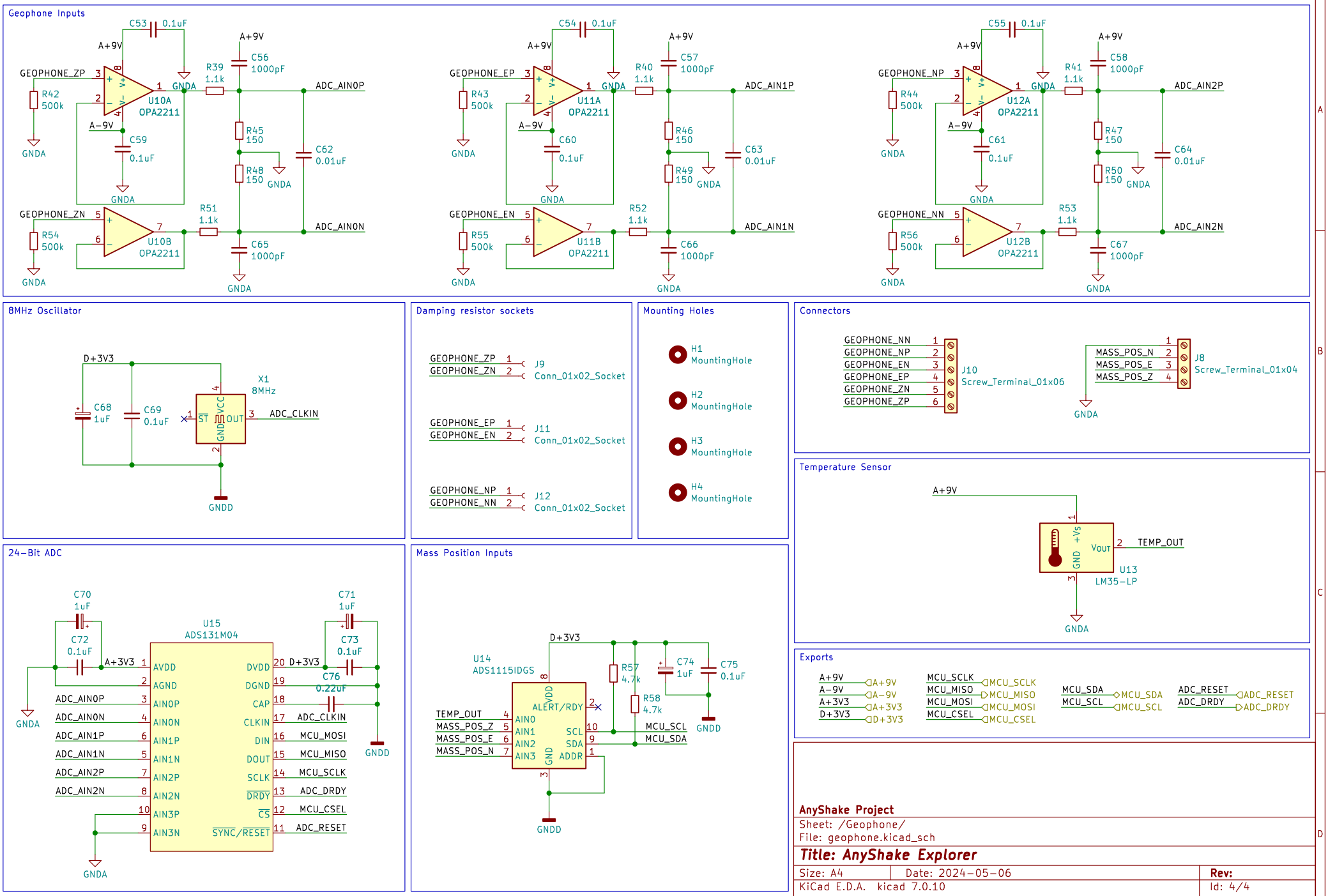
Geophone Inputs
GEOPHONE_ZP
GEOPHONE_ZN
GEOPHONE_EP
GEOPHONE_EN
GEOPHONE_NP
GEOPHONE_NN
U10A OPA2211
U10B OPA2211
U11A OPA2211
U11B OPA2211
U12A OPA2211
U12B OPA2211
ADC_AIN0P
ADC_AIN0N
ADC_AIN1P
ADC_AIN1N
ADC_AIN2P
ADC_AIN2N
A+9V
A−9V
GNDA
8MHz Oscillator
D+3V3
X1 8MHz
ADC_CLKIN
GNDD
Damping resistor sockets
J9 Conn_01x02_Socket
J11 Conn_01x02_Socket
J12 Conn_01x02_Socket
Mounting Holes
H1 MountingHole
H2 MountingHole
H3 MountingHole
H4 MountingHole
Connectors
J10 Screw_Terminal_01x06
J8 Screw_Terminal_01x04
MASS_POS_N
MASS_POS_E
MASS_POS_Z
Temperature Sensor
TEMP_OUT
U13 LM35-LP
24-Bit ADC
U15 ADS131M04
A+3V3
ADC_CLKIN
MCU_MOSI
MCU_MISO
MCU_SCLK
ADC_DRDY
MCU_CSEL
ADC_RESET
Mass Position Inputs
U14 ADS1115IDGS
MCU_SCL
MCU_SDA
Exports
MCU_SDA
MCU_SCL
ADC_RESET
ADC_DRDY
AnyShake Project
Sheet: /Geophone/
File: geophone.kicad_sch
Title: AnyShake Explorer
Size: A4
Date: 2024-05-06
Rev:
KiCad E.D.A. kicad 7.0.10
Id: 4/4