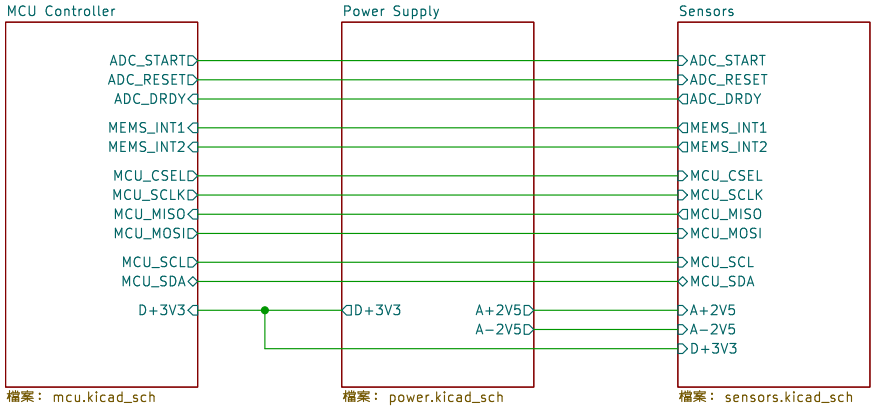

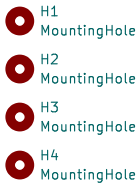

AnyShake Project

Sheet: /
File: Explorer.kicad_sch

Title: AnyShake Explorer

Size: A4	Date: 2024−05−06	**Rev:**
KiCad E.D.A. 8.0.3		Id: 1/4

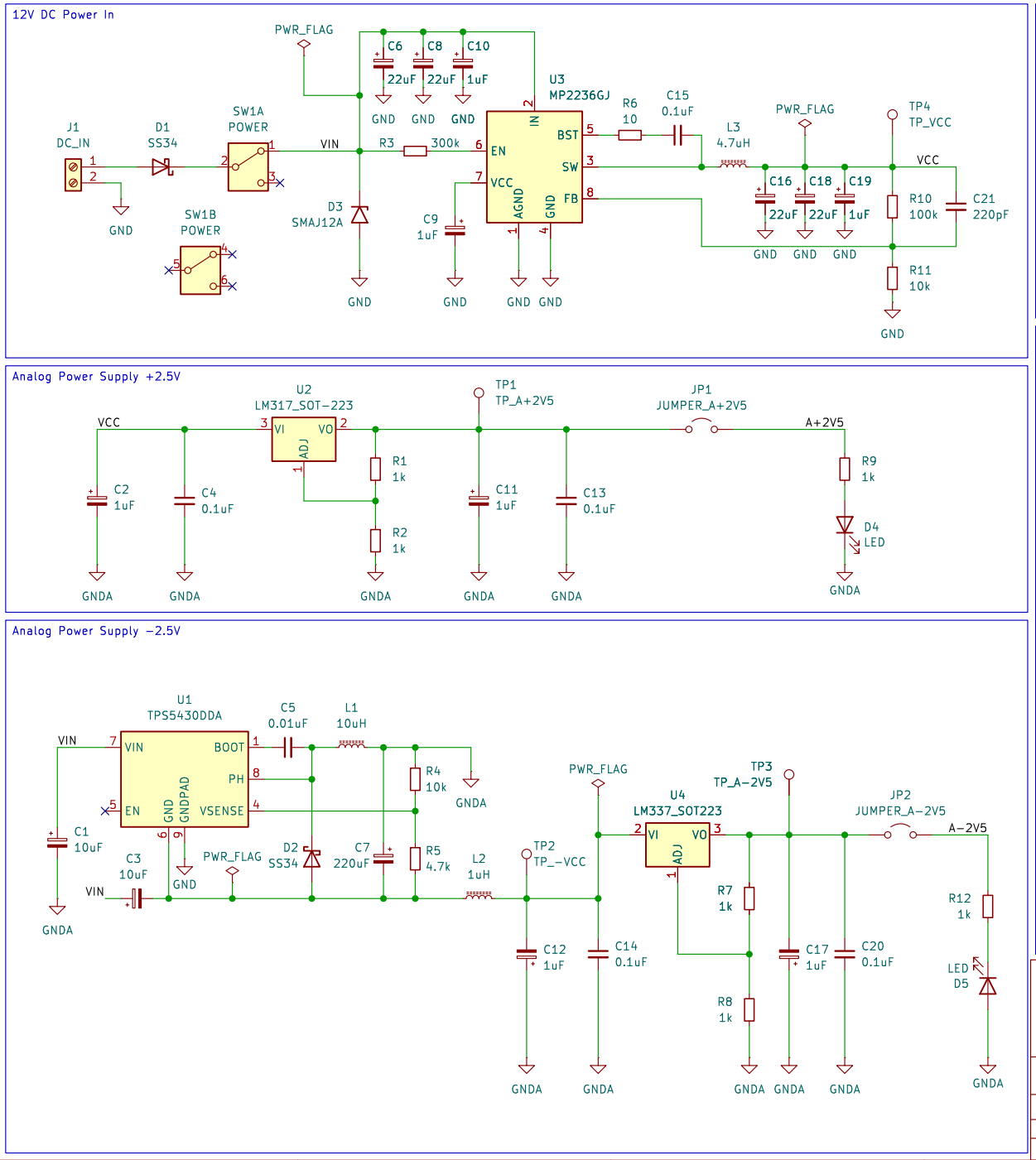

AnyShake Project

Sheet: /Power Supply/

File: power.kicad_sch

Title: AnyShake Explorer

Size: A4	Date: 2024-06-25	Rev:
KiCad E.D.A. 8.0.3		Id: 2/4

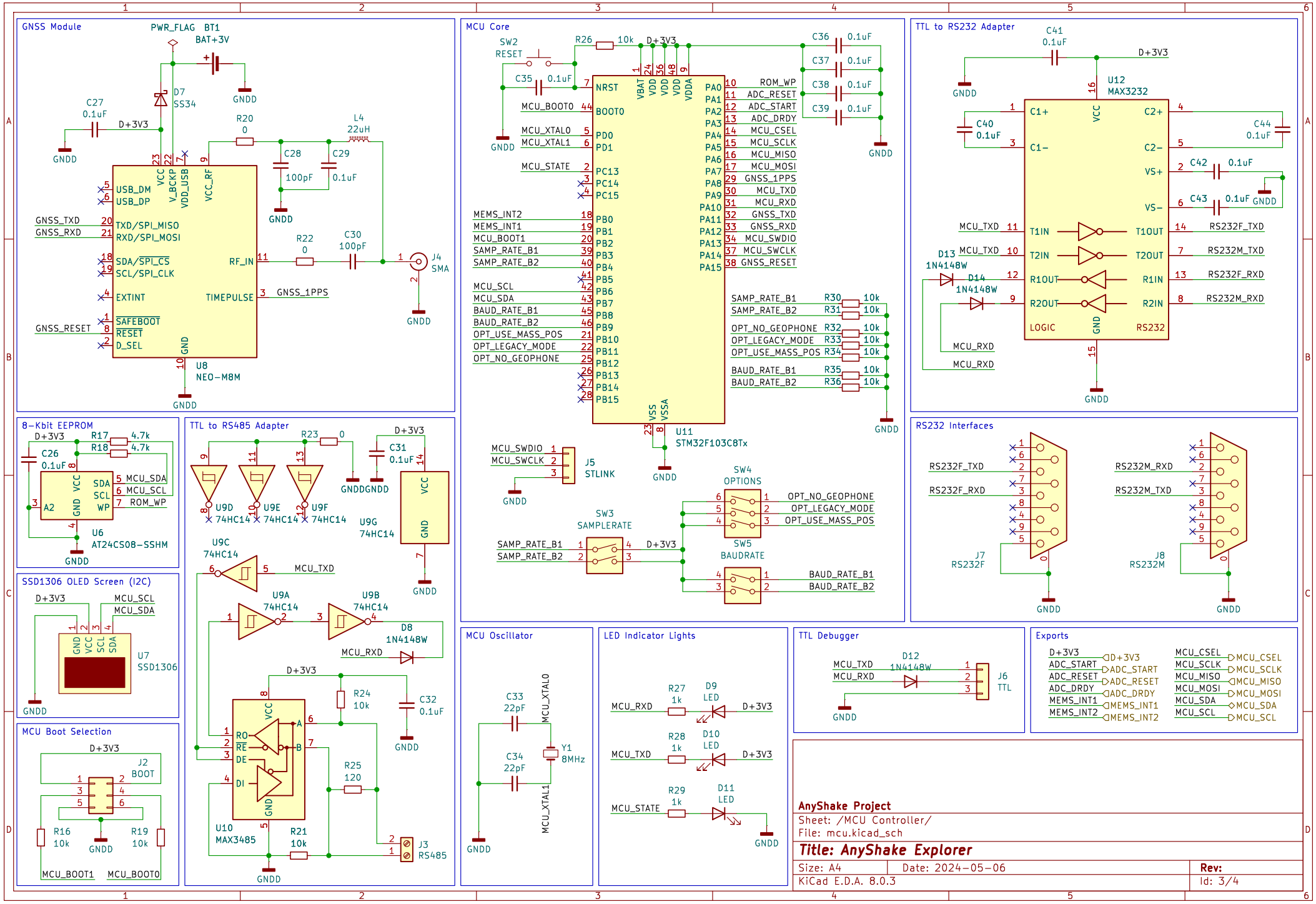
GNSS Module
PWR_FLAG
BT1
BAT+3V
D7
SS34
C27
0.1uF
D+3V3
GNDD
R20
0
L4
22uH
C28
100pF
C29
0.1uF
USB_DM
USB_DP
GNSS_TXD
GNSS_RXD
TXD/SPI_MISO
RXD/SPI_MOSI
SDA/SPI_CS
SCL/SPI_CLK
EXTINT
GNSS_RESET
SAFEBOOT
RESET
D_SEL
VCC
V_BCKP
VDD_USB
VCC_RF
RF_IN
TIMEPULSE
GND
R22
0
C30
100pF
J4
SMA
GNSS_1PPS
U8
NEO-M8M
MCU Core
SW2
RESET
R26
10k
C35
0.1uF
NRST
BOOT0
MCU_BOOT0
MCU_XTAL0
MCU_XTAL1
MCU_STATE
PD0
PD1
PC13
PC14
PC15
MEMS_INT2
MEMS_INT1
MCU_BOOT1
SAMP_RATE_B1
SAMP_RATE_B2
MCU_SCL
MCU_SDA
BAUD_RATE_B1
BAUD_RATE_B2
OPT_USE_MASS_POS
OPT_LEGACY_MODE
OPT_NO_GEOPHONE
PB0
PB1
PB2
PB3
PB4
PB5
PB6
PB7
PB8
PB9
PB10
PB11
PB12
PB13
PB14
PB15
VBAT
VDD
VDDA
VSS
VSSA
PA0
PA1
PA2
PA3
PA4
PA5
PA6
PA7
PA8
PA9
PA10
PA11
PA12
PA13
PA14
PA15
ROM_WP
ADC_RESET
ADC_START
ADC_DRDY
MCU_CSEL
MCU_SCLK
MCU_MISO
MCU_MOSI
GNSS_1PPS
MCU_TXD
MCU_RXD
GNSS_TXD
GNSS_RXD
MCU_SWDIO
MCU_SWCLK
MCU_SWCLK
MCU_SWDIO
GNSS_RESET
C36
C37
C38
C39
0.1uF
R30
R31
R32
R33
R34
R35
R36
10k
U11
STM32F103C8Tx
J5
STLINK
SW4
OPTIONS
OPT_NO_GEOPHONE
OPT_LEGACY_MODE
OPT_USE_MASS_POS
SW3
SAMPLERATE
SW5
BAUDRATE
BAUD_RATE_B1
BAUD_RATE_B2
TTL to RS232 Adapter
C41
0.1uF
U12
MAX3232
C1+
C1-
C2+
C2-
VS+
VS-
C40
C44
C42
C43
T1IN
T2IN
R1OUT
R2OUT
T1OUT
T2OUT
R1IN
R2IN
LOGIC
RS232
RS232F_TXD
RS232F_RXD
RS232M_TXD
RS232M_RXD
D13
1N4148W
D14
1N4148W
8-Kbit EEPROM
R17
4.7k
R18
4.7k
C26
0.1uF
SDA
SCL
WP
A2
U6
AT24CS08-SSHM
TTL to RS485 Adapter
R23
0
C31
0.1uF
U9D
U9E
U9F
U9G
74HC14
U9C
U9A
U9B
D8
1N4148W
R24
10k
C32
0.1uF
R25
120
R21
10k
RO
RE
DE
DI
A
B
U10
MAX3485
J3
RS485
RS232 Interfaces
J7
RS232F
J8
RS232M
SSD1306 OLED Screen (I2C)
U7
SSD1306
MCU Boot Selection
J2
BOOT
R16
10k
R19
10k
MCU_BOOT1
MCU_BOOT0
MCU Oscillator
C33
22pF
C34
22pF
Y1
8MHz
LED Indicator Lights
R27
1k
R28
1k
R29
1k
D9
LED
D10
LED
D11
LED
TTL Debugger
D12
1N4148W
J6
TTL
Exports
D+3V3
ADC_START
ADC_RESET
ADC_DRDY
MEMS_INT1
MEMS_INT2
MCU_CSEL
MCU_SCLK
MCU_MISO
MCU_MOSI
MCU_SDA
MCU_SCL
AnyShake Project
Sheet: /MCU Controller/
File: mcu.kicad_sch
Title: AnyShake Explorer
Size: A4
Date: 2024-05-06
Rev:
KiCad E.D.A. 8.0.3
Id: 3/4

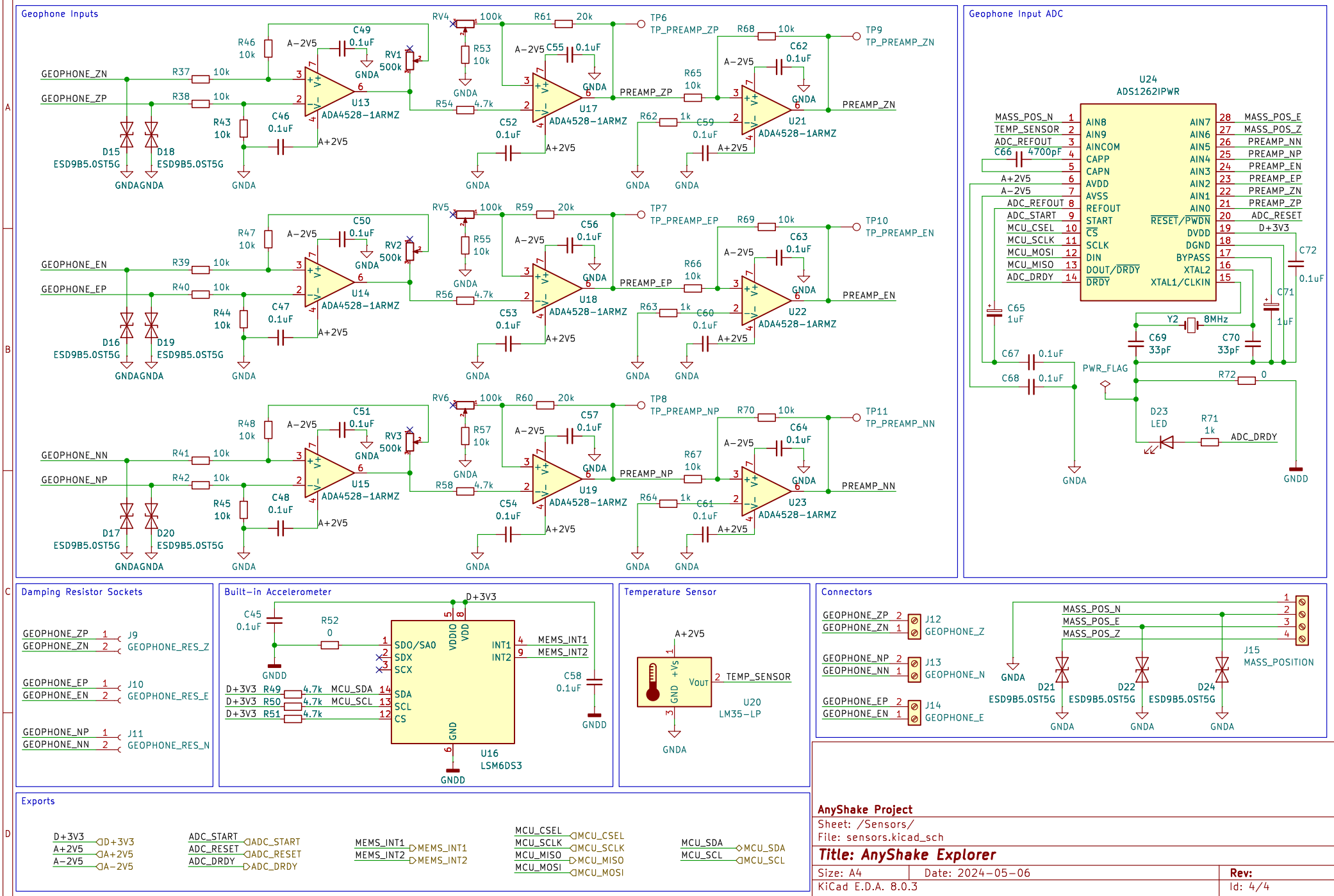
Geophone Inputs
GEOPHONE_ZN
GEOPHONE_ZP
GEOPHONE_EN
GEOPHONE_EP
GEOPHONE_NN
GEOPHONE_NP
R37 10k
R38 10k
R39 10k
R40 10k
R41 10k
R42 10k
R46 10k
R47 10k
R48 10k
R43 10k
R44 10k
R45 10k
D15 ESD9B5.0ST5G
D18 ESD9B5.0ST5G
D16 ESD9B5.0ST5G
D19 ESD9B5.0ST5G
D17 ESD9B5.0ST5G
D20 ESD9B5.0ST5G
GNDA
A-2V5
A+2V5
C49 0.1uF
C50 0.1uF
C51 0.1uF
C46 0.1uF
C47 0.1uF
C48 0.1uF
RV1 500k
RV2 500k
RV3 500k
U13 ADA4528-1ARMZ
U14 ADA4528-1ARMZ
U15 ADA4528-1ARMZ
RV4 100k
RV5 100k
RV6 100k
R53 10k
R55 10k
R57 10k
R54 4.7k
R56 4.7k
R58 4.7k
R61 20k
R59 20k
R60 20k
C55 0.1uF
C56 0.1uF
C57 0.1uF
C52 0.1uF
C53 0.1uF
C54 0.1uF
U17 ADA4528-1ARMZ
U18 ADA4528-1ARMZ
U19 ADA4528-1ARMZ
TP6 TP_PREAMP_ZP
TP7 TP_PREAMP_EP
TP8 TP_PREAMP_NP
PREAMP_ZP
PREAMP_EP
PREAMP_NP
R65 10k
R66 10k
R67 10k
R62 1k
R63 1k
R64 1k
C59 0.1uF
C60 0.1uF
C61 0.1uF
R68 10k
R69 10k
R70 10k
C62 0.1uF
C63 0.1uF
C64 0.1uF
U21 ADA4528-1ARMZ
U22 ADA4528-1ARMZ
U23 ADA4528-1ARMZ
TP9 TP_PREAMP_ZN
TP10 TP_PREAMP_EN
TP11 TP_PREAMP_NN
PREAMP_ZN
PREAMP_EN
PREAMP_NN
Geophone Input ADC
U24 ADS1262IPWR
MASS_POS_N
TEMP_SENSOR
ADC_REFOUT
C66 4700pF
A+2V5
A-2V5
ADC_REFOUT
ADC_START
MCU_CSEL
MCU_SCLK
MCU_MOSI
MCU_MISO
ADC_DRDY
AIN8
AIN9
AINCOM
CAPP
CAPN
AVDD
AVSS
REFOUT
START
CS
SCLK
DIN
DOUT/DRDY
DRDY
AIN7
AIN6
AIN5
AIN4
AIN3
AIN2
AIN1
AIN0
RESET/PWDN
DVDD
DGND
BYPASS
XTAL2
XTAL1/CLKIN
MASS_POS_E
MASS_POS_Z
PREAMP_NN
PREAMP_NP
PREAMP_EN
PREAMP_EP
PREAMP_ZN
PREAMP_ZP
ADC_RESET
D+3V3
C72 0.1uF
C71 1uF
C65 1uF
Y2 8MHz
C69 33pF
C70 33pF
C67 0.1uF
C68 0.1uF
PWR_FLAG
R72 0
D23 LED
R71 1k
ADC_DRDY
GNDD
Damping Resistor Sockets
GEOPHONE_ZP
GEOPHONE_ZN
J9 GEOPHONE_RES_Z
GEOPHONE_EP
GEOPHONE_EN
J10 GEOPHONE_RES_E
GEOPHONE_NP
GEOPHONE_NN
J11 GEOPHONE_RES_N
Built-in Accelerometer
D+3V3
C45 0.1uF
R52 0
GNDD
SDO/SA0
SDX
SCX
SDA
SCL
CS
VDDIO
VDD
GND
INT1
INT2
MEMS_INT1
MEMS_INT2
D+3V3 R49 4.7k MCU_SDA
D+3V3 R50 4.7k MCU_SCL
D+3V3 R51 4.7k
C58 0.1uF
U16 LSM6DS3
Temperature Sensor
A+2V5
+Vs
GND
VOUT
TEMP_SENSOR
U20 LM35-LP
GNDA
Connectors
GEOPHONE_ZP
GEOPHONE_ZN
J12 GEOPHONE_Z
GEOPHONE_NP
GEOPHONE_NN
J13 GEOPHONE_N
GEOPHONE_EP
GEOPHONE_EN
J14 GEOPHONE_E
MASS_POS_N
MASS_POS_E
MASS_POS_Z
J15 MASS_POSITION
D21 ESD9B5.0ST5G
D22 ESD9B5.0ST5G
D24 ESD9B5.0ST5G
Exports
D+3V3 D+3V3
A+2V5 A+2V5
A-2V5 A-2V5
ADC_START ADC_START
ADC_RESET ADC_RESET
ADC_DRDY ADC_DRDY
MEMS_INT1 MEMS_INT1
MEMS_INT2 MEMS_INT2
MCU_CSEL MCU_CSEL
MCU_SCLK MCU_SCLK
MCU_MISO MCU_MISO
MCU_MOSI MCU_MOSI
MCU_SDA MCU_SDA
MCU_SCL MCU_SCL
AnyShake Project
Sheet: /Sensors/
File: sensors.kicad_sch
Title: AnyShake Explorer
Size: A4
Date: 2024-05-06
Rev:
KiCad E.D.A. 8.0.3
Id: 4/4