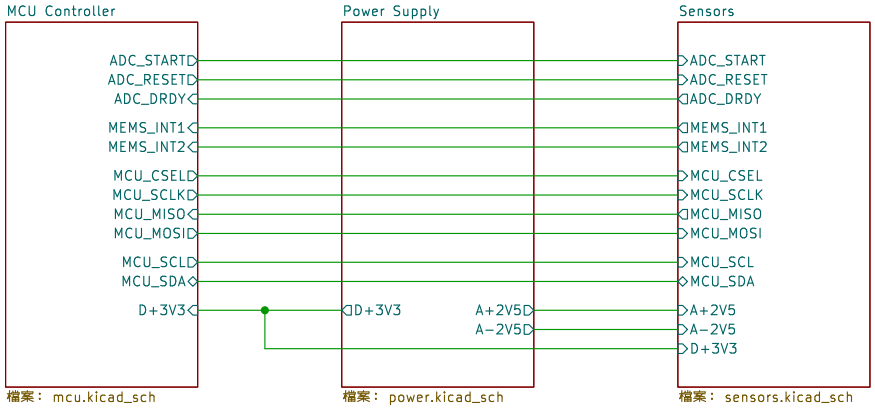

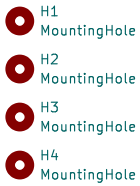

AnyShake Project

Sheet: /
File: Explorer.kicad_sch

Title: AnyShake Explorer

Size: A4	Date: 2024−05−06	**Rev:**
KiCad E.D.A. 8.0.3		Id: 1/4

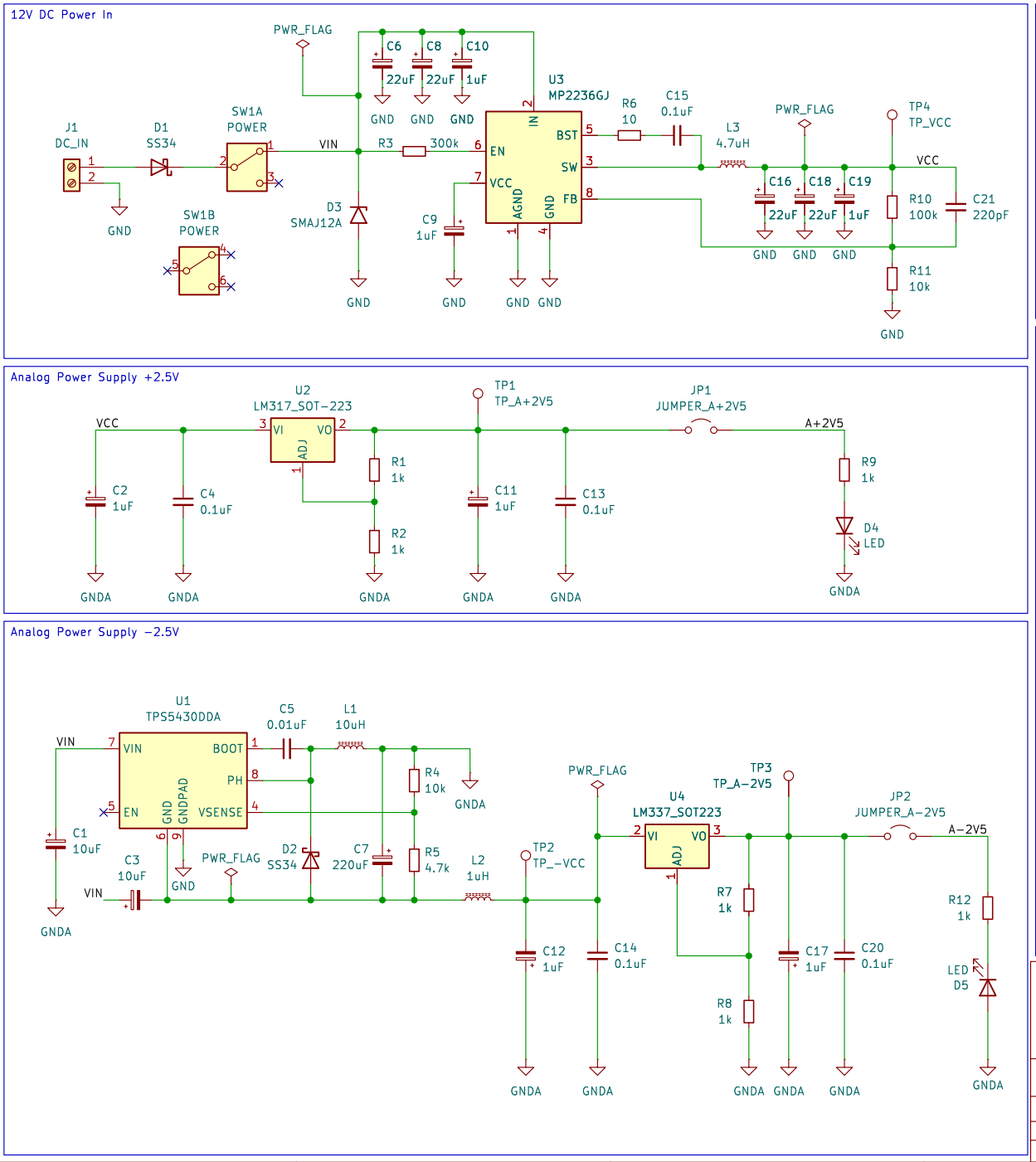

AnyShake Project

Sheet: /Power Supply/

File: power.kicad_sch

Title: AnyShake Explorer

Size: A4	Date: 2024-06-25	**Rev:**
KiCad E.D.A. 8.0.3		Id: 2/4

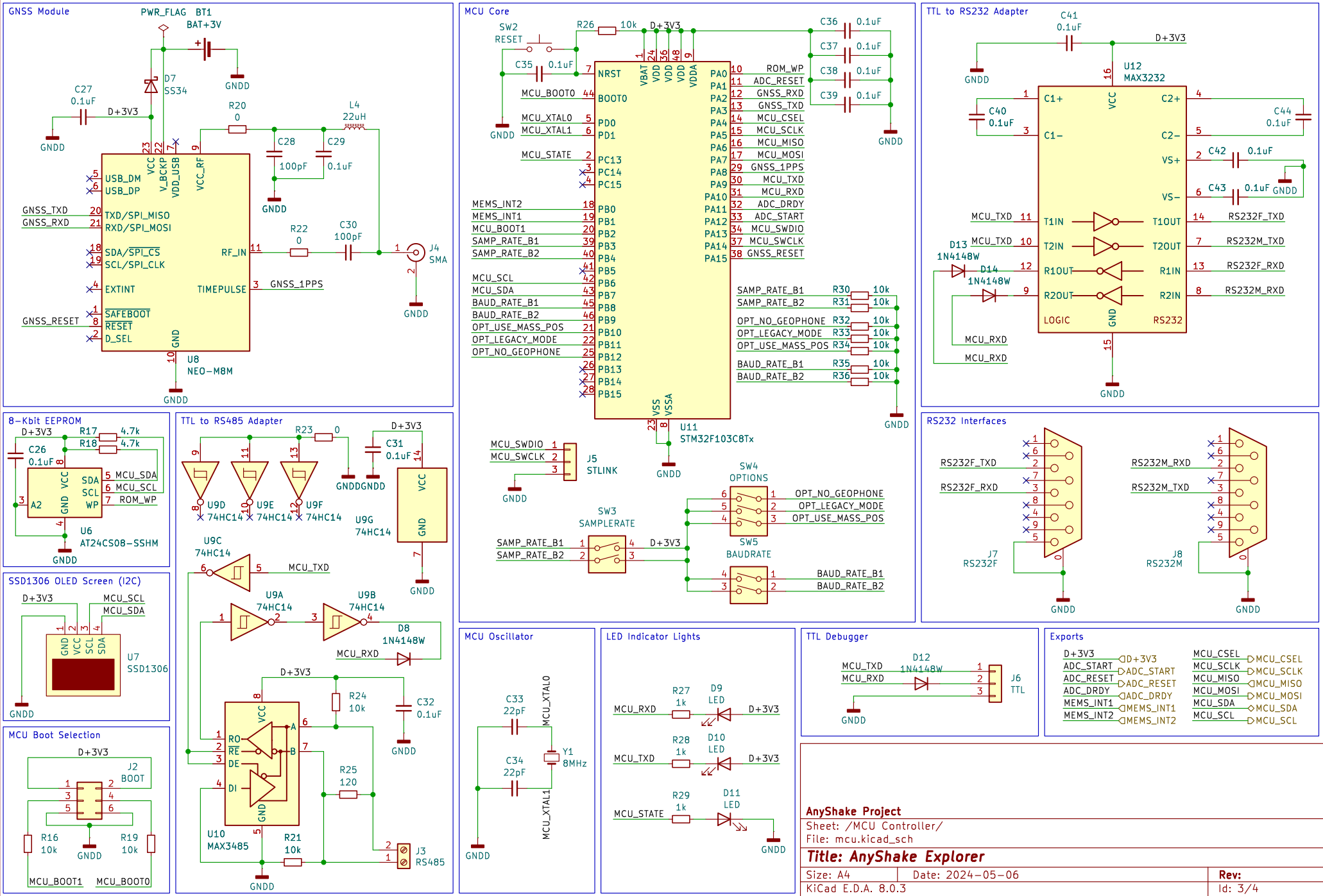
GNSS Module
PWR_FLAG
BT1
BAT+3V
D7
SS34
C27
0.1uF
D+3V3
GNDD
R20
0
L4
22uH
C28
100pF
C29
0.1uF
USB_DM
USB_DP
GNSS_TXD
GNSS_RXD
TXD/SPI_MISO
RXD/SPI_MOSI
SDA/SPI_CS
SCL/SPI_CLK
EXTINT
GNSS_RESET
SAFEBOOT
RESET
D_SEL
VCC
V_BCKP
VDD_USB
VCC_RF
RF_IN
TIMEPULSE
GND
R22
0
C30
100pF
J4
SMA
GNSS_1PPS
U8
NEO-M8M
MCU Core
SW2
RESET
R26
10k
C35
0.1uF
NRST
BOOT0
MCU_BOOT0
MCU_XTAL0
MCU_XTAL1
MCU_STATE
PD0
PD1
PC13
PC14
PC15
MEMS_INT2
MEMS_INT1
MCU_BOOT1
SAMP_RATE_B1
SAMP_RATE_B2
MCU_SCL
MCU_SDA
BAUD_RATE_B1
BAUD_RATE_B2
OPT_USE_MASS_POS
OPT_LEGACY_MODE
OPT_NO_GEOPHONE
PB0
PB1
PB2
PB3
PB4
PB5
PB6
PB7
PB8
PB9
PB10
PB11
PB12
PB13
PB14
PB15
VBAT
VDD
VDDA
VSS
VSSA
PA0
PA1
PA2
PA3
PA4
PA5
PA6
PA7
PA8
PA9
PA10
PA11
PA12
PA13
PA14
PA15
ROM_WP
ADC_RESET
GNSS_RXD
GNSS_TXD
MCU_CSEL
MCU_SCLK
MCU_MISO
MCU_MOSI
GNSS_1PPS
MCU_TXD
MCU_RXD
ADC_DRDY
ADC_START
MCU_SWDIO
MCU_SWCLK
GNSS_RESET
C36
C37
C38
C39
0.1uF
R30
R31
R32
R33
R34
R35
R36
10k
U11
STM32F103C8Tx
J5
STLINK
SW4
OPTIONS
OPT_NO_GEOPHONE
OPT_LEGACY_MODE
OPT_USE_MASS_POS
SW3
SAMPLERATE
SW5
BAUDRATE
BAUD_RATE_B1
BAUD_RATE_B2
TTL to RS232 Adapter
C41
0.1uF
U12
MAX3232
C1+
C1-
C2+
C2-
VS+
VS-
C40
C44
C42
C43
T1IN
T2IN
R1OUT
R2OUT
T1OUT
T2OUT
R1IN
R2IN
LOGIC
RS232
RS232F_TXD
RS232M_TXD
RS232F_RXD
RS232M_RXD
D13
1N4148W
D14
1N4148W
8-Kbit EEPROM
R17
4.7k
R18
4.7k
C26
0.1uF
SDA
SCL
WP
A2
U6
AT24CS08-SSHM
TTL to RS485 Adapter
R23
0
C31
0.1uF
U9D
U9E
U9F
U9G
74HC14
U9C
U9A
U9B
D8
1N4148W
R24
10k
C32
0.1uF
R25
120
R21
10k
U10
MAX3485
RO
RE
DE
DI
A
B
J3
RS485
RS232 Interfaces
J7
RS232F
J8
RS232M
SSD1306 OLED Screen (I2C)
U7
SSD1306
MCU Boot Selection
J2
BOOT
R16
10k
R19
10k
MCU_BOOT1
MCU_BOOT0
MCU Oscillator
C33
22pF
C34
22pF
Y1
8MHz
LED Indicator Lights
R27
1k
R28
1k
R29
1k
D9
LED
D10
LED
D11
LED
TTL Debugger
D12
1N4148W
J6
TTL
Exports
D+3V3
ADC_START
ADC_RESET
ADC_DRDY
MEMS_INT1
MEMS_INT2
MCU_CSEL
MCU_SCLK
MCU_MISO
MCU_MOSI
MCU_SDA
MCU_SCL
AnyShake Project
Sheet: /MCU Controller/
File: mcu.kicad_sch
Title: AnyShake Explorer
Size: A4
Date: 2024-05-06
Rev:
KiCad E.D.A. 8.0.3
Id: 3/4

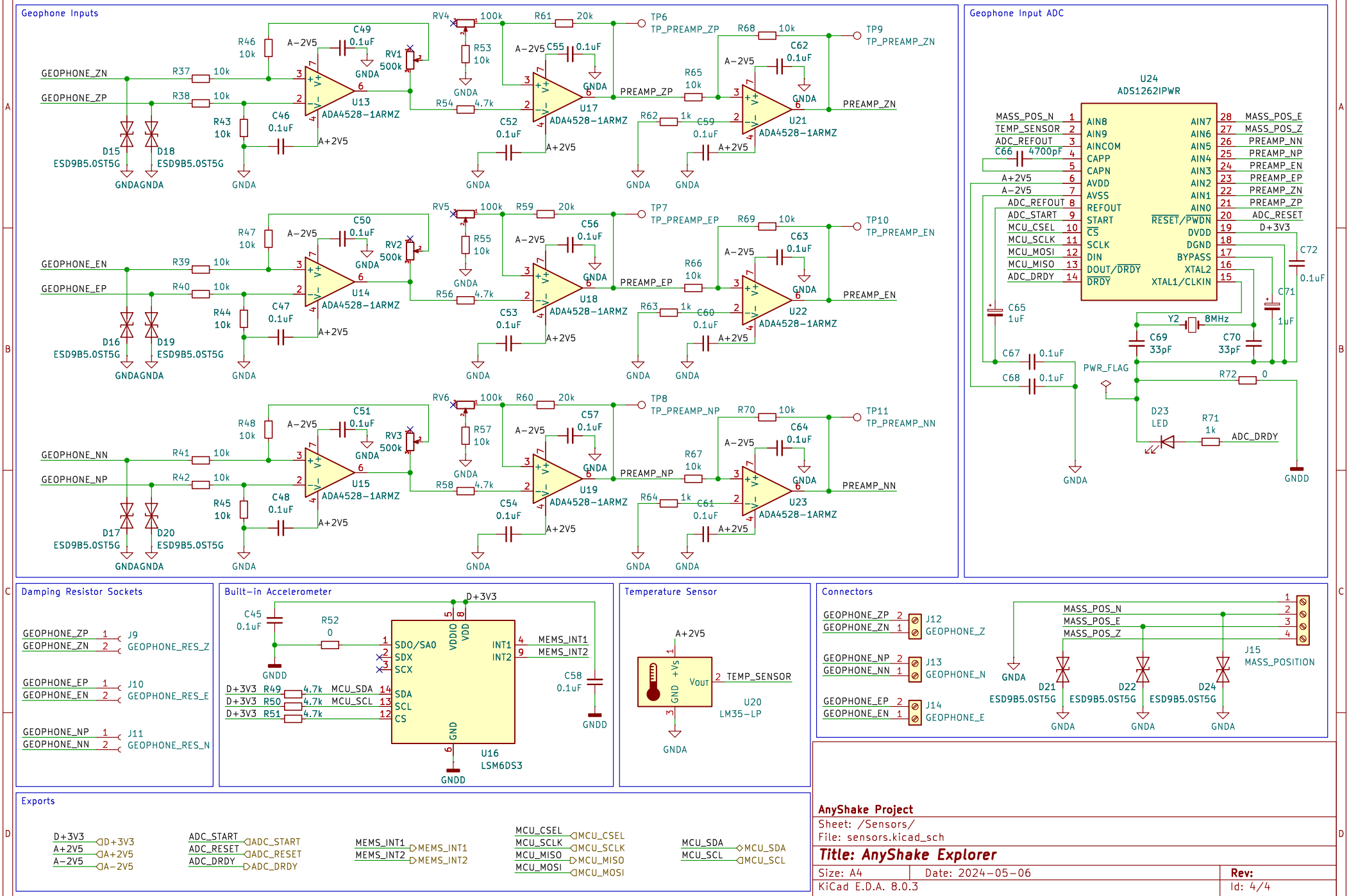

AnyShake Project

Sheet: /Sensors/

File: sensors.kicad_sch

Title: AnyShake Explorer

Size: A4	Date: 2024-05-06	Rev:
KiCad E.D.A. 8.0.3		Id: 4/4