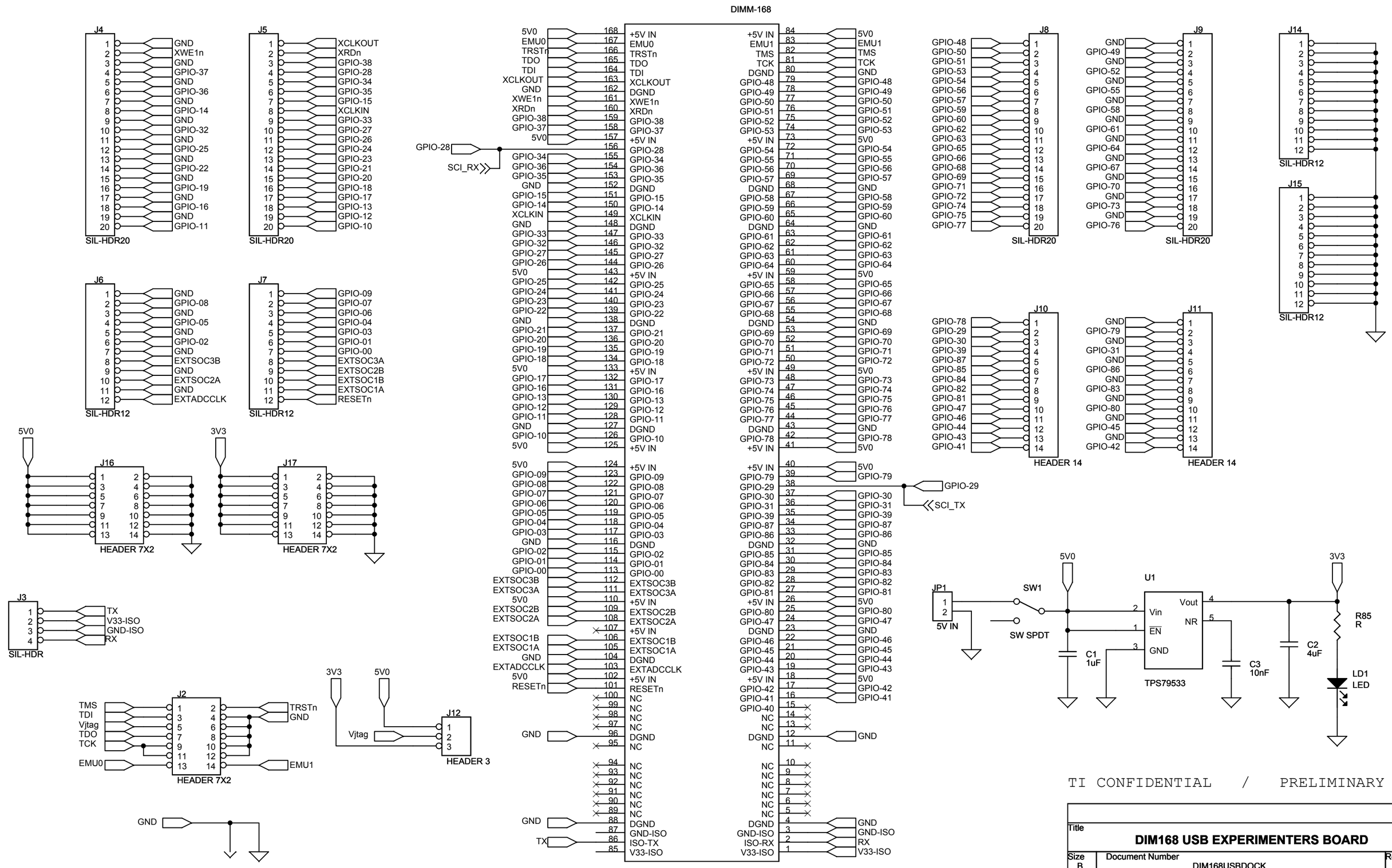
DIMM-168
J4
SIL-HDR20
J5
SIL-HDR20
J6
SIL-HDR12
J7
SIL-HDR12
J8
SIL-HDR20
J9
SIL-HDR20
J14
SIL-HDR12
J15
SIL-HDR12
J10
HEADER 14
J11
HEADER 14
J16
HEADER 7X2
J17
HEADER 7X2
J3
SIL-HDR
J2
HEADER 7X2
J12
HEADER 3
J1
JP1
5V IN
SW1
SW SPDT
U1
TPS79533
C1
1uF
C3
10nF
C2
4uF
R85
R
LD1
LED
GPIO-28
SCI_RX
GPIO-29
SCI_TX
TI CONFIDENTIAL / PRELIMINARY
Title
DIM168 USB EXPERIMENTERS BOARD
Size
B
Document Number
DIM168USBDOCK
Rev
0.2
Date: Wednesday, March 30, 2011
Sheet 1 of 1

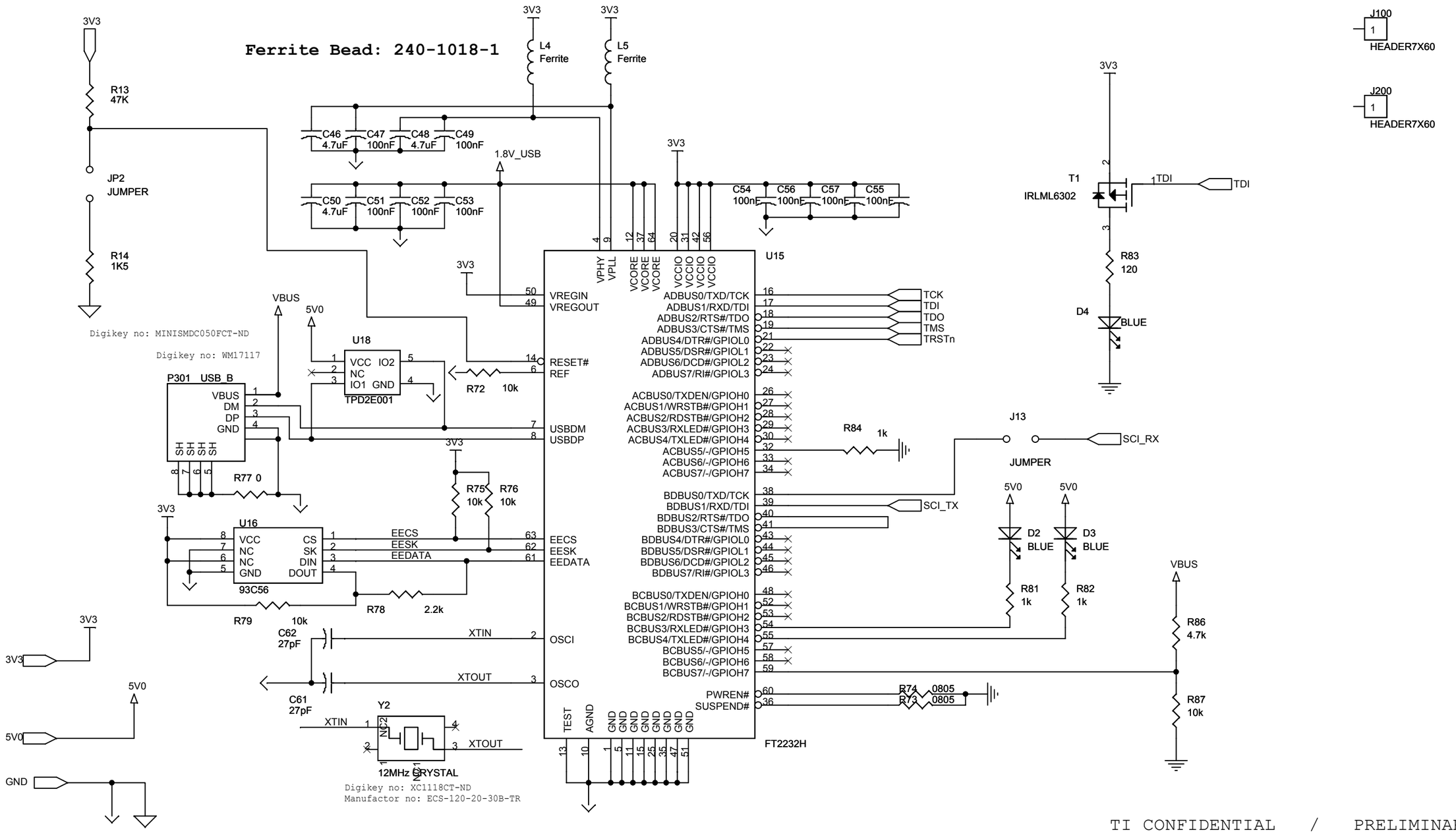


TI CONFIDENTIAL / PRELIMINARY

| | | |
|---|---|---|
| Title | DIM168 USB EXPERIMENTERS BOARD | |
| Size B | Document Number DIM168USBDOCK | Rev 0.2 |
| Date: Wednesday, March 30, 2011 | Sheet 3 of 4 | |