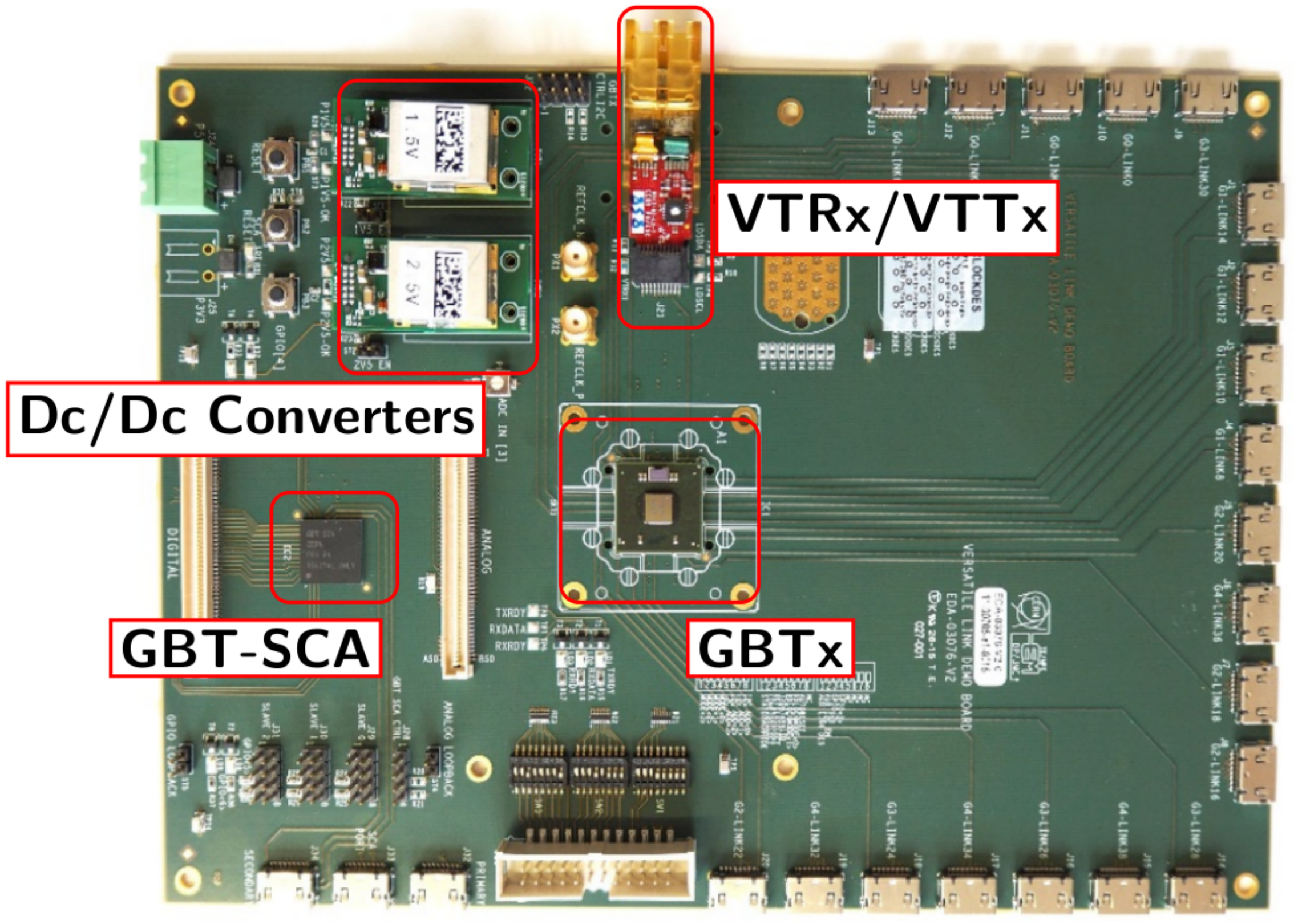
VTRx/VTTx
Dc/Dc Converters
GBT-SCA
GBTx