STEAM CONDENSER TURBINE BYPASS

The operating conditions of the unit may require that the turbine must stop quickly without normal shutdown procedure of the machine, which will send the steam flow produced by steam generator directly to the condenser.

This mode of operation is enabled by installing a control element to reduce the steam pressure and temperature within the condenser.

This equipment is installed, usually in the neck of the condenser and its type and design will depend on the conditions of steam that is sent to it. Can generally carry a water spray system from well condensate to steam tempering once reduced pressure. This spray system can be located externally to the equipment or, in very specific cases, internally the same, depending on the design.

We must distinguish three main types of design depending on steam conditions to be treated.

In the case that the steam pressure conditions of the condenser is less than or equal to 3 bar collector installed whose final end carries a suitably perforated hemispherical cap to serve as reducing the steam pressure.

If the conditions of the steam pressure range from > 3 to < 21 bar and a temperature not exceeding 300 ° C will be used one or more collectors installed along the free space of the condenser neck. This collector will be perforated in a specific area in number and diameter of holes to give the pressure drop which allow steam to be condensed in the condenser nest. Externally to this collector pipes spraying water were placed reducing steam temperature.

Finally a third system is possible in the event that excess steam conditions earlier, particularly if the temperature thereof would be exceeded. In that case the system comprises two collectors jacketed with a system that combines the above two cases.

For the thermodynamic design of these systems the software Steam Condenser Turbine Bypass that from steam conditions chooses which of the three systems must be used and calculated its characteristics.

In the case # 1 and # 3 steam flow shall not exceed 100 Kg/s per collector.

In the case # 2 the maximum flow per collector will be 250 Kg/s.

In all three cases, to determine the diameter of the collector a velocity between 90 and 120 m/s determined by the software according to the specified formulae.

The diameter of the holes for pressure reduction will always be of 10 mm for cases # 1 and # 3. For case # 2, the hole diameter is defined by the software depending on the diameter of the collector.

In any case the holes are always between 10 and 20 mm.

The steam passage section corresponding to the area drilled is calculated as well as the required number of holes from a hole diameter section.

This number of holes must be arranged according to the chosen case, the case # 1 arranged over the hemispherical end, for # 2 distributed along the collector in two sections in rows of holes located diametrically opposite and at positions 90 ° and 270 ° of the circumference of the collector.

In case # 3 the software calculates the flow of water necessary to recalculate the diameter of the second collector where this water is injected. For this calculation, it must be necessary in all three cases, the water flow rate based on a thermal balance to temper the steam to a temperature of about 120 ° C with condensed water of about 45 ° C.

This flow obtained over the initial steam flow will be the new steam will determine the diameter of the second collector of the system. The amount of holes to install on this second collector is recalculated with the new steam flow, at pressure of 3 bara and with a specific drilling coefficient. The resulting holes are distributed in the hemispherical end of the second collector.

After obtaining the diameter of the second collector that is compared to that obtained with the result of adding the necessary distance between the periphery of the first collector and the second order to evacuate the total amount of steam by the resulting ring (initial steam over that produced by tempering water) with a suitable velocity.

Note that in the peripheral zone of the interior of the second collector shall be installed a thermal shirt of suitable material capable of withstanding thermal shock.

For obtaining the allowable distance of ring the software uses a specific formula.

The computer software provides, among others, data collector diameter, diameter and distribution of these holes, the cooling water flow, approximate dimensions and weights of the various cases.

SOFTWARE WINDOWS

DATA ENTRY WINDOW FOR COLLECTOR TYPE

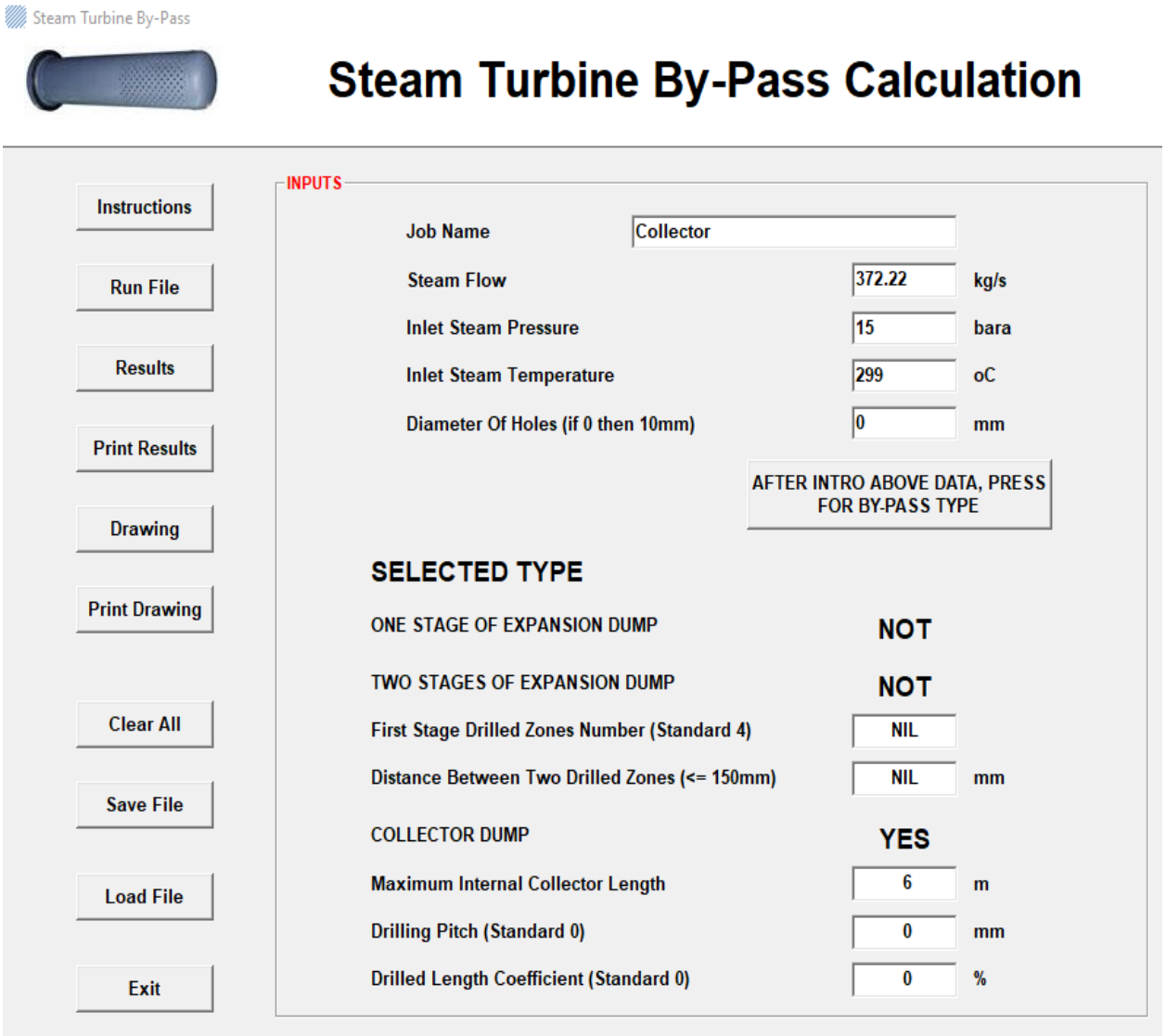

COLLECTOR TYPE RESULTS

COLLECTOR TYPE - Data Results

Job Name : Collector

Data

Steam Flow At Inlet	372,22	kg/s
Steam Enthalpy At Inlet	3036,69	kj/kg
Steam Temperature At Inlet	299	oC
Steam Pressure At Inlet	15	bara
Steam Specific Volume At Inlet	0,1693	m3/kg
Steam Satur.Temper. At Inlet Pressure	198,28	oC
Holes Diameter	13	mm

Results

Number Of Collectors	2	
Steam Flow Per Collector	186,11	kg/s
Calculated Collector Inlet Diameter	584	mm
Adopted Collector Inlet Diameter	650	mm
Collector Thickness	16	mm
Collector Inlet Velocity	105	m/s
Holes Diameter	13	mm
Number Of Drilled Lines	6	
Drilled Length Coefficient Less Than	75	%
Desuperheat. Water Flow Per Collector	35	kg/s
Holes Number Per Collector	857	
Drilling Pitch	26	mm
Final Collector Length	5,95	m
Collectors Weight	3110	kg
Collectors Supports Weight	990	kg
Desuperheating Water System Weight	290	kg
Total Gross Weight	4600	kg

COLLECTOR TYPE DRAWING

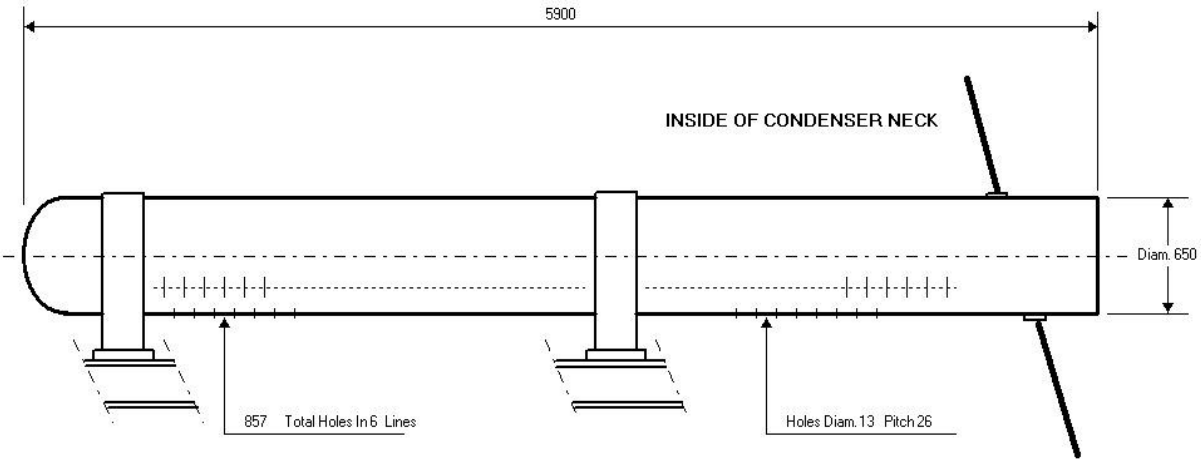

Dimensions in millimeters

Number of Collectors 2

OTHERS CASES DRAWINGS

ONE STAGE TYPE

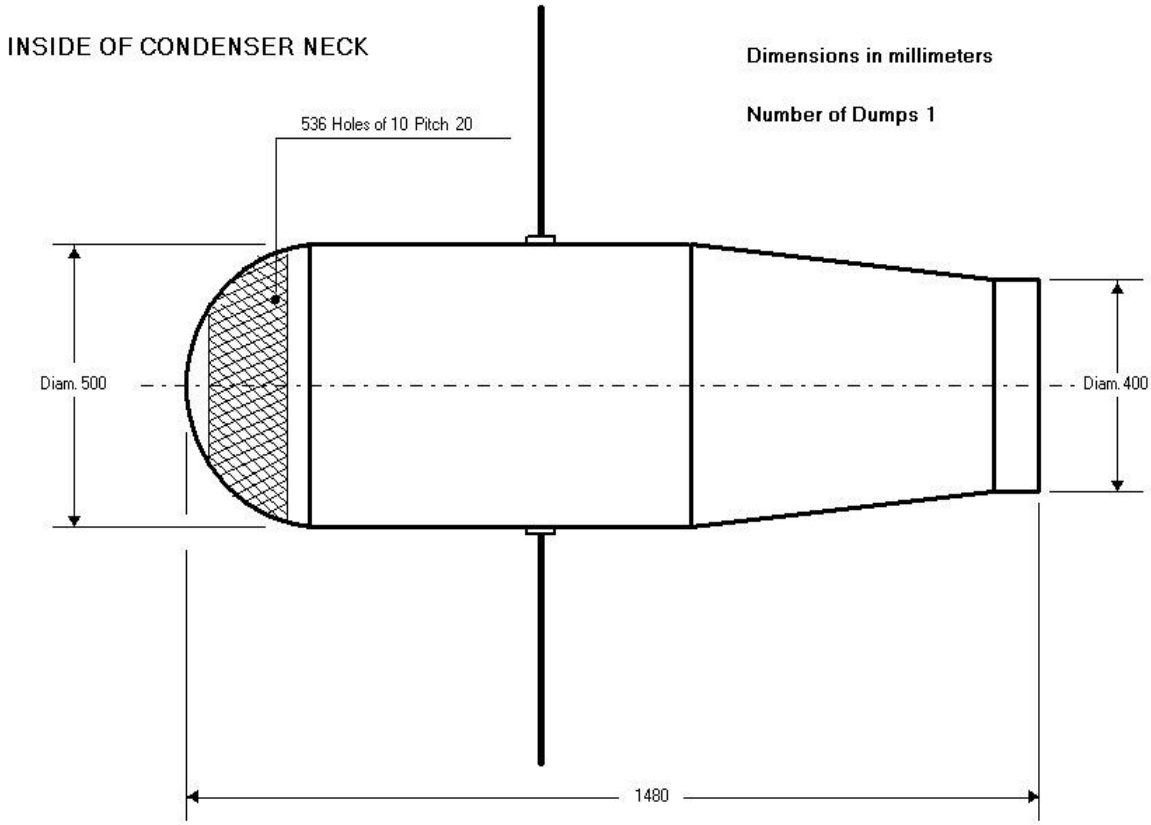

TWO STAGE TYPE

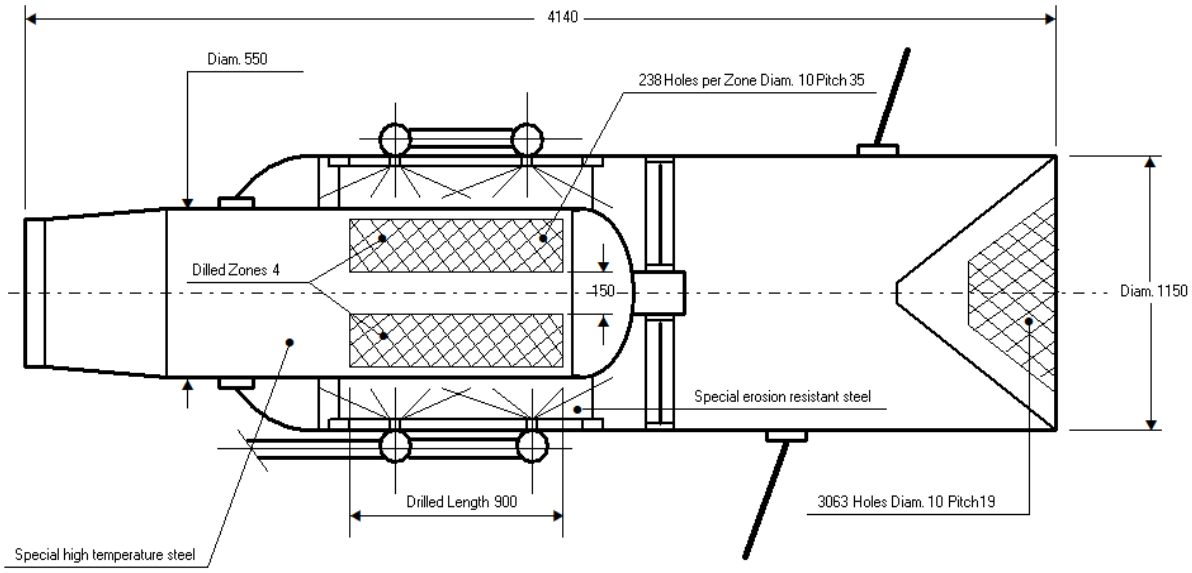

INSIDE OF CONDENSER NECK

Dimensions in millimeters

Number of Systems 1