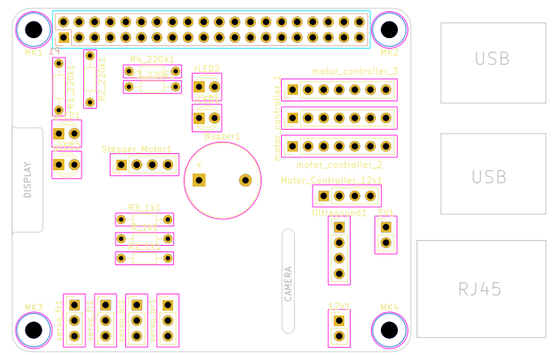

RASPBERRY-PI 40-PIN ADDON BOARD
VIEW FROM TOP
NOTE: P1 SHOULD BE FITTED ON THE REVERSE OF THE BOARD

ADD EDGE CUTS FROM CAMERA AND DISPLAY PORTS AS REQUIRED