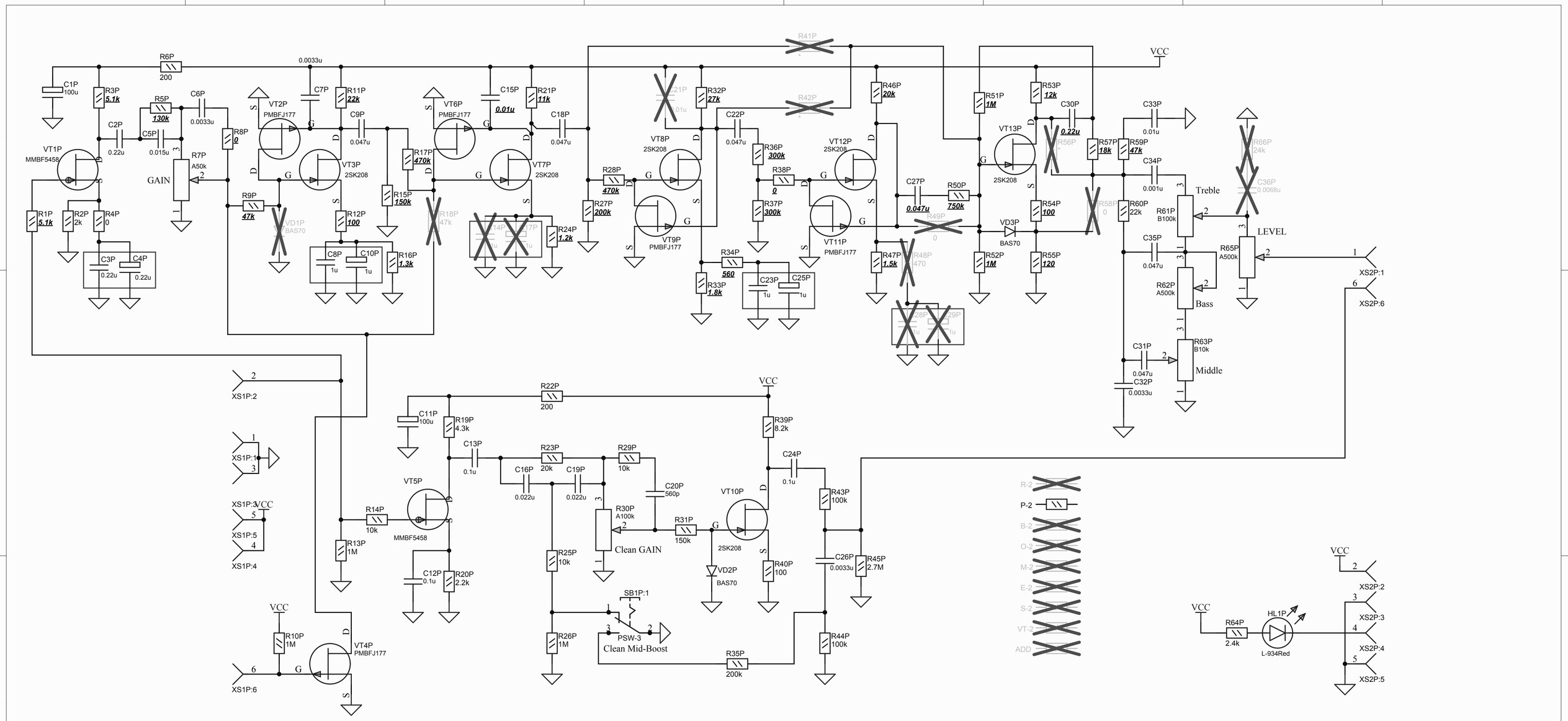

Title *Legend Amps - 2*		Variant: ***P-2***	*AMT Electronics*
Size: A3	Project: LA2P	Revision: 1B	
Date: 02.05.2013		Sheet * of *	
*			