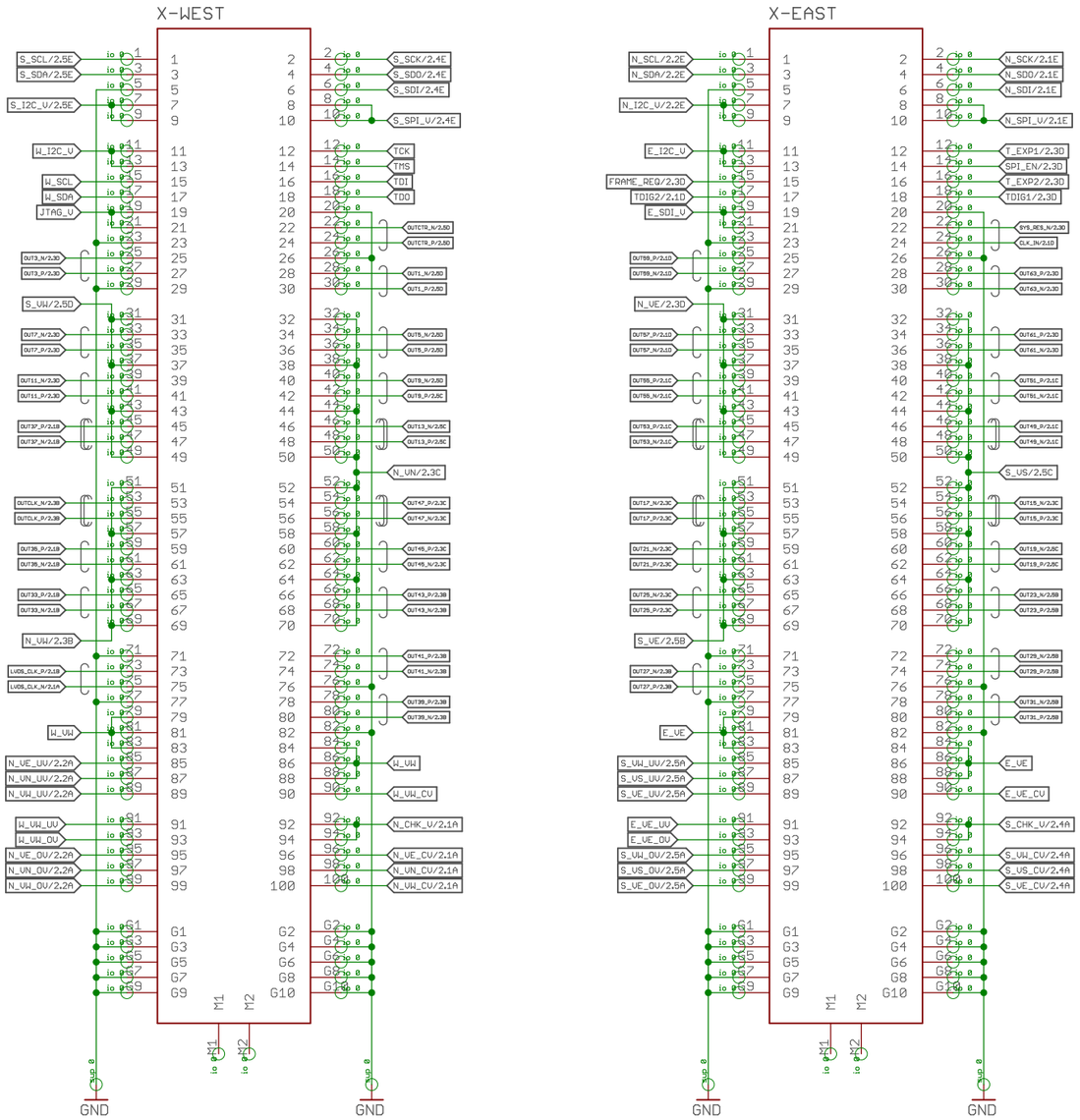

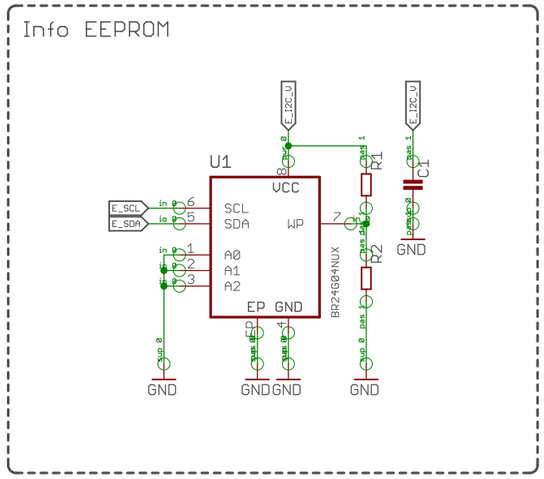

axiom_beta_interface_dummy_v0.7

12/14/21 6:56 PM

Sheet: 1/2

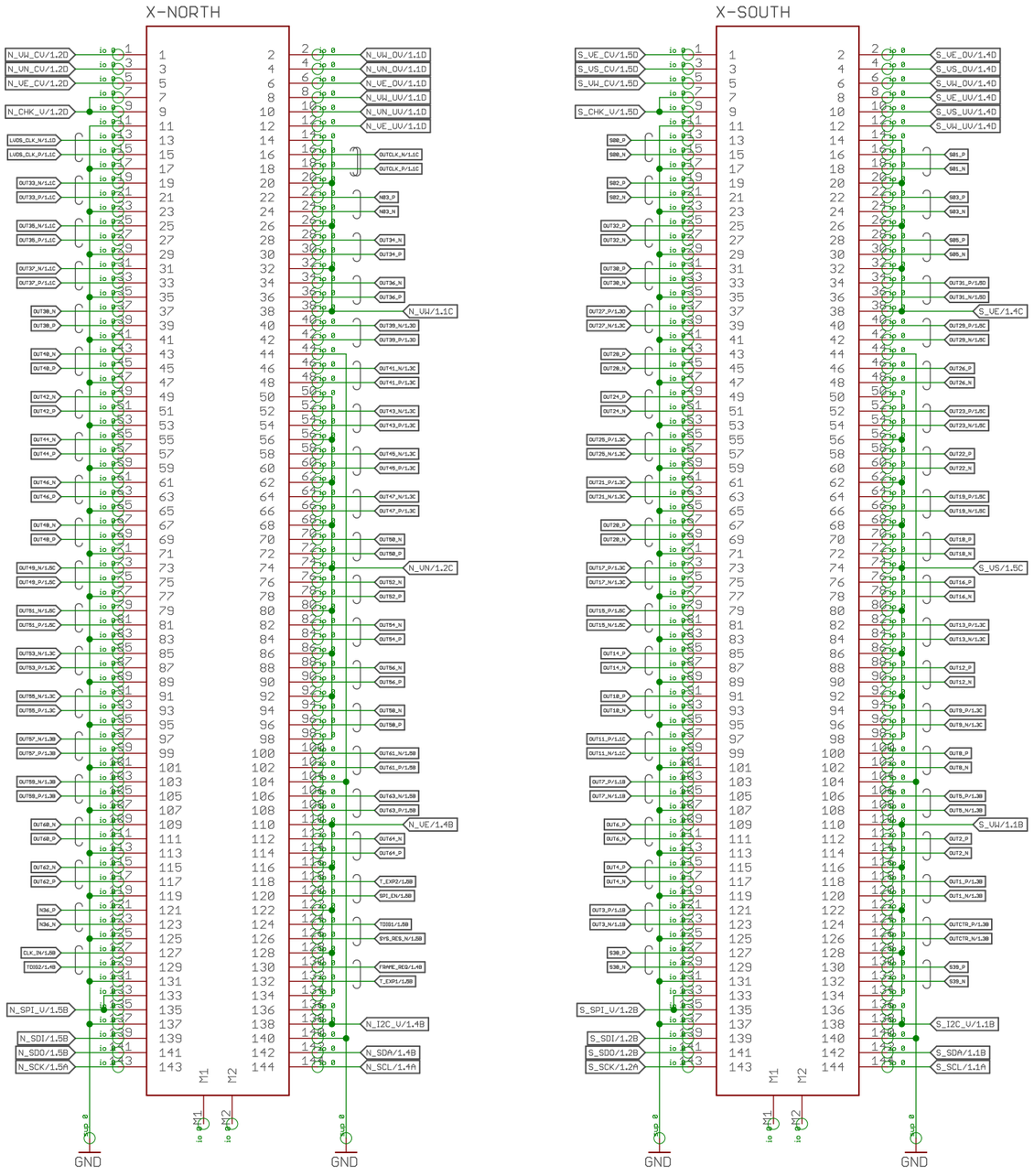

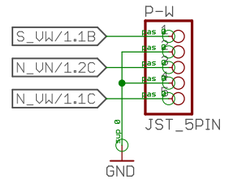

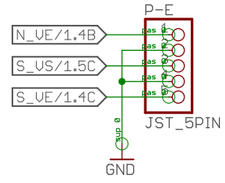

axiom_beta_interface_dummy_v0.7

12/14/21 6:56 PM

Sheet: 2/2