F1
FIDUCIAL

F2
FIDUCIAL

F3
FIDUCIAL

F4
FIDUCIAL

F5
FIDUCIAL

F6
FIDUCIAL

F7
FIDUCIAL

F8
FIDUCIAL

OSHW
LOGO

AXIOM Beta Power Board

Overview

Copyright (C) 2014-2017 H.Poetzl
Licensed under CERN OHL v.1.2

axiom_beta_power_board_v1.25

not saved!

Sheet: 1/14

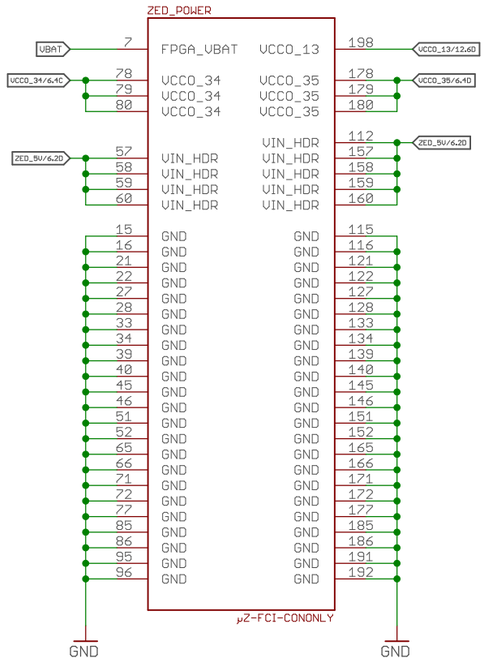

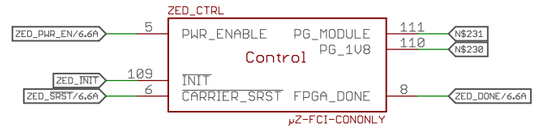

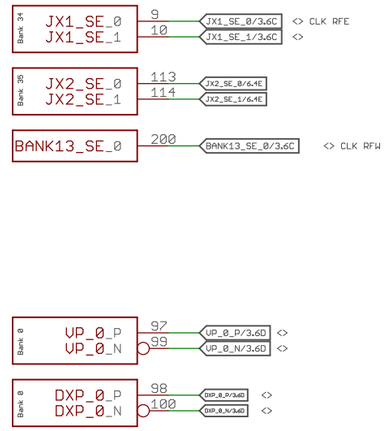

AXIOM Beta Power Board

MicroZed Power

axiom_beta_power_board_v1.25

not saved!

Copyright (C) 2014-2017 H.Poetzl
Licensed under CERN OHL v.1.2

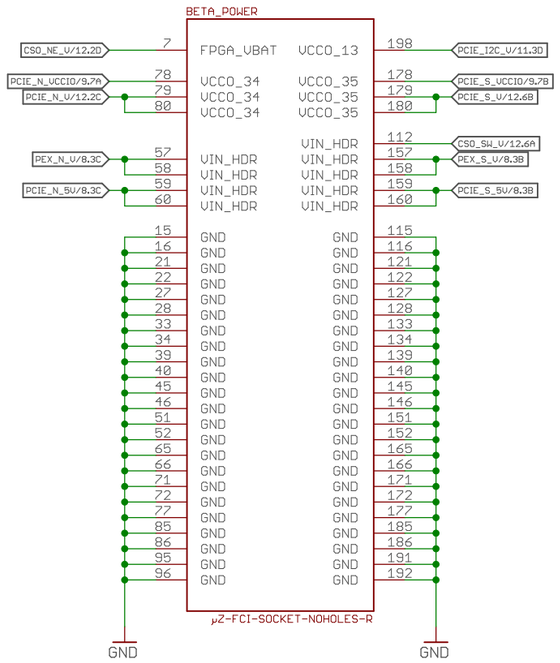

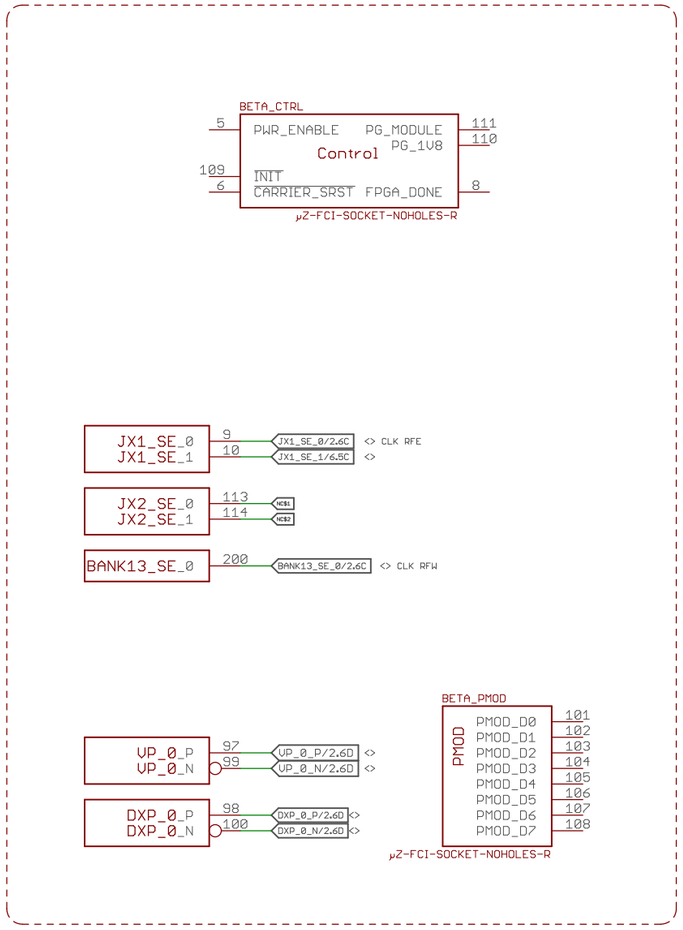

AXIOM Beta Power Board

Beta Main Board Power

axiom_beta_power_board_v1.25

not saved!

Copyright (C) 2014-2017 H.Poetzl
Licensed under CERN OHL v.1.2

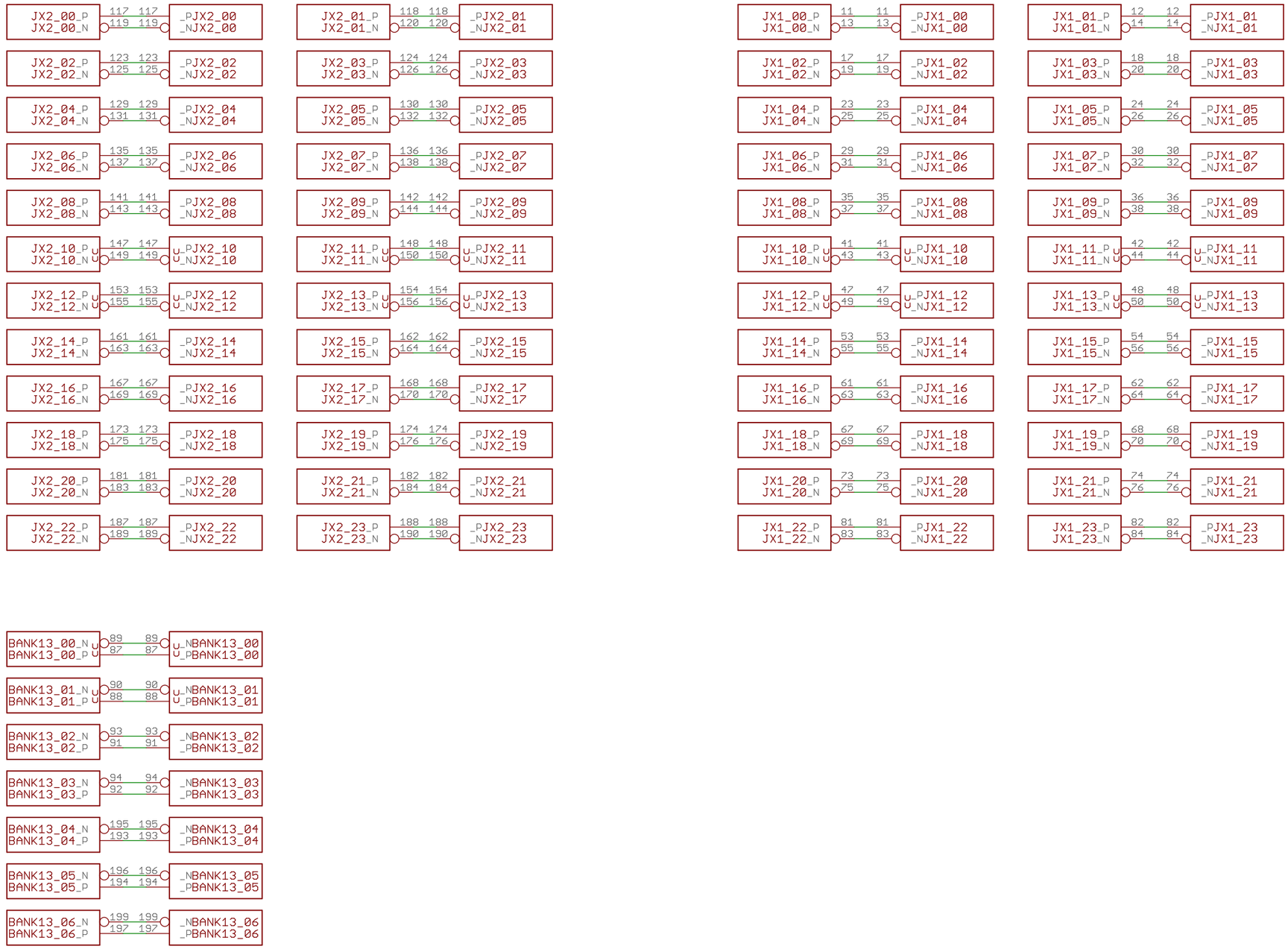

AXIOM Beta Power Board

LVDS Passthrough

axiom_beta_power_board_v1.25

not saved!

Sheet: 4/14

Copyright (C) 2014-2017 H.Poetzl
Licensed under CERN OHL v.1.2

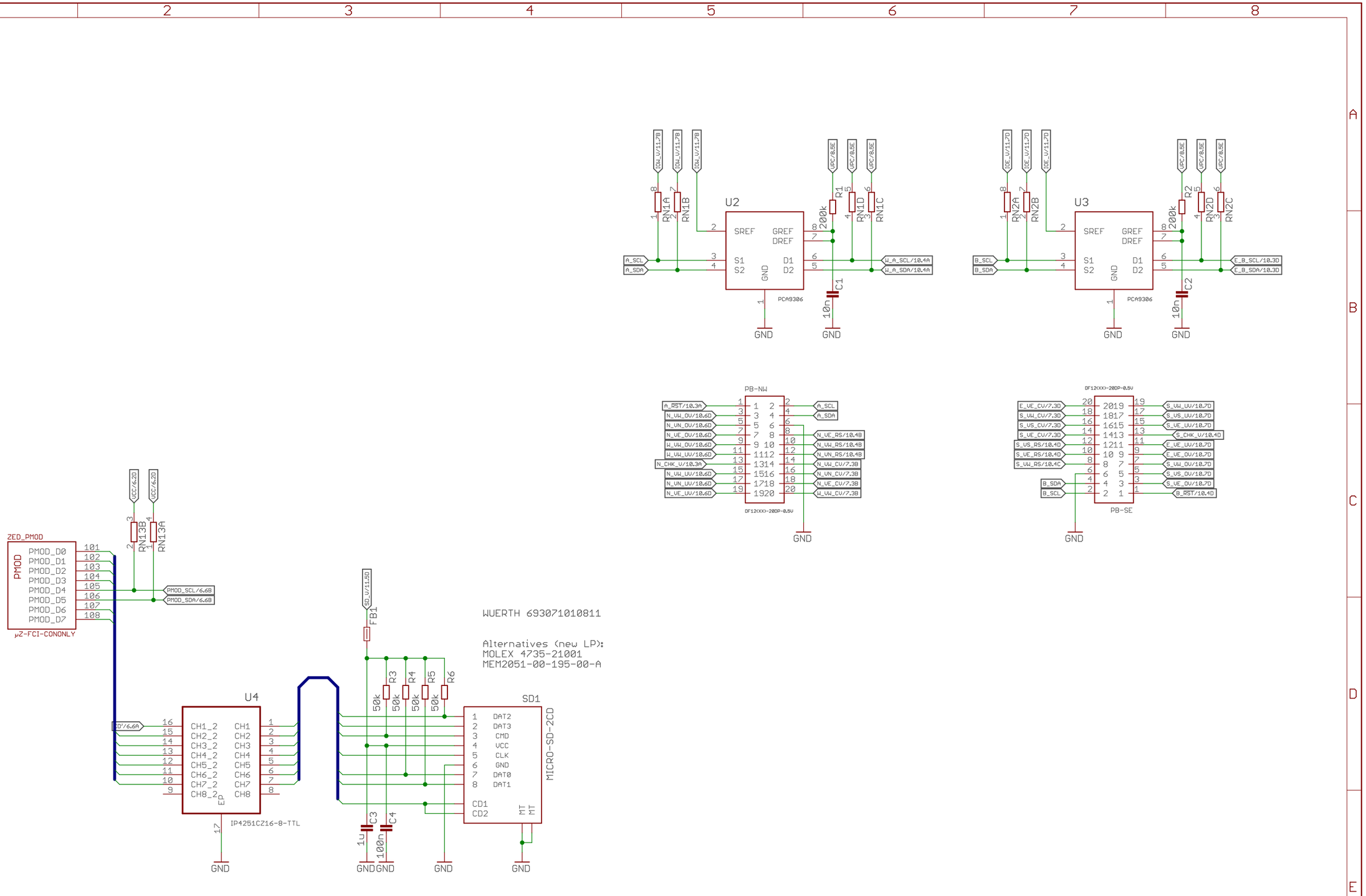

AXIOM Beta Power Board

Level Translation and uSD

axiom_beta_power_board_v1.25

not saved!

Copyright (C) 2014-2017 H.Poetzl
Licensed under CERN OHL v.1.2

Sheet: 5/14

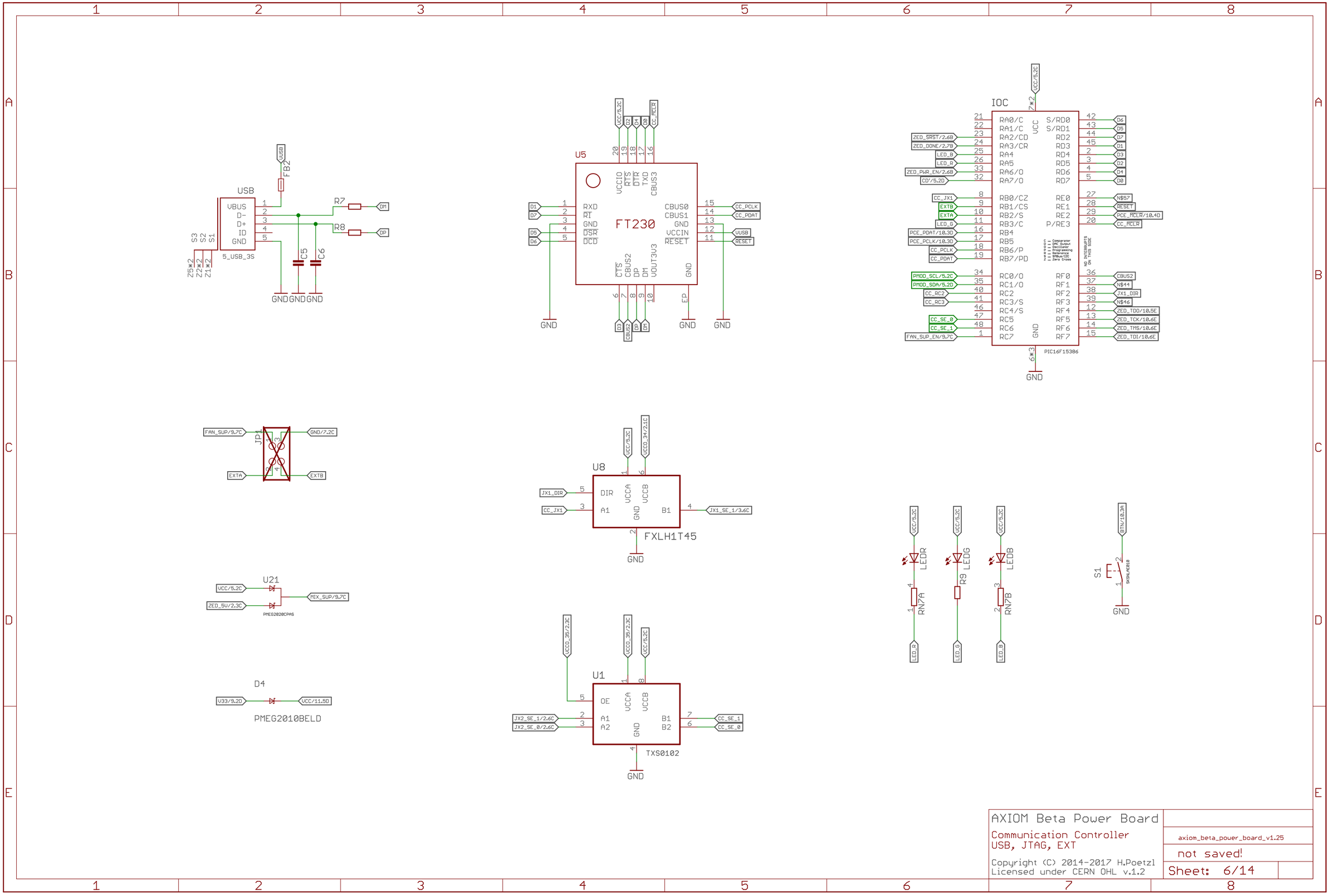

AXIOM Beta Power Board

Communication Controller
USB, JTAG, EXT

Copyright (C) 2014-2017 H.Poetzl
Licensed under CERN OHL v.1.2

axiom_beta_power_board_v1.25

not saved!

Sheet: 6/14

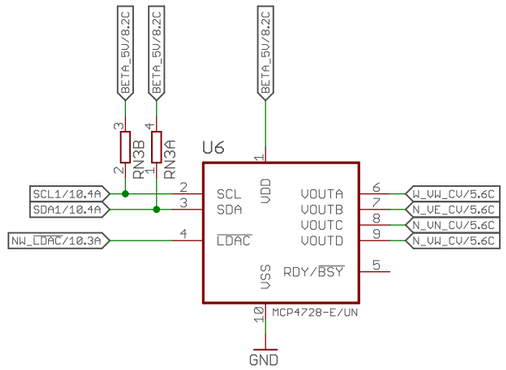

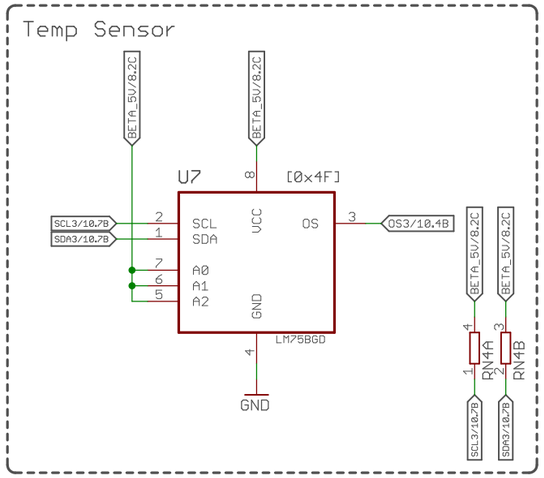

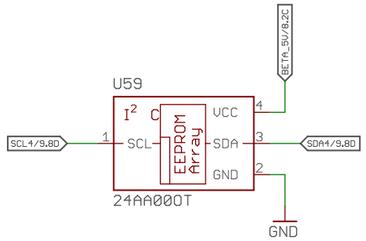

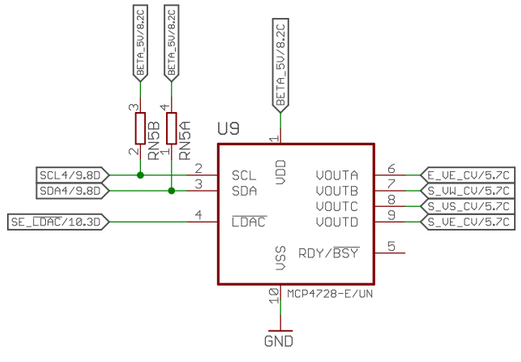

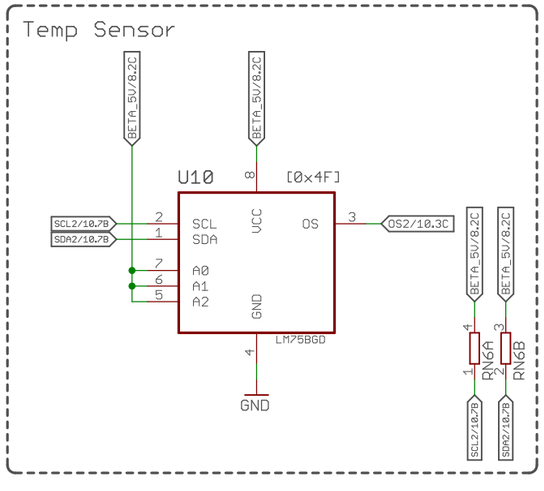

AXIOM Beta Power Board

MicroZed Power

Copyright (C) 2014-2017 H.Poetzl
Licensed under CERN OHL v.1.2

Sheet: 7/14

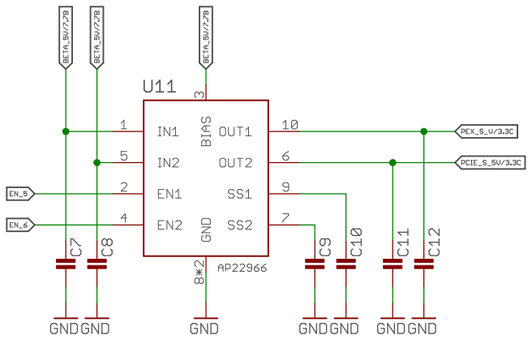

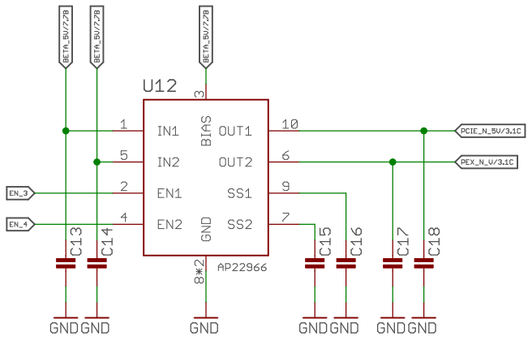

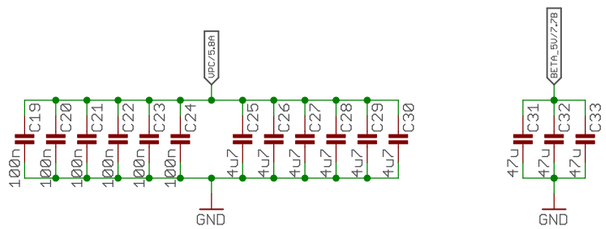

AXIOM Beta Power Board

MicroZed Power

Copyright (C) 2014-2017 H.Poetzl
Licensed under CERN OHL v.1.2

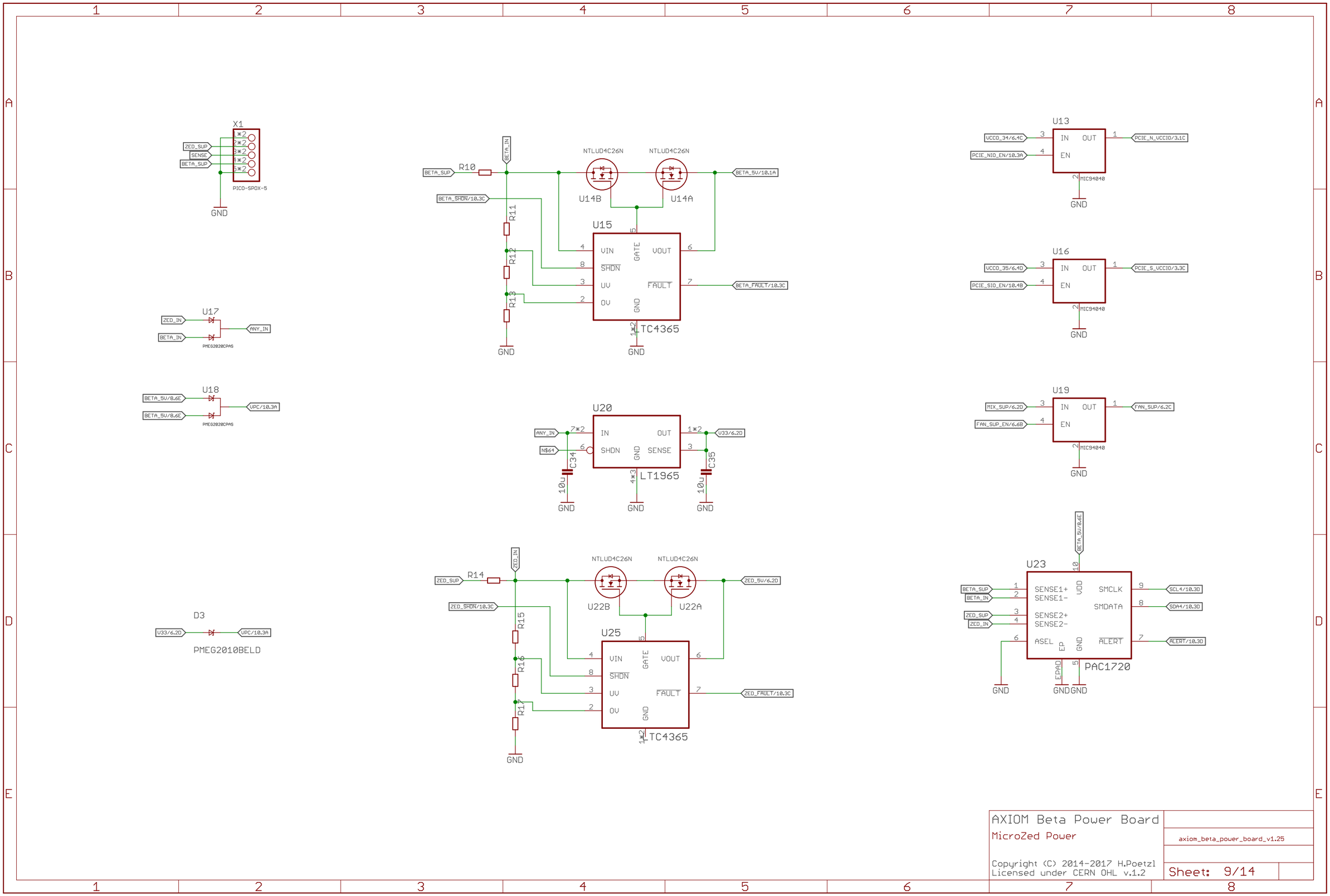

AXIOM Beta Power Board

MicroZed Power

axiom_beta_power_board_v1.25

Copyright (C) 2014-2017 H.Poetzl
Licensed under CERN OHL v.1.2

Sheet: 9/14

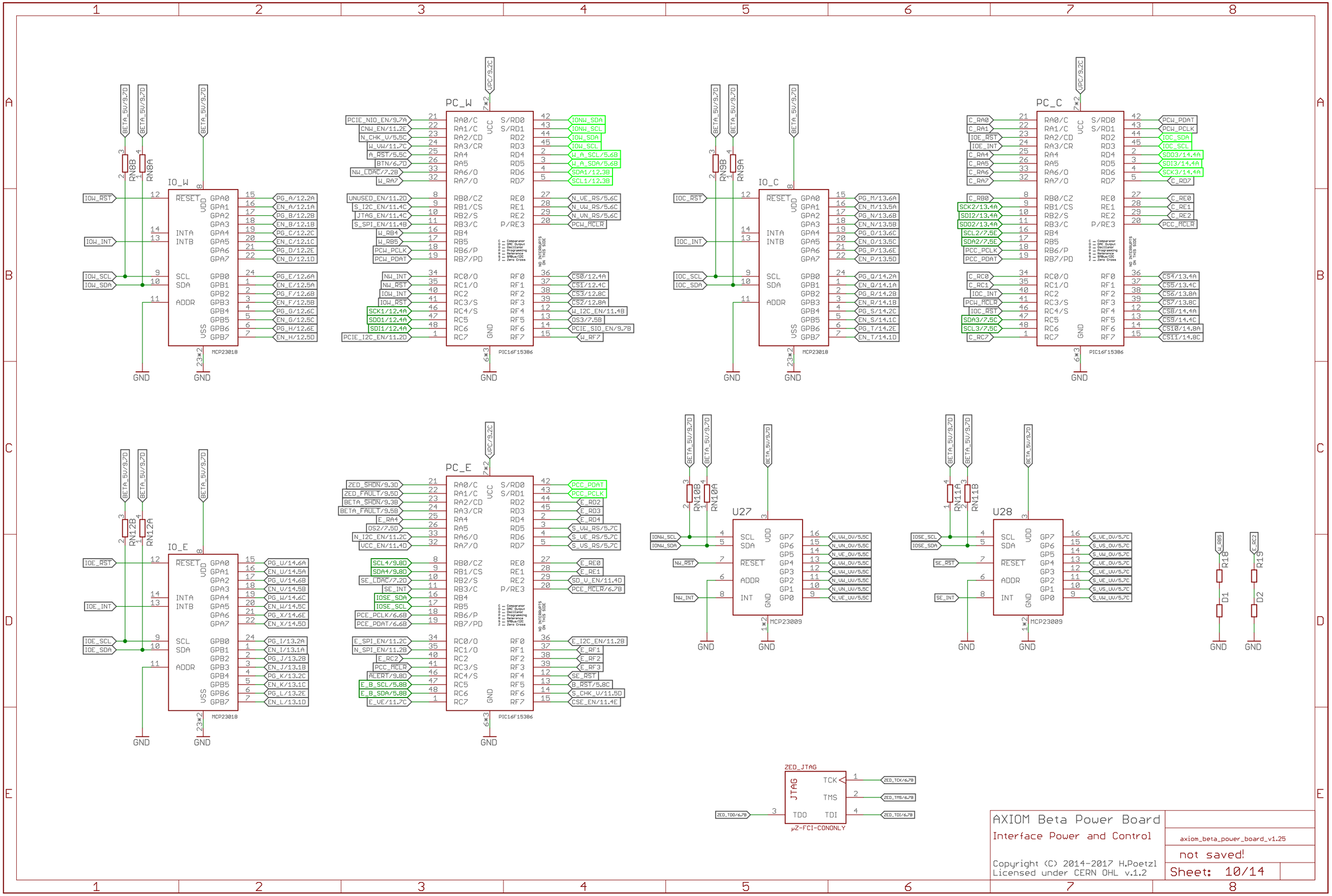
IO_W
MCP23018
PC_W
PIC16F15386
IO_C
MCP23018
PC_C
PIC16F15386
IO_E
MCP23018
PC_E
PIC16F15386
U27
MCP23009
U28
MCP23009
ZED_JTAG
JTAG
TCK
TMS
TDO
TDI
µZ-FCI-CONONLY
BETA_5V/9.7D
VPC/9.2C
GND
RN8B
RN8A
RN9B
RN9A
RN12B
RN12A
RN10B
RN10A
RN11A
RN11B
R18
R19
D1
D2
AXIOM Beta Power Board
Interface Power and Control
axiom_beta_power_board_v1.25
not saved!
Sheet: 10/14
Copyright (C) 2014-2017 H.Poetzl
Licensed under CERN OHL v.1.2

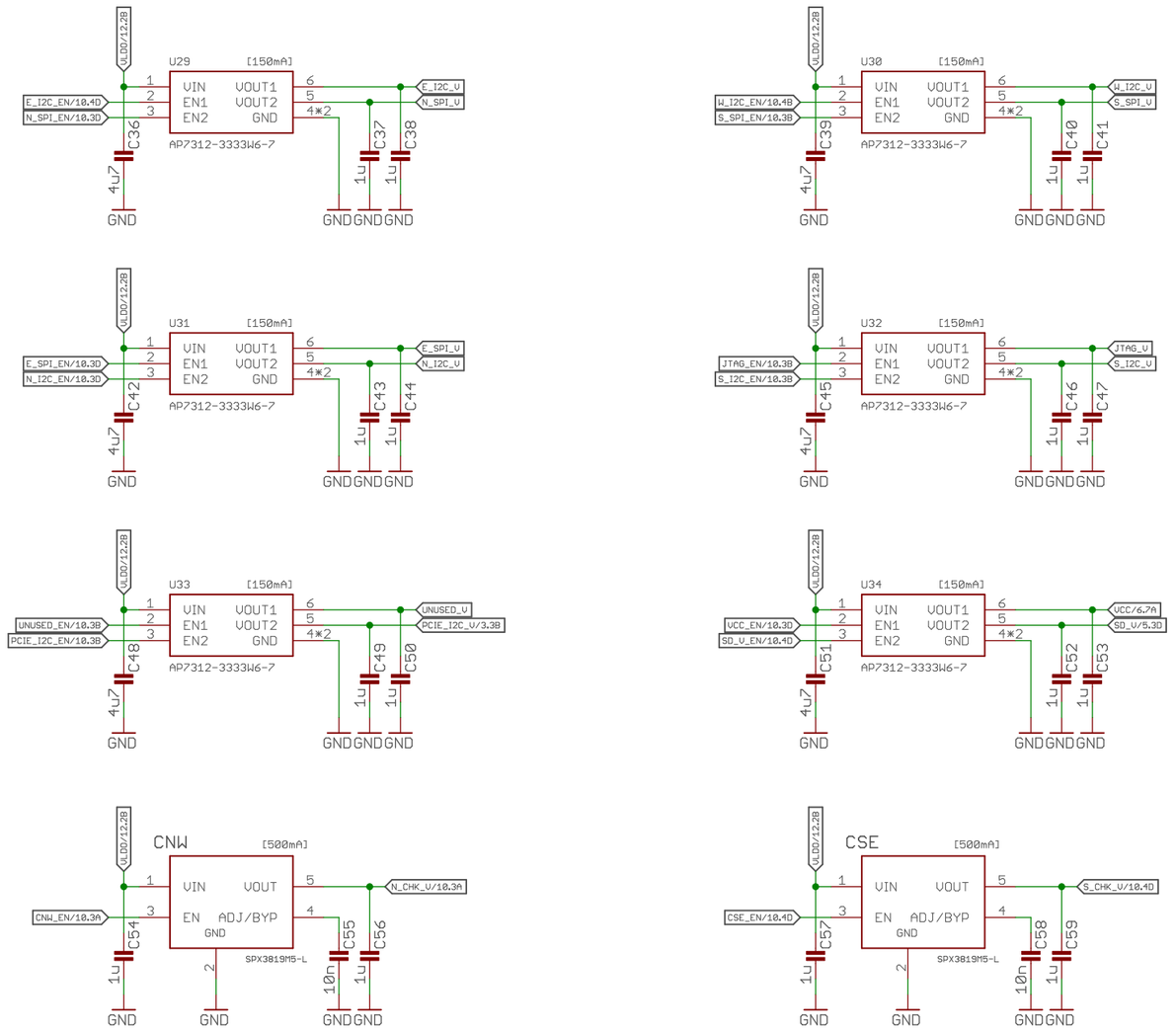

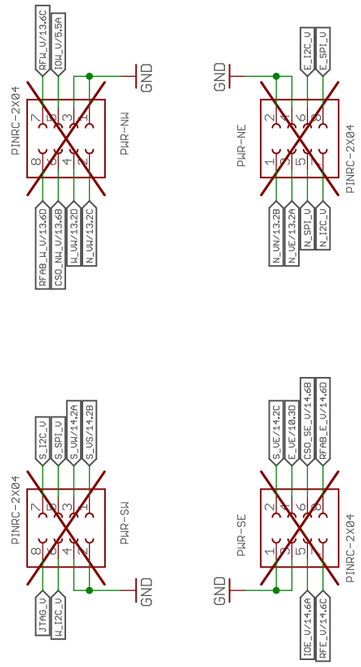

AXIOM Beta Power Board

Interface Power and Control

axiom_beta_power_board_v1.25

not saved!

Copyright (C) 2014-2017 H.Poetzl
Licensed under CERN OHL v.1.2

Sheet: 11/14

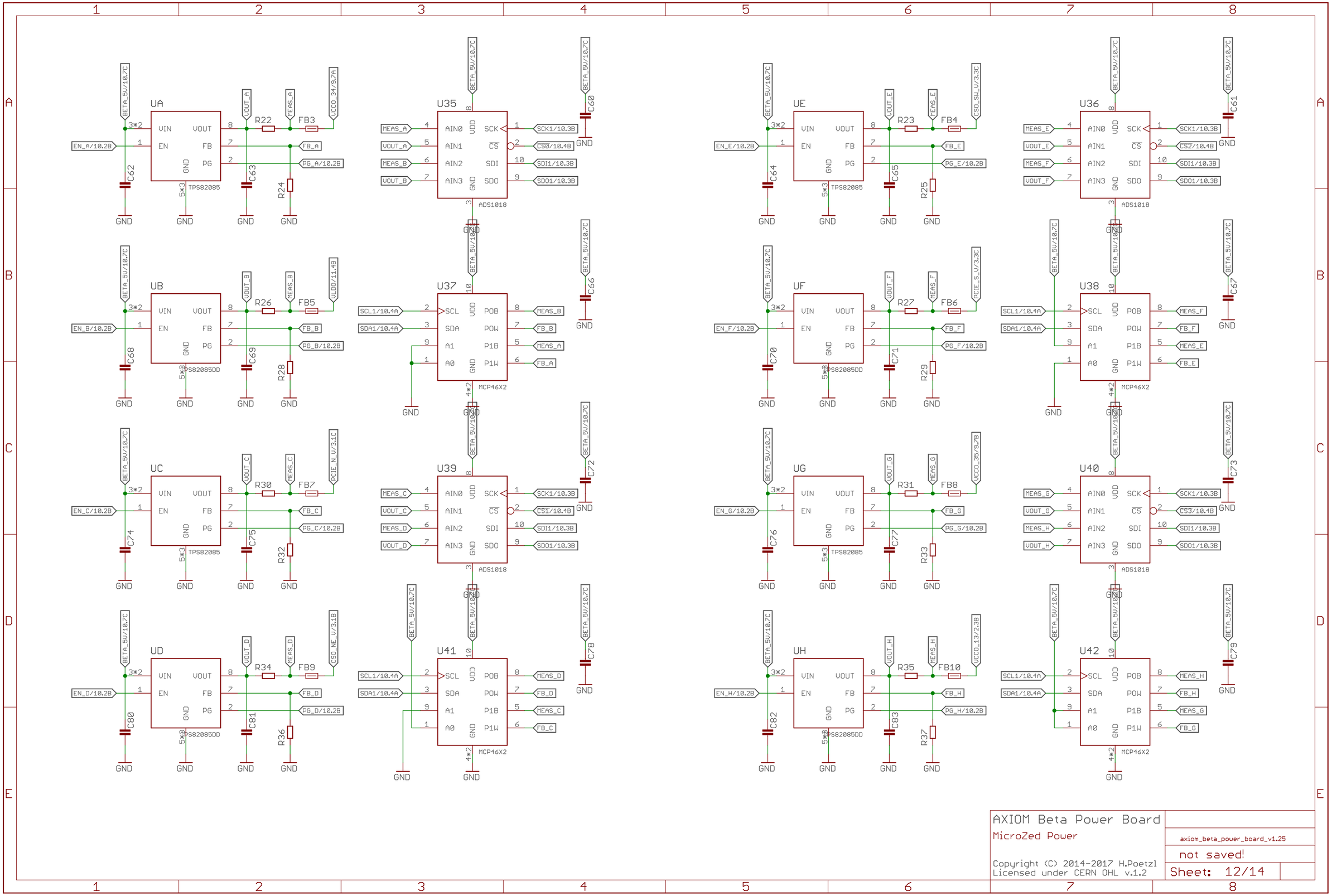
UA
UB
UC
UD
UE
UF
UG
UH
TPS82085
TPS82085DD
U35
U36
U37
U38
U39
U40
U41
U42
ADS1018
MCP46X2
BETA_5V/10.7C
EN_A/10.2B
EN_B/10.2B
EN_C/10.2B
EN_D/10.2B
EN_E/10.2B
EN_F/10.2B
EN_G/10.2B
EN_H/10.2B
PG_A/10.2B
PG_B/10.2B
PG_C/10.2B
PG_D/10.2B
PG_E/10.2B
PG_F/10.2B
PG_G/10.2B
PG_H/10.2B
FB_A
FB_B
FB_C
FB_D
FB_E
FB_F
FB_G
FB_H
MEAS_A
MEAS_B
MEAS_C
MEAS_D
MEAS_E
MEAS_F
MEAS_G
MEAS_H
VOUT_A
VOUT_B
VOUT_C
VOUT_D
VOUT_E
VOUT_F
VOUT_G
VOUT_H
VCCO_34/9.7A
VLDO/11.4B
PCIE_N_V/3.1C
CSO_NE_V/3.1B
CSO_SW_V/3.3C
PCIE_S_V/3.3C
VCCO_35/9.7B
VCCO_13/2.3B
SCK1/10.3B
CS0/10.4B
CS1/10.4B
CS2/10.4B
CS3/10.4B
SDI1/10.3B
SDO1/10.3B
SCL1/10.4A
SDA1/10.4A
GND
AXIOM Beta Power Board
MicroZed Power
Copyright (C) 2014-2017 H.Poetzl
Licensed under CERN OHL v.1.2
axiom_beta_power_board_v1.25
not saved!
Sheet: 12/14

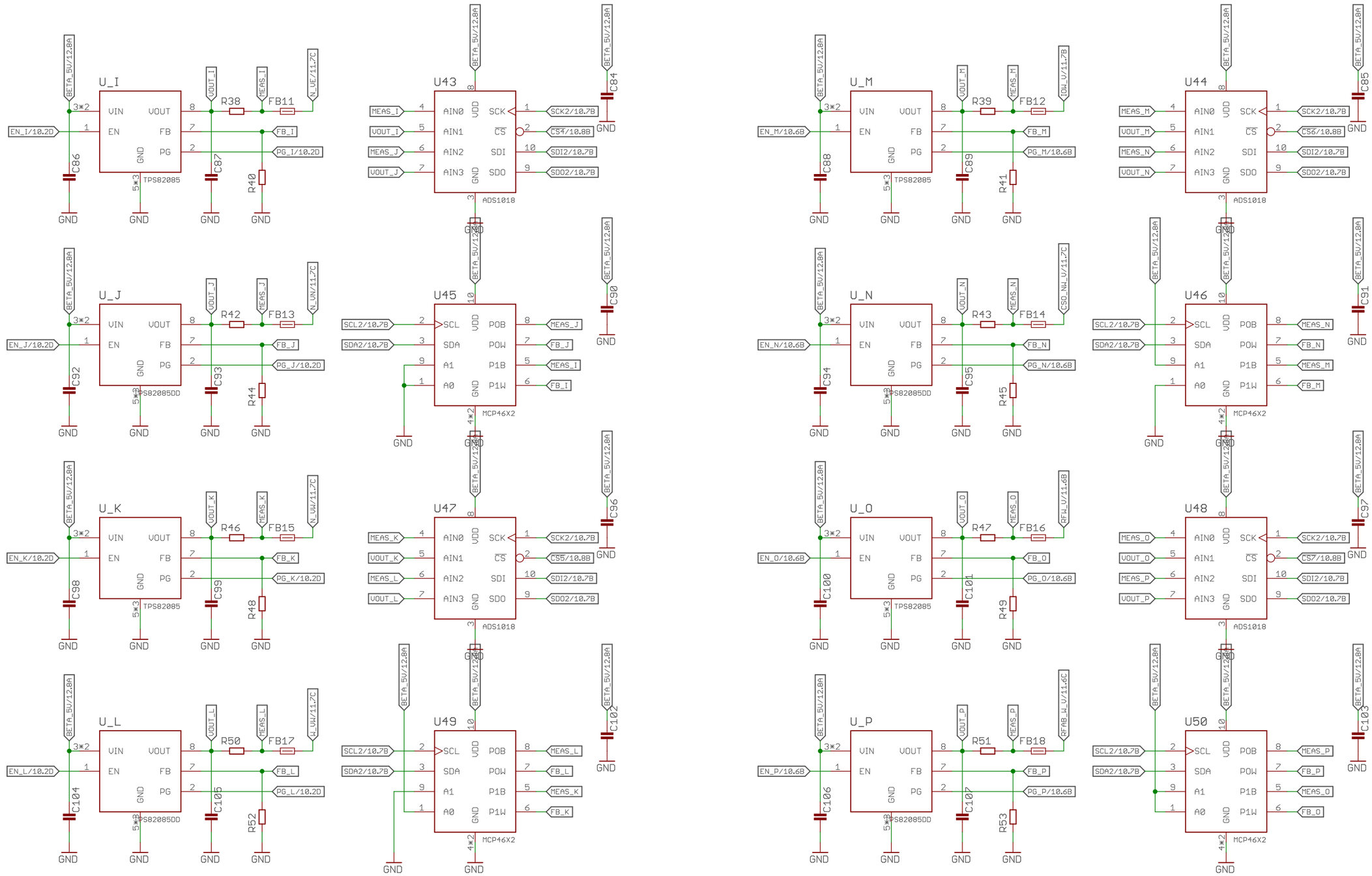

AXIOM Beta Power Board

MicroZed Power

axiom_beta_power_board_v1.25

Copyright (C) 2014-2017 H.Poetzl
Licensed under CERN OHL v.1.2

Sheet: 13/14

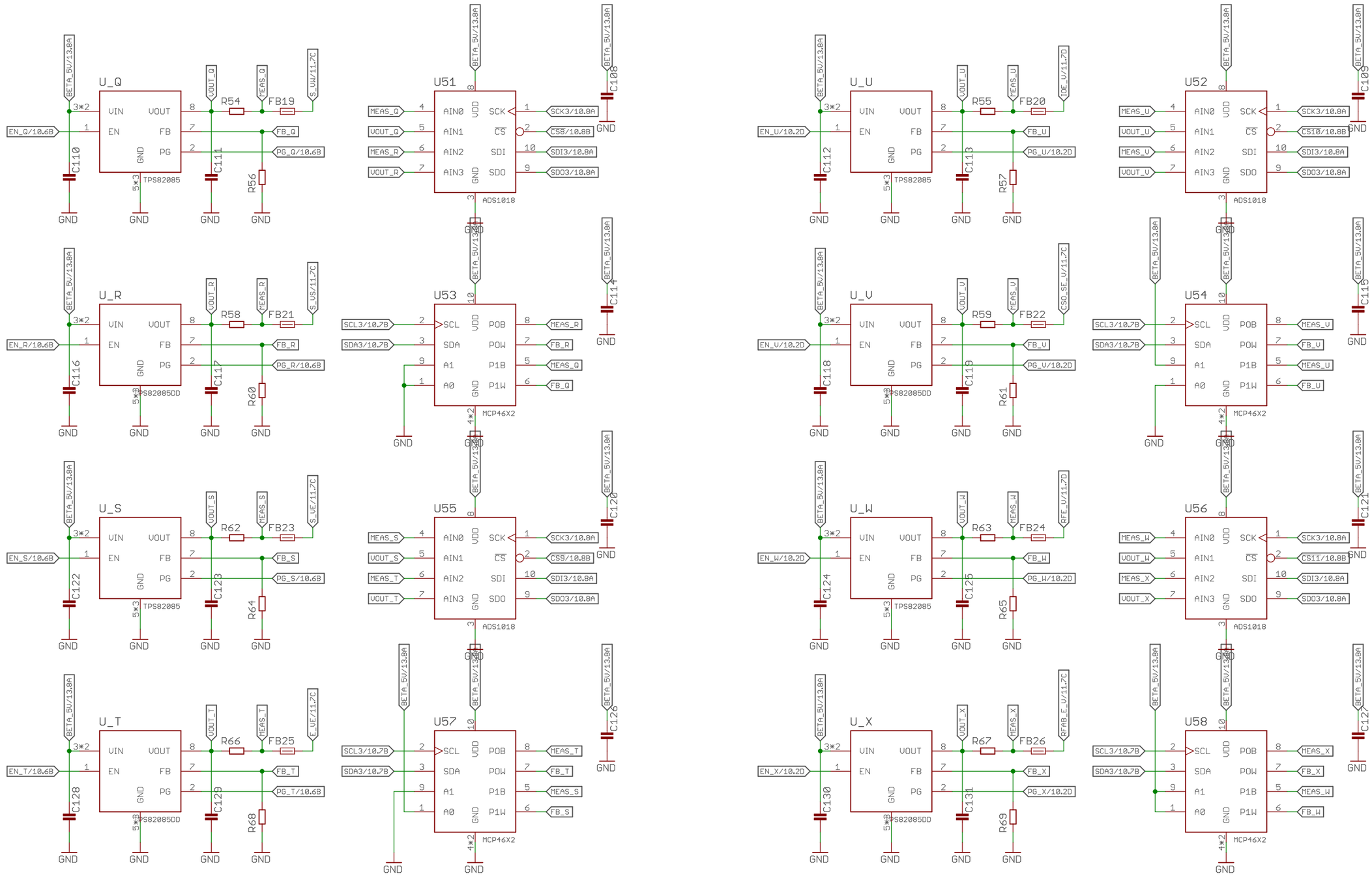

AXIOM Beta Power Board

MicroZed Power

Copyright (C) 2014-2017 H.Poetzl
Licensed under CERN OHL v.1.2

Sheet: 14/14