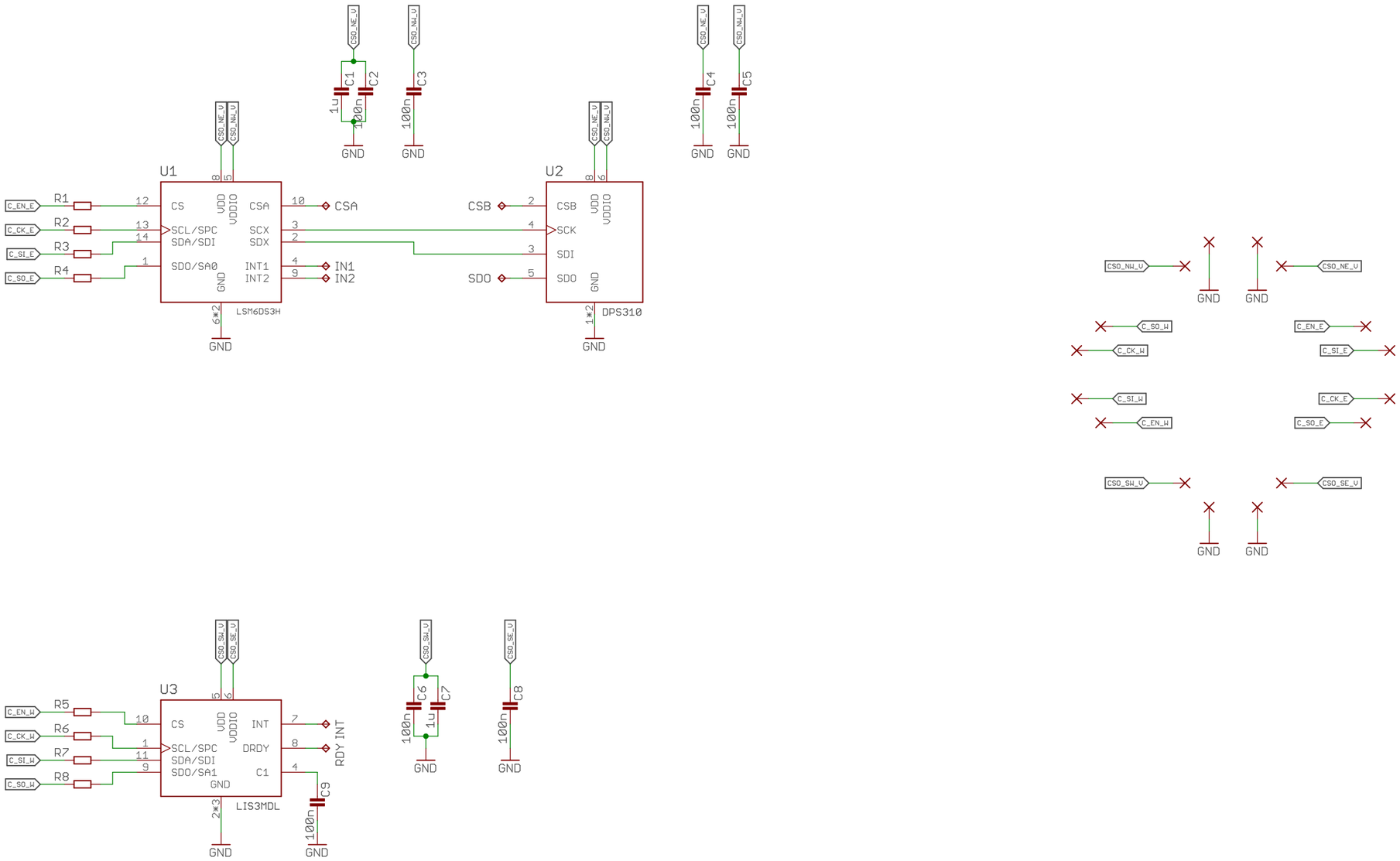

AXIOM Beta Center Solder Connection

On

axiom_beta_imu_cso_v0.1_r1.1

12/14/21 6:56 PM

Sheet: 1/1

Copyright (C) 2015 H.Poetzl
Licensed under CERN OHL v.1.2