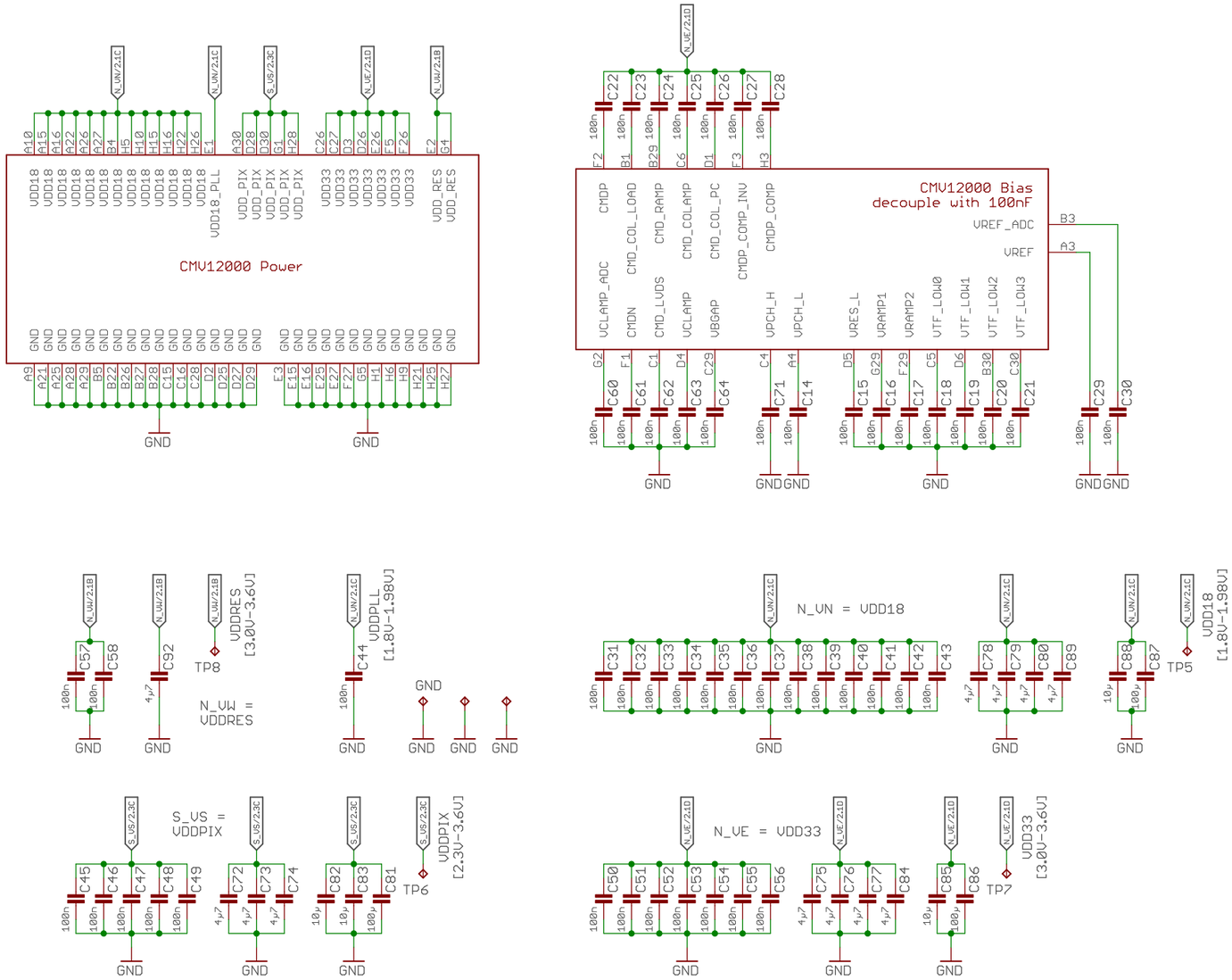

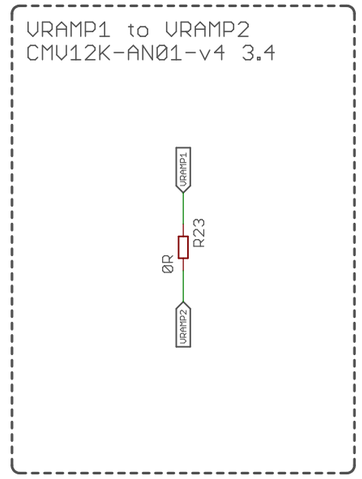

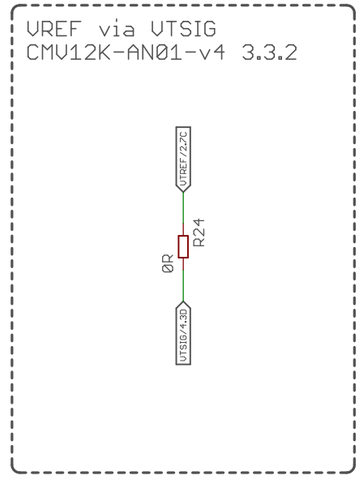

AXIOM Beta CMV12000

Power and Decoupling

4 Voltages

Copyright (C) 2014-2015 Herbert Poetzl
Licensed under CERN OHL v.1.2

axiom_beta_sensor_cmv12000_thi_v0.16c

12/14/21 7:01 PM

Sheet: 1/4

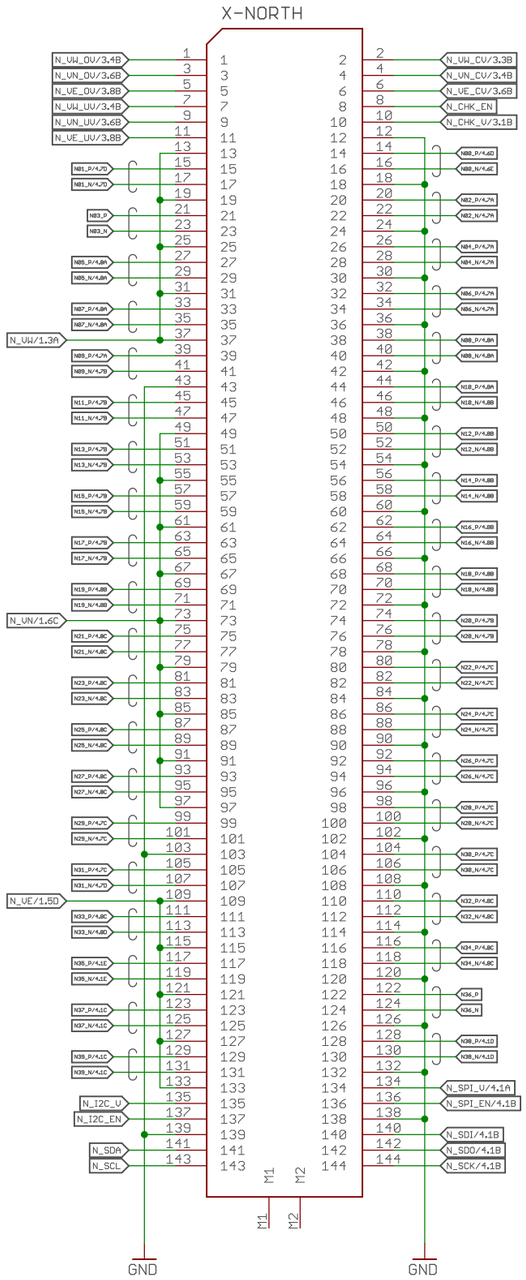

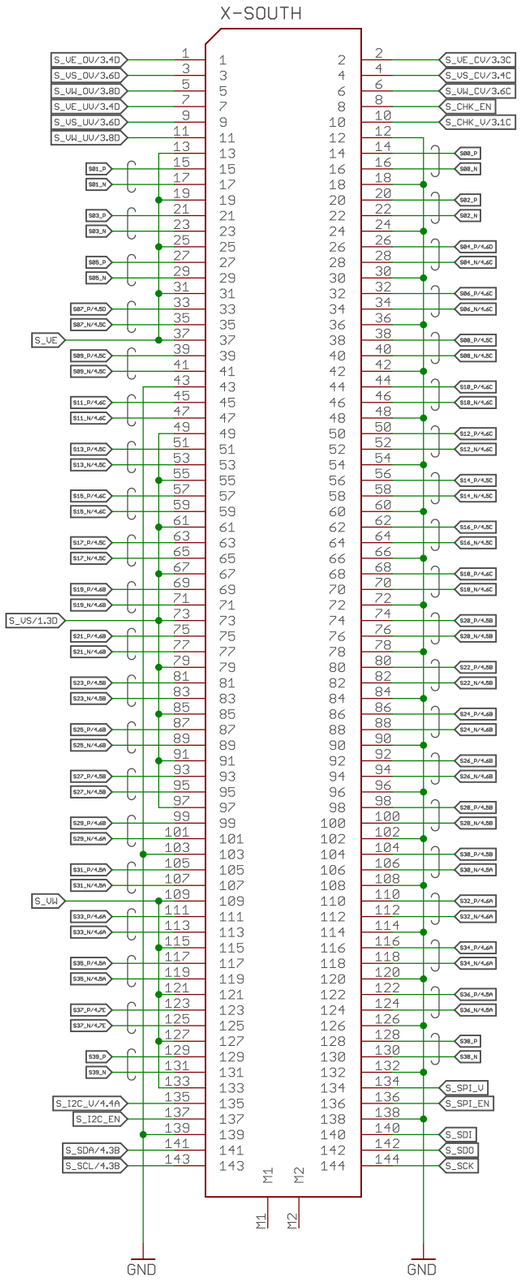

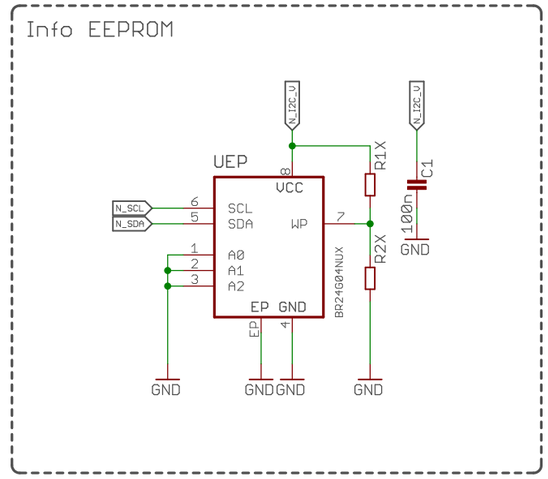

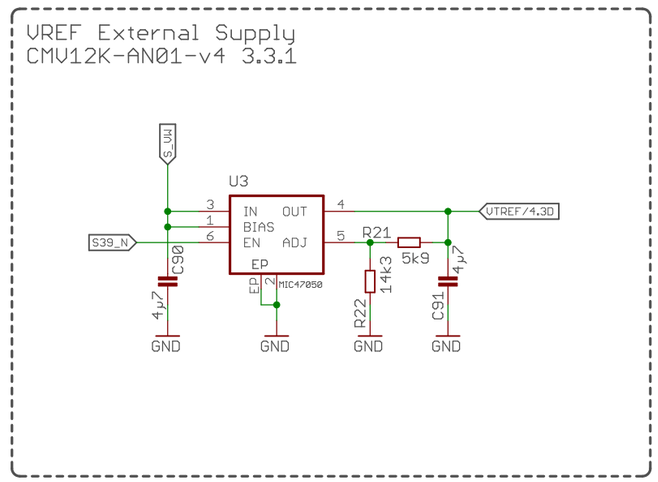

AXIOM Beta CMV12000

Interface, Info and VREF

Optional VREF Supply

Copyright (C) 2014-2015 Herbert Poetzl
Licensed under CERN OHL v.1.2

axiom_beta_sensor_cmv12000_thi_v0.16c

12/14/21 7:01 PM

Sheet: 2/4

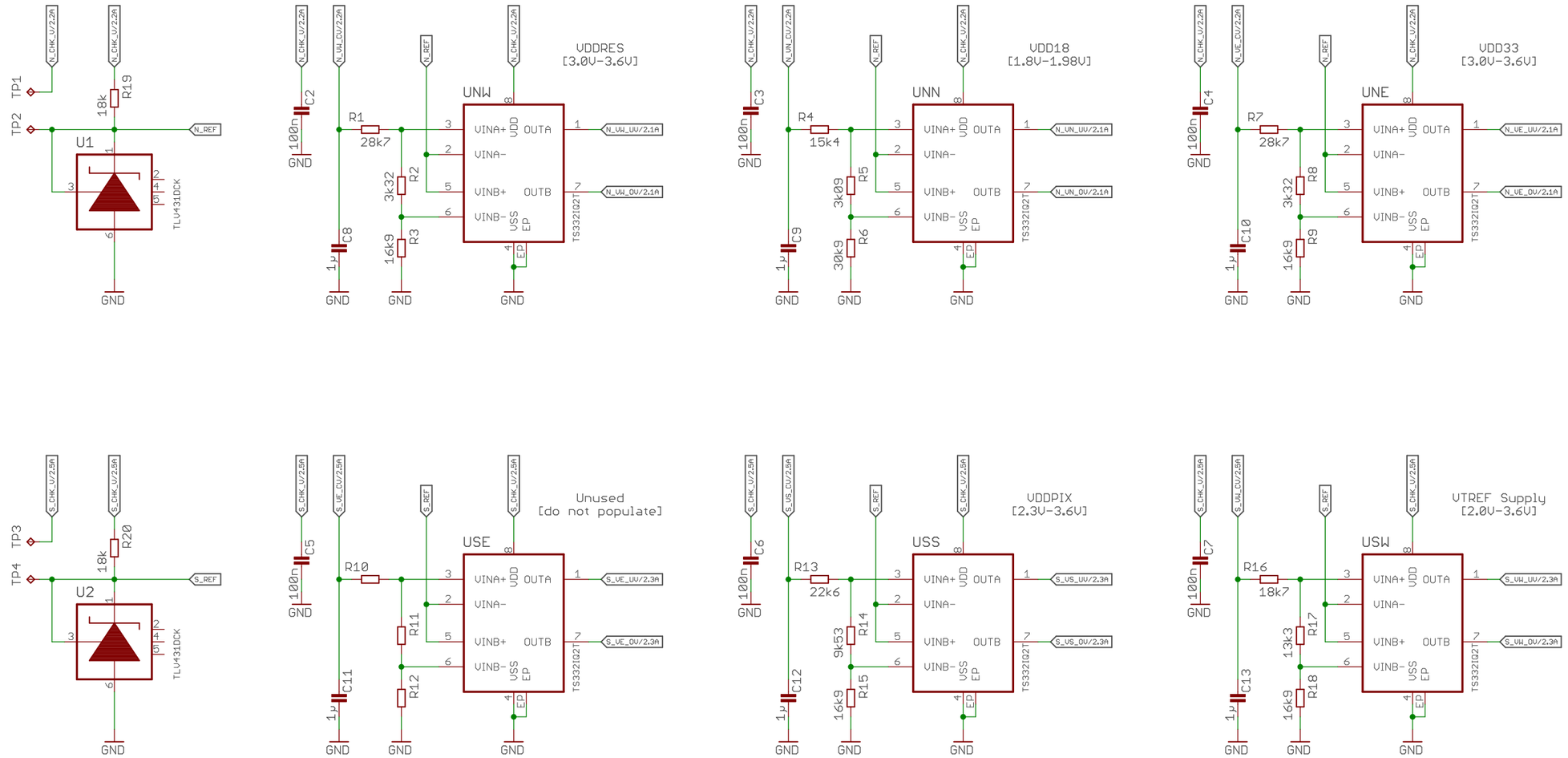

AXIOM Beta CMV12000

Over/Under Voltage Check axiom_beta_sensor_cmv12000_thr_v0.16c

4/5 Voltages

12/14/21 7:01 PM

Copyright (C) 2014-2015 Herbert Poetzl
Licensed under CERN OHL v.1.2

Sheet: 3/4

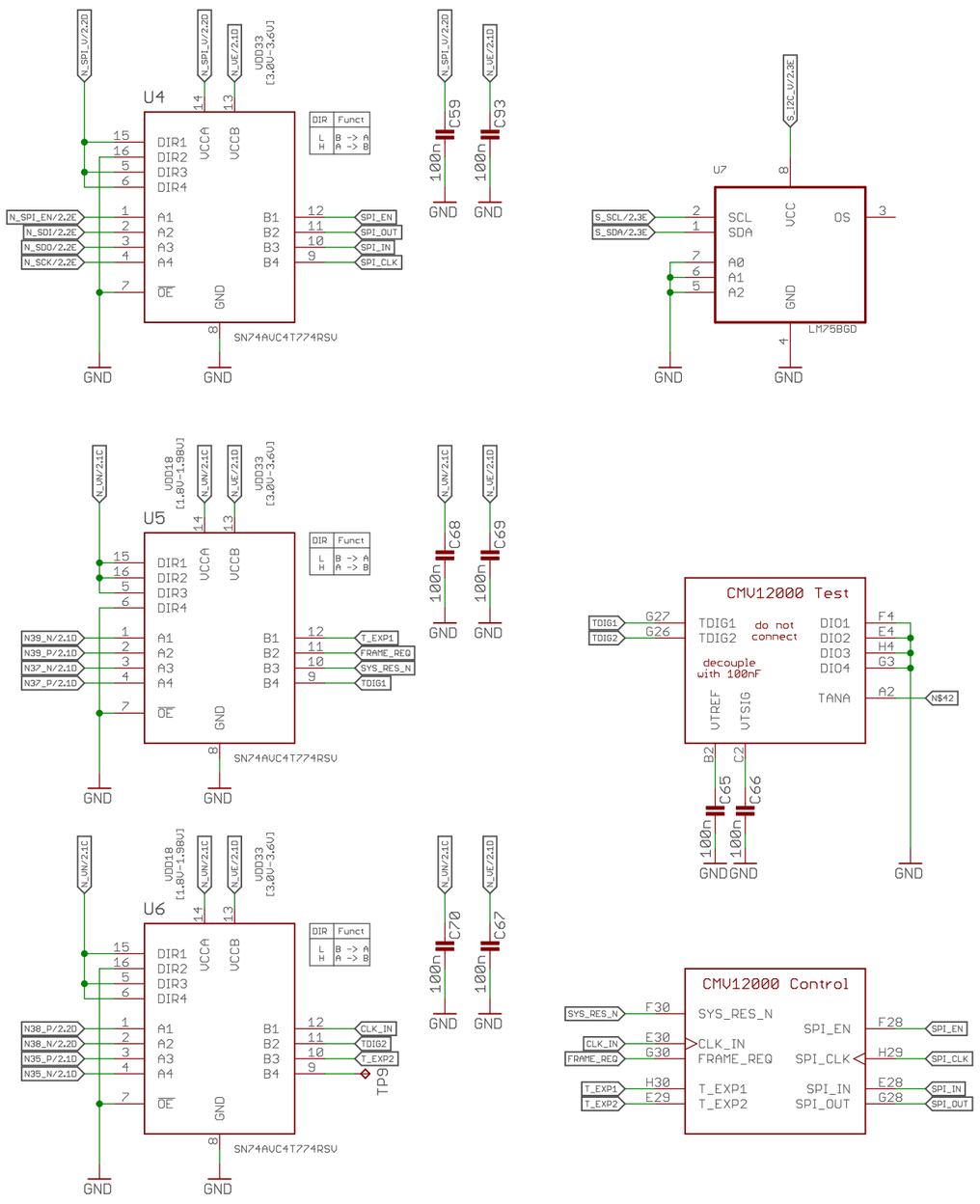

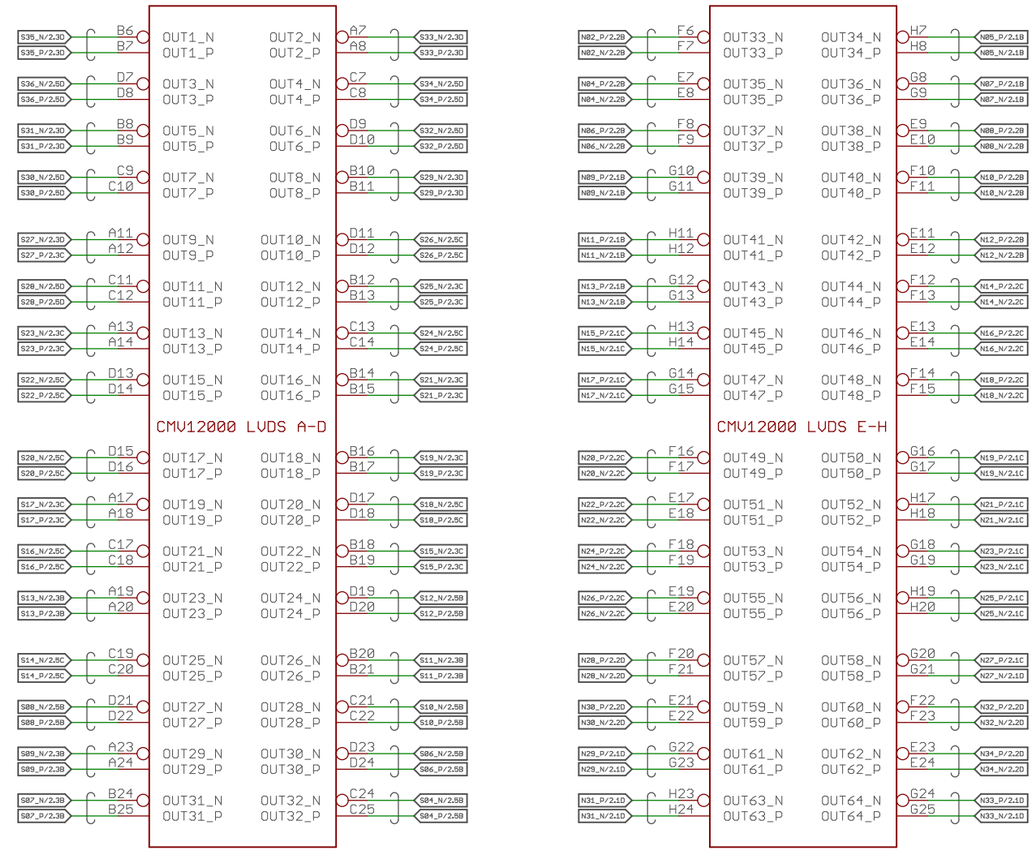

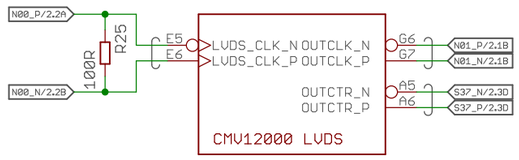

AXIOM Beta CMV12000

CMV12000 DIO and LVDS

Including TDIG1/TDIG2

Copyright (C) 2014-2015 Herbert Poetzl
Licensed under CERN OHL v.1.2

axiom_beta_sensor_cmv12000_tht_v0.16c

12/14/21 7:01 PM

Sheet: 4/4