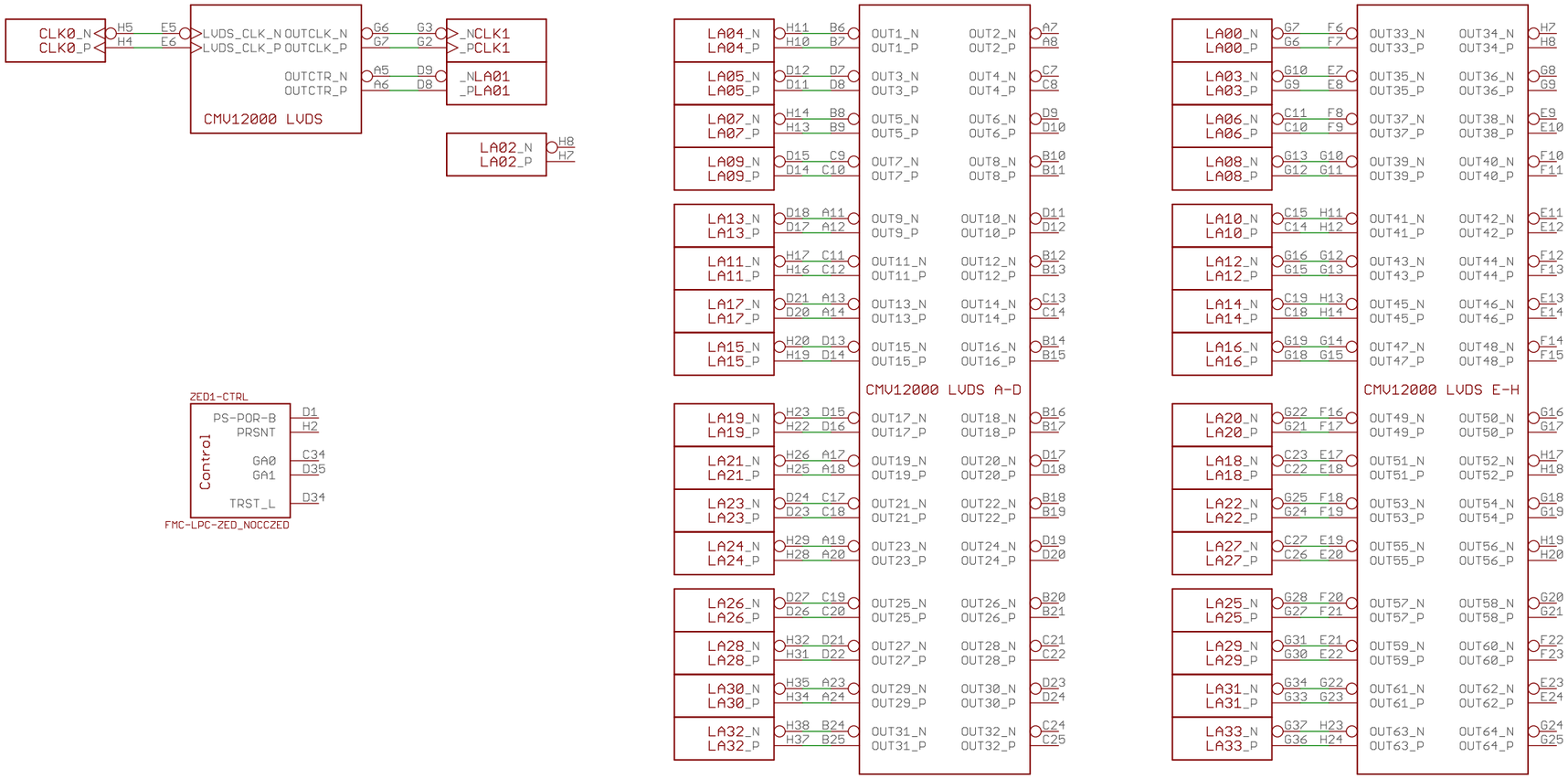

CMV12000 FMC ADAPTER — V0.8.3

LVDS and Control Interface — quad-center-v0.8.3

Max. 32 Channels, Two sided read-out

Copyright (C) 2013 H.Poetzl
Licensed under CERN OHL v.1.1

17 Dec 2021 03:57:15

Sheet: 1/3

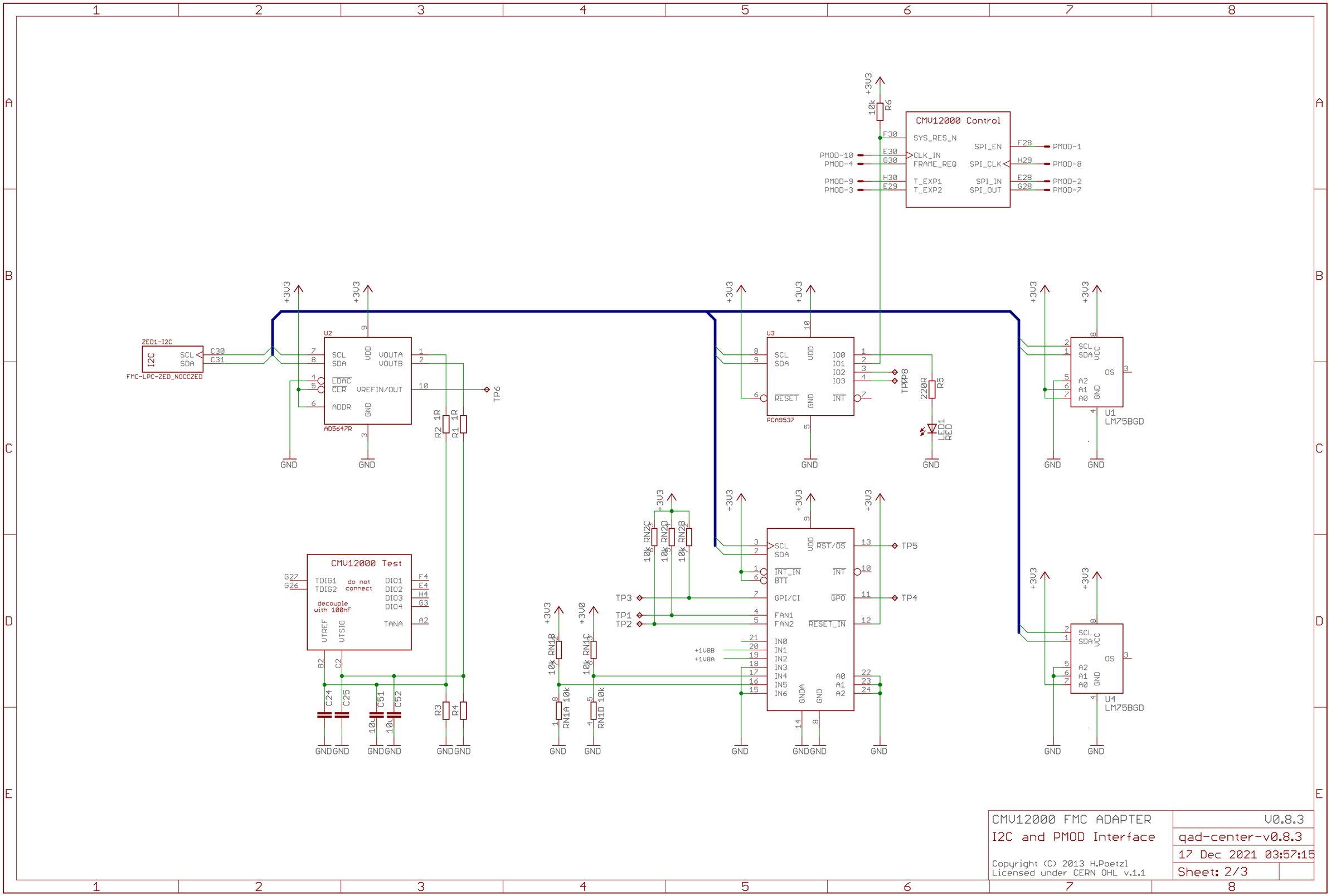

CMV12000 FMC ADAPTER
I2C and PMOD Interface

Copyright (C) 2013 H.Poetzl
Licensed under CERN OHL v.1.1

V0.8.3
qad-center-v0.8.3
17 Dec 2021 03:57:15
Sheet: 2/3

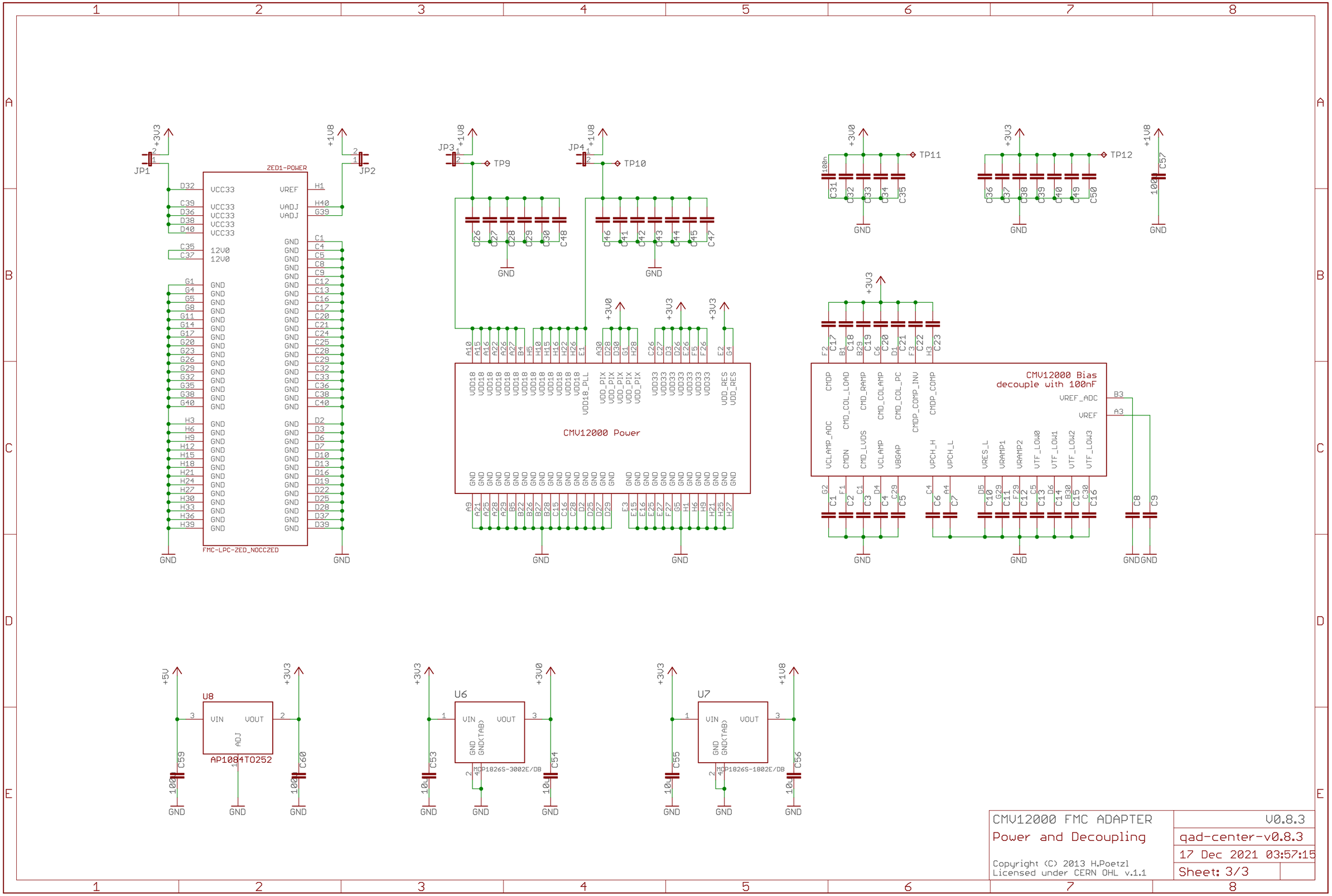
ZED1-POWER
FMC-LPC-ZED_NOCCZED
CMV12000 Power
CMV12000 Bias
decouple with 100nF
U8
AP1084TO252
U6
MCP1826S-3002E/DB
U7
MCP1826S-1802E/DB
CMV12000 FMC ADAPTER
Power and Decoupling
V0.8.3
qad-center-v0.8.3
17 Dec 2021 03:57:15
Sheet: 3/3
Copyright (C) 2013 H.Poetzl
Licensed under CERN OHL v.1.1