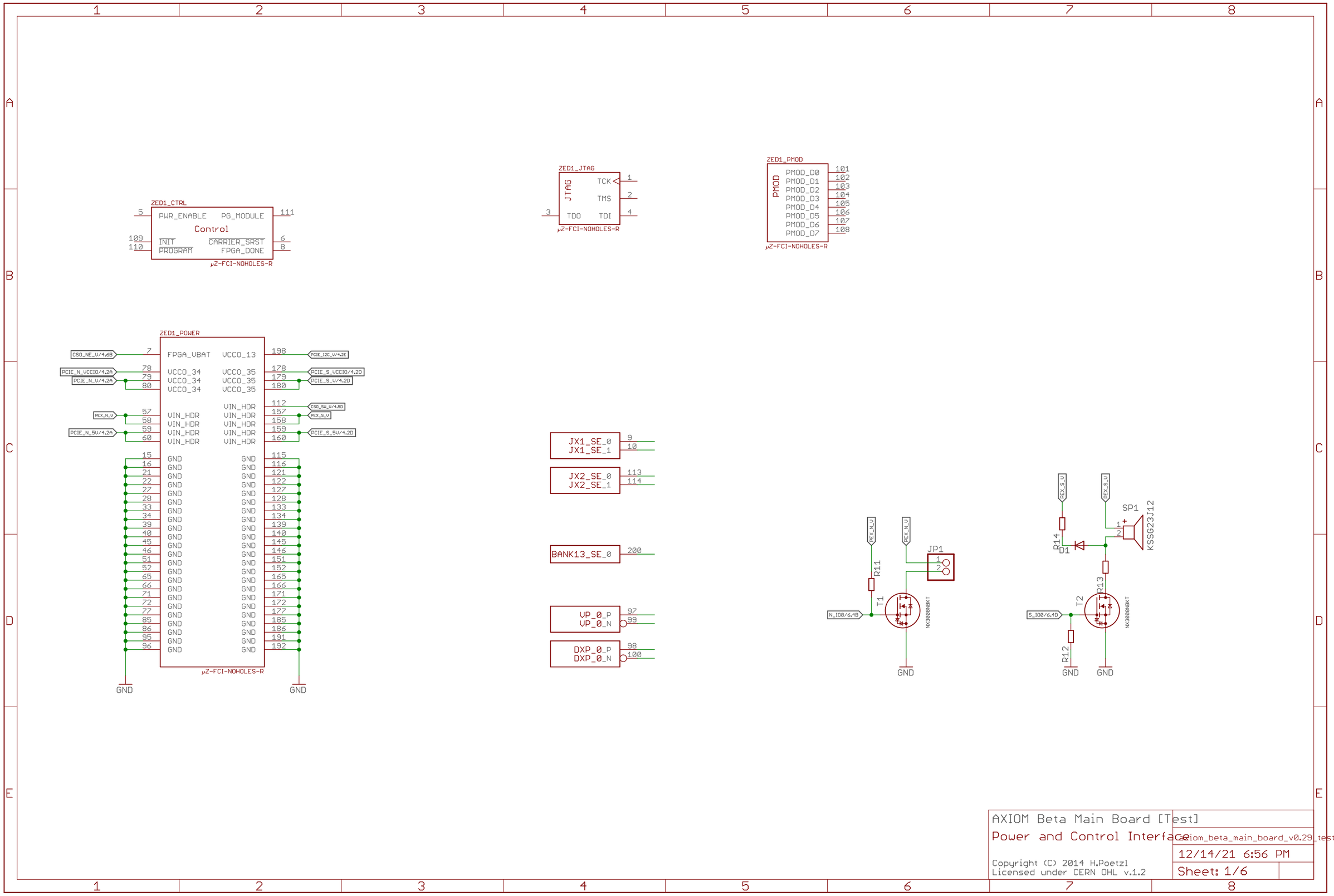
ZED1_CTRL
PWR_ENABLE
PG_MODULE
Control
INIT
CARRIER_SRST
PROGRAM
FPGA_DONE
µZ-FCI-NOHOLES-R
ZED1_JTAG
JTAG
TCK
TMS
TDO
TDI
µZ-FCI-NOHOLES-R
ZED1_PMOD
PMOD
PMOD_D0
PMOD_D1
PMOD_D2
PMOD_D3
PMOD_D4
PMOD_D5
PMOD_D6
PMOD_D7
µZ-FCI-NOHOLES-R
ZED1_POWER
FPGA_VBAT
VCCO_13
VCCO_34
VCCO_35
VIN_HDR
GND
µZ-FCI-NOHOLES-R
CS0_NE_V/4.6B
PCIE_N_VCCIO/4.2A
PCIE_N_V/4.2A
PEX_N_V
PCIE_N_5V/4.2A
PCIE_I2C_V/4.2E
PCIE_S_VCCIO/4.2D
PCIE_S_V/4.2D
CS0_SH_V/4.5D
PEX_S_V
PCIE_S_5V/4.2D
JX1_SE_0
JX1_SE_1
JX2_SE_0
JX2_SE_1
BANK13_SE_0
VP_0_P
VP_0_N
DXP_0_P
DXP_0_N
PEX_N_V
R11
JP1
T1
NX3008NBKT
N_IO0/6.4B
GND
PEX_S_V
SP1
KSSG23J12
R14
D1
R13
T2
S_IO0/6.4D
R12
AXIOM Beta Main Board [Test]
Power and Control Interface
axiom_beta_main_board_v0.29_test
12/14/21 6:56 PM
Sheet: 1/6
Copyright (C) 2014 H.Poetzl
Licensed under CERN OHL v.1.2

AXIOM Beta Main Board [Test]

ZYNQ LVDS Interface

axiom_beta_main_board_v0.29_test

12/14/21 6:56 PM

Sheet: 2/6

Copyright (C) 2014-2015 H.Poetzl
Licensed under CERN OHL v.1.2

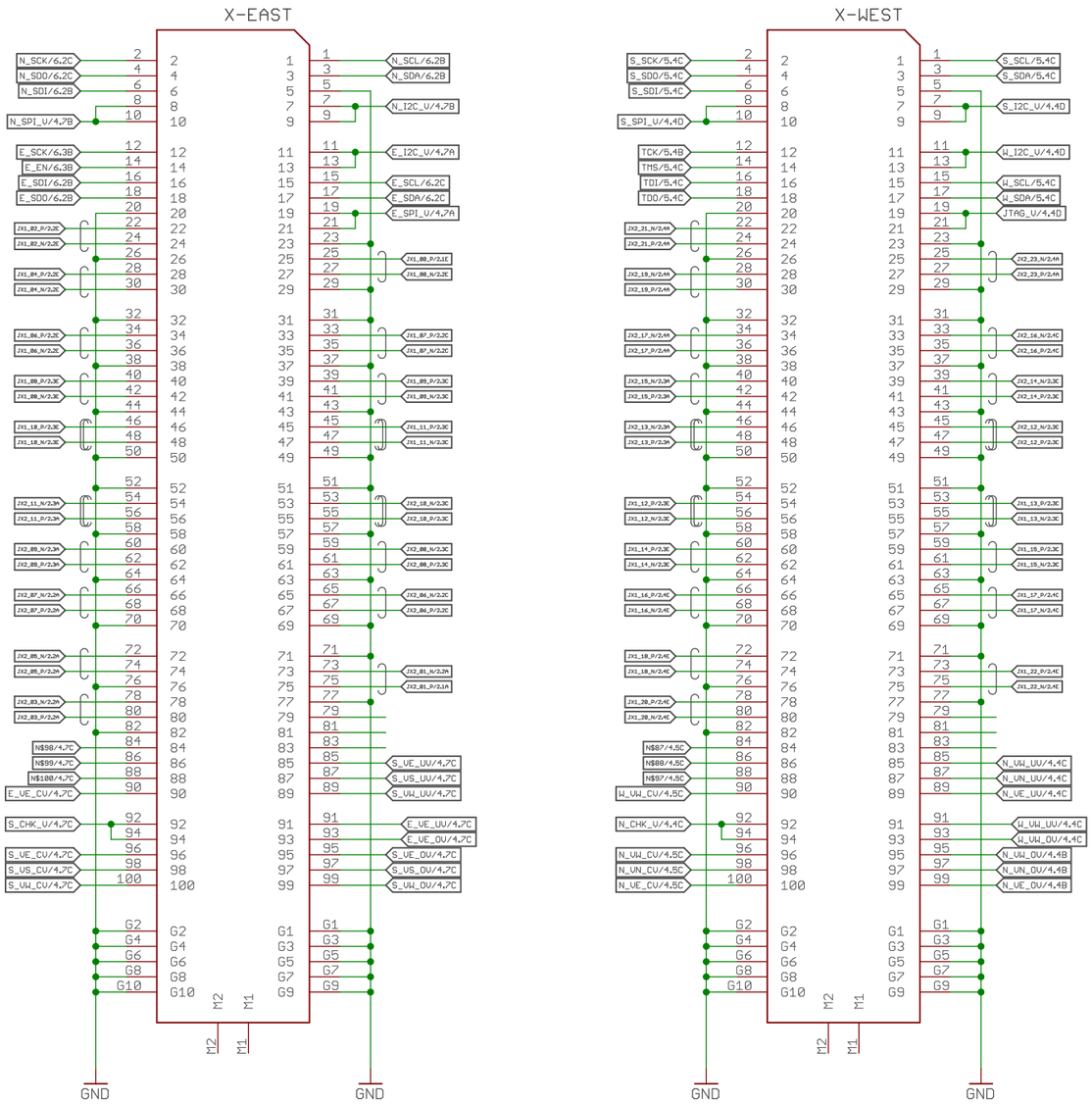

AXIOM Beta Main Board [Test]

Interface Board Connection

axiom_beta_main_board_v0.29_test

12/14/21 6:56 PM

Sheet: 3/6

Copyright (C) 2014-2015 H.Poetzl
Licensed under CERN OHL v.1.2

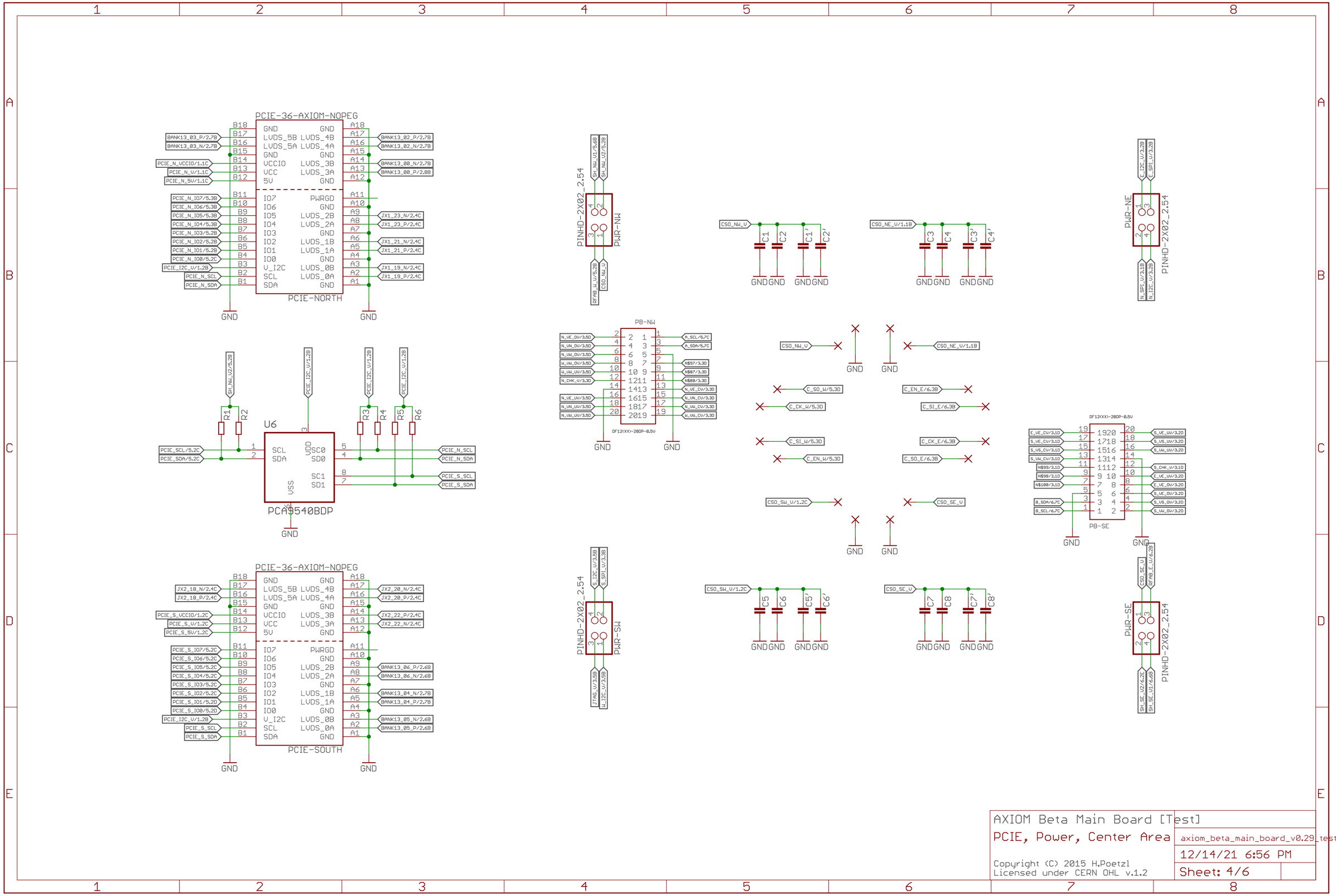

AXIOM Beta Main Board [Test]

PCIE, Power, Center Area

axiom_beta_main_board_v0.29_test

12/14/21 6:56 PM

Sheet: 4/6

Copyright (C) 2015 H.Poetzl
Licensed under CERN OHL v.1.2

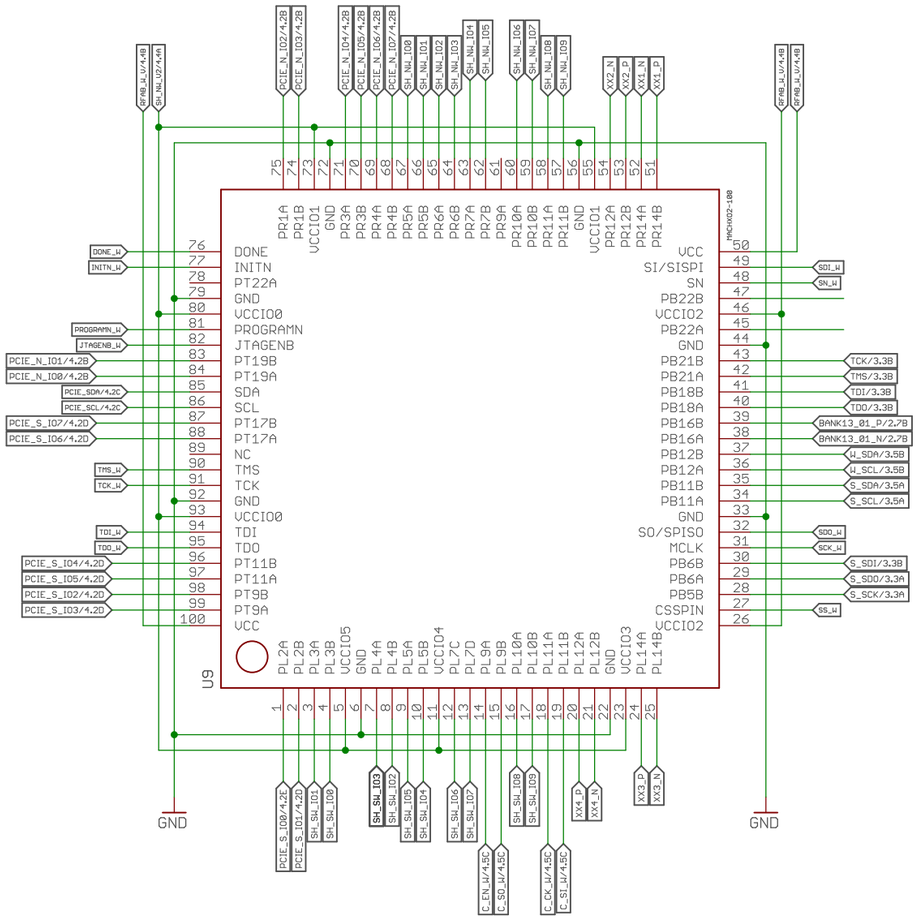

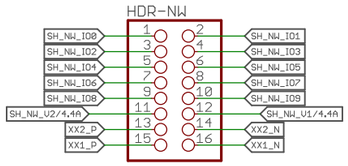

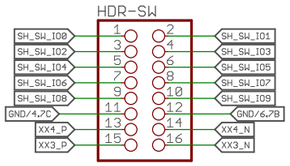

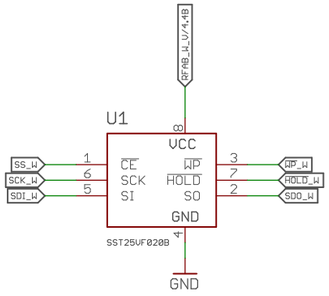

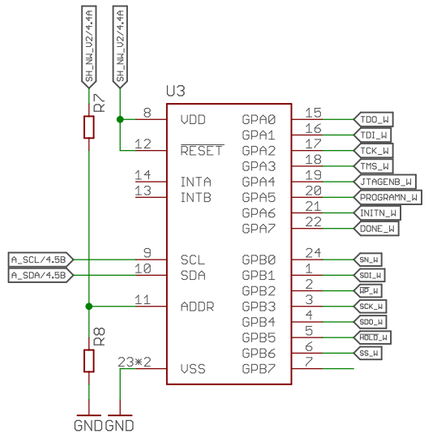

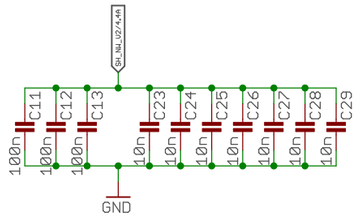

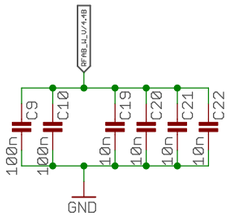

AXIOM Beta Main Board [Test]

Interface Fabric West

Copyright (C) 2015 H.Poetzl
Licensed under CERN OHL v.1.2

Sheet:

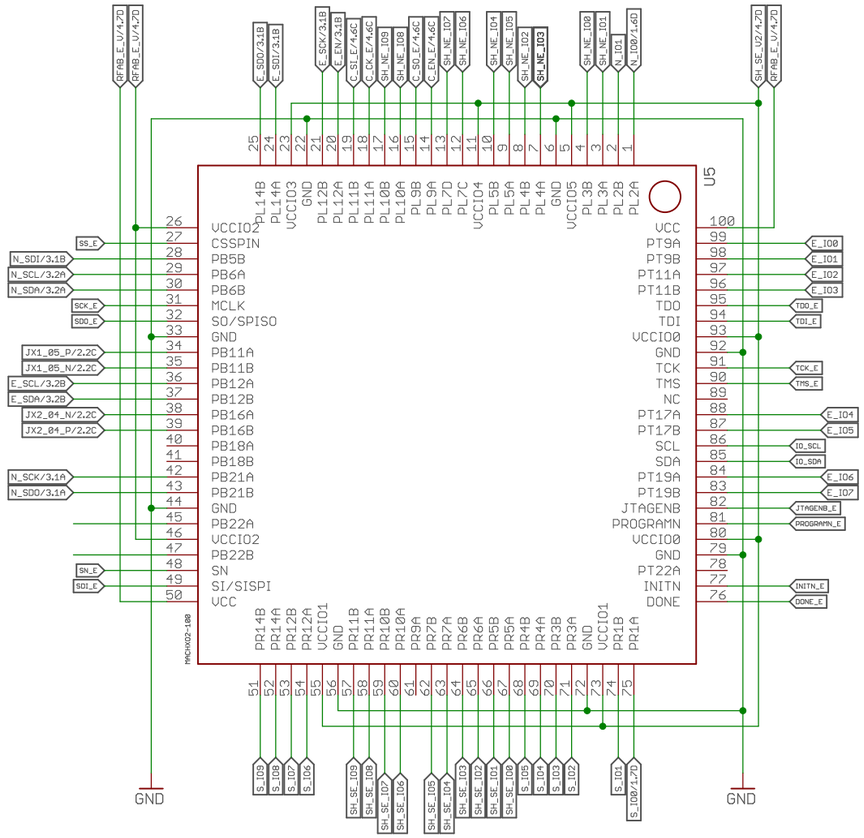

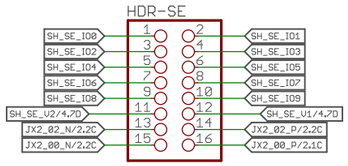

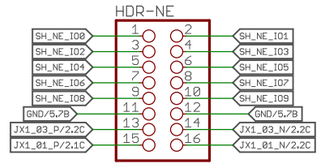

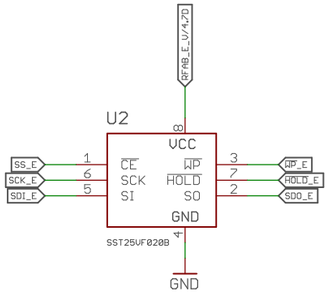

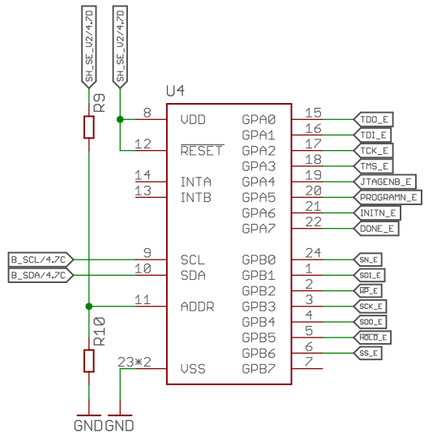

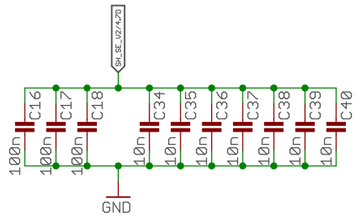

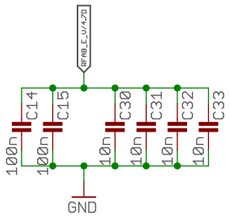

AXIOM Beta Main Board [Test]

Interface Fabric East

Copyright (C) 2015 H.Poetzl
Licensed under CERN OHL v.1.2

Sheet: