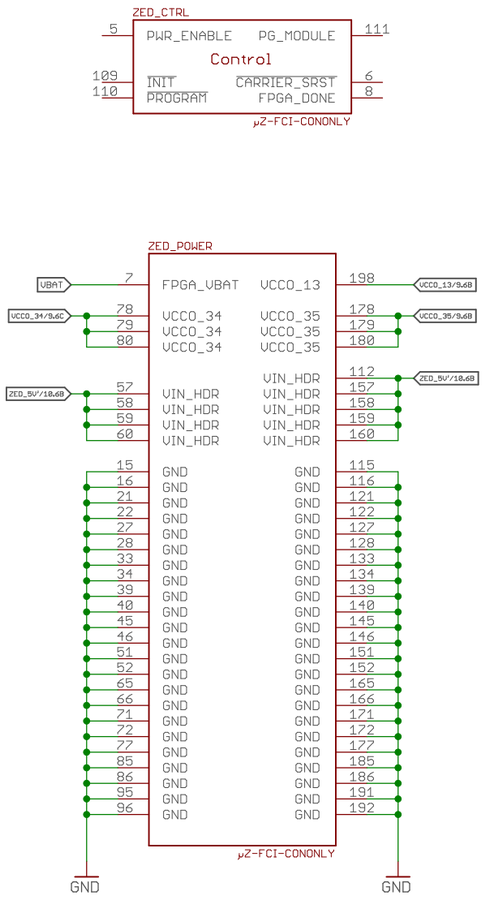

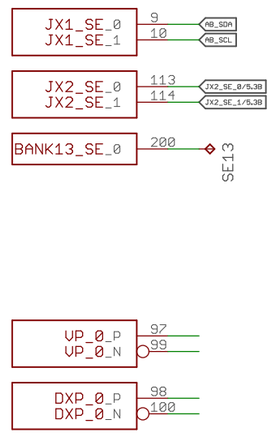

AXIOM Beta Test

MicroZed Power

axiom_beta_power_board_v0.9_test

12/14/21 6:59 PM

Sheet: 1/10

Copyright (C) 2014 H.Poetzl
Licensed under CERN OHL v.1.2

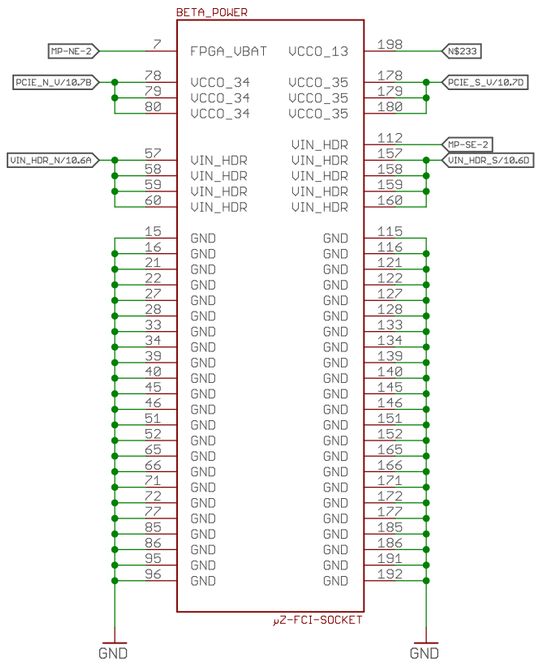

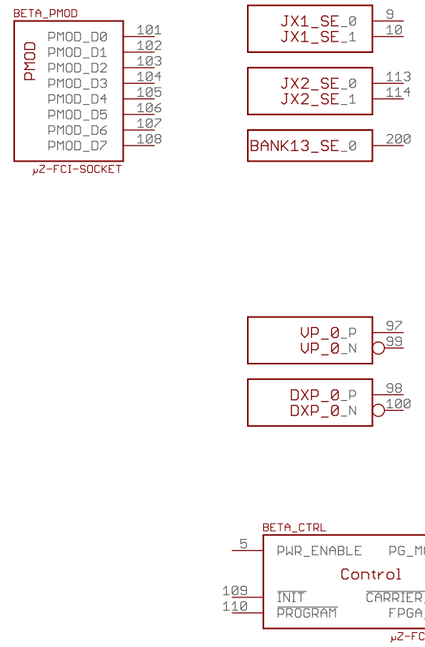

AXIOM Beta Test

Beta Power

Copyright (C) 2015 H.Poetzl
Licensed under CERN OHL v.1.2

axiom_beta_power_board_v0.9_test

12/14/21 6:59 PM

Sheet: 2/10

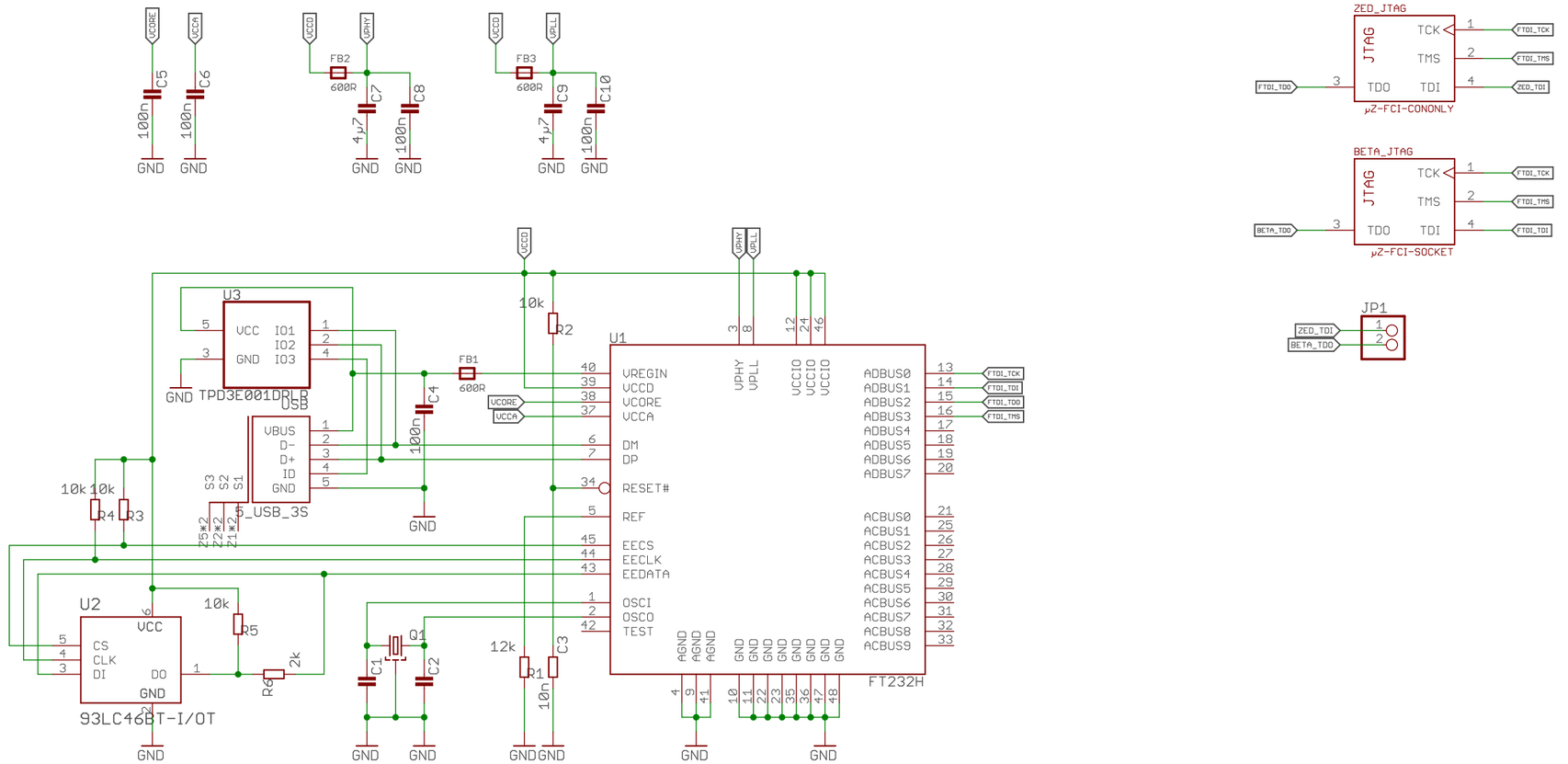

AXIOM Beta Test

FTDI Debug Interface

Copyright (C) 2014 H.Poetzl
Licensed under CERN OHL v.1.2

axiom_beta_power_board_v0.9_test

12/14/21 6:59 PM

Sheet: 3/10

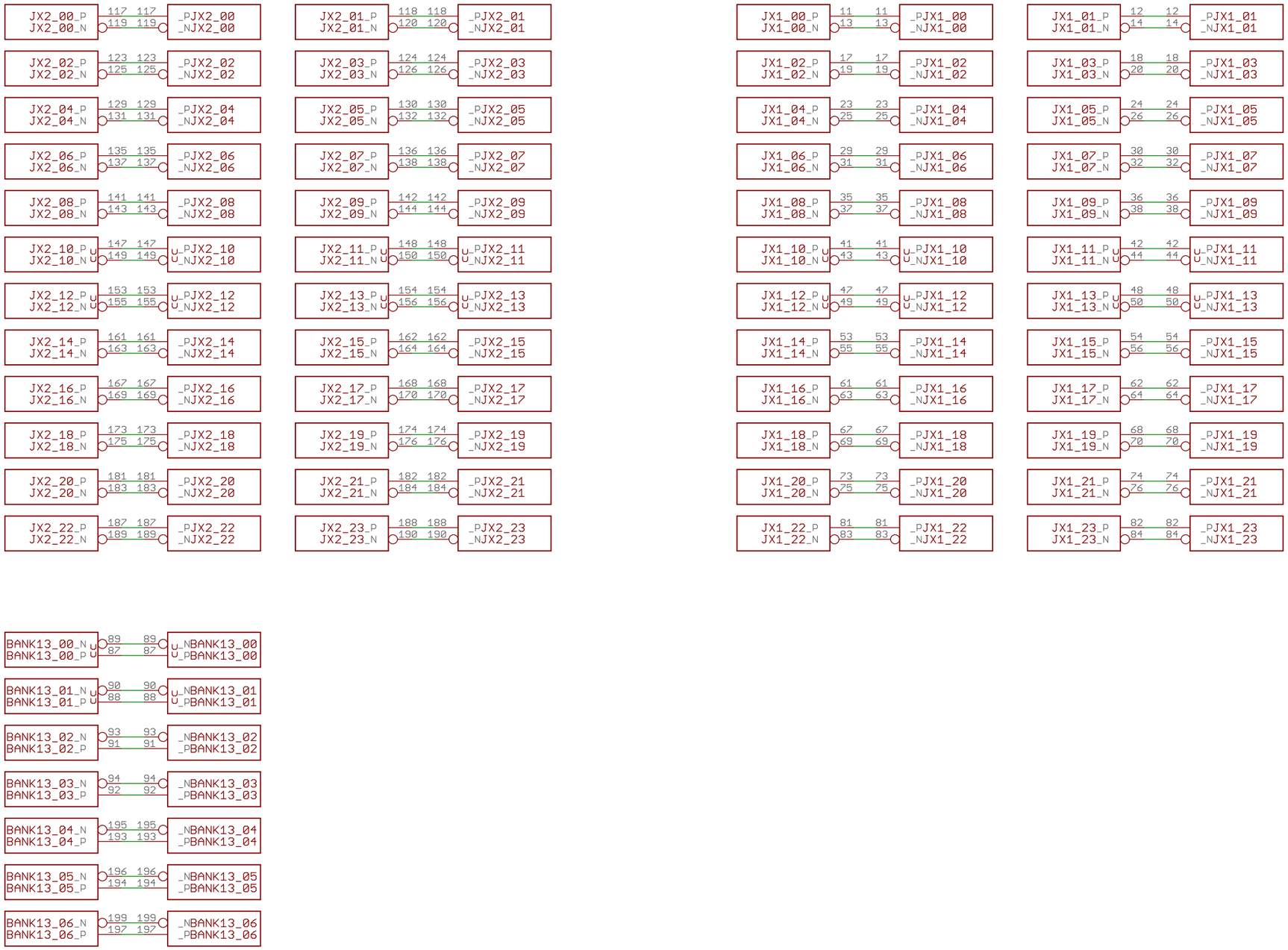

AXIOM Beta Test

LVDS Passthrough

Copyright (C) 2014 H.Poetzl
Licensed under CERN OHL v.1.2

axiom_beta_power_board_v0.9_test

12/14/21 6:59 PM

Sheet: 4/10

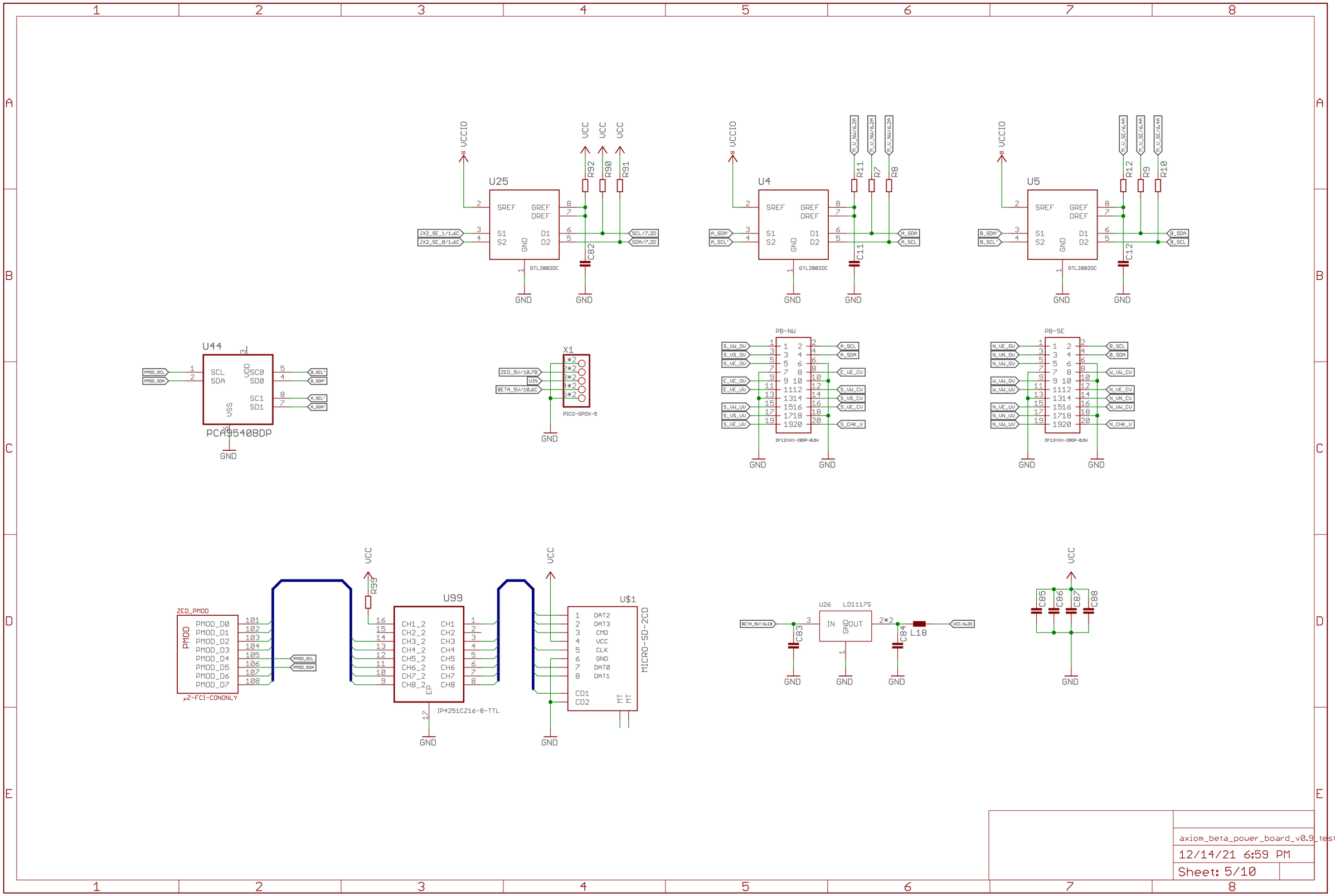

axiom_beta_power_board_v0.9_test

12/14/21 6:59 PM

Sheet: 5/10

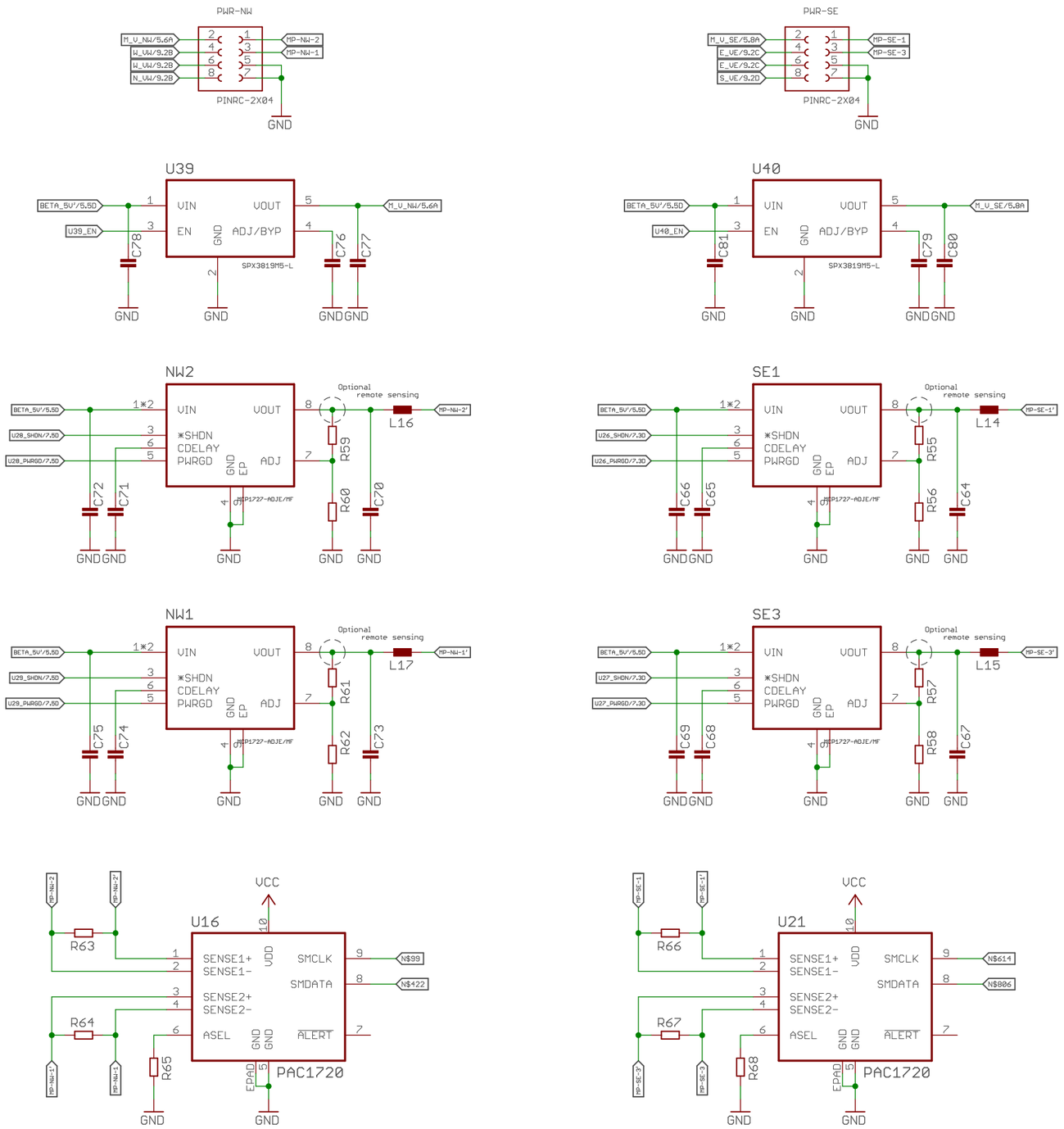

axiom_beta_power_board_v0.9_test

12/14/21 6:59 PM

Sheet: 6/10

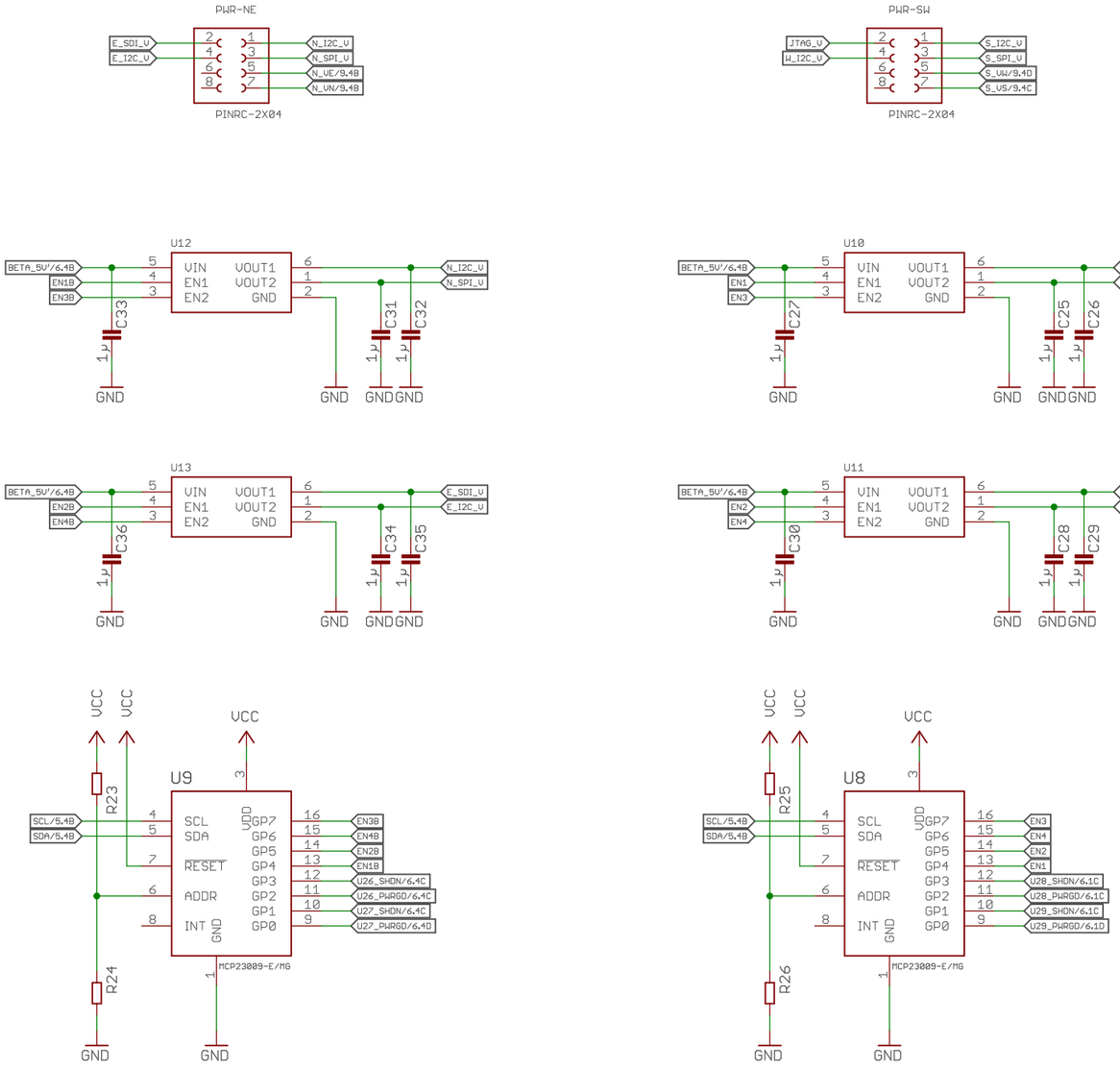

axiom_beta_power_board_v0.9_test

12/14/21 6:59 PM

Sheet: 7/10

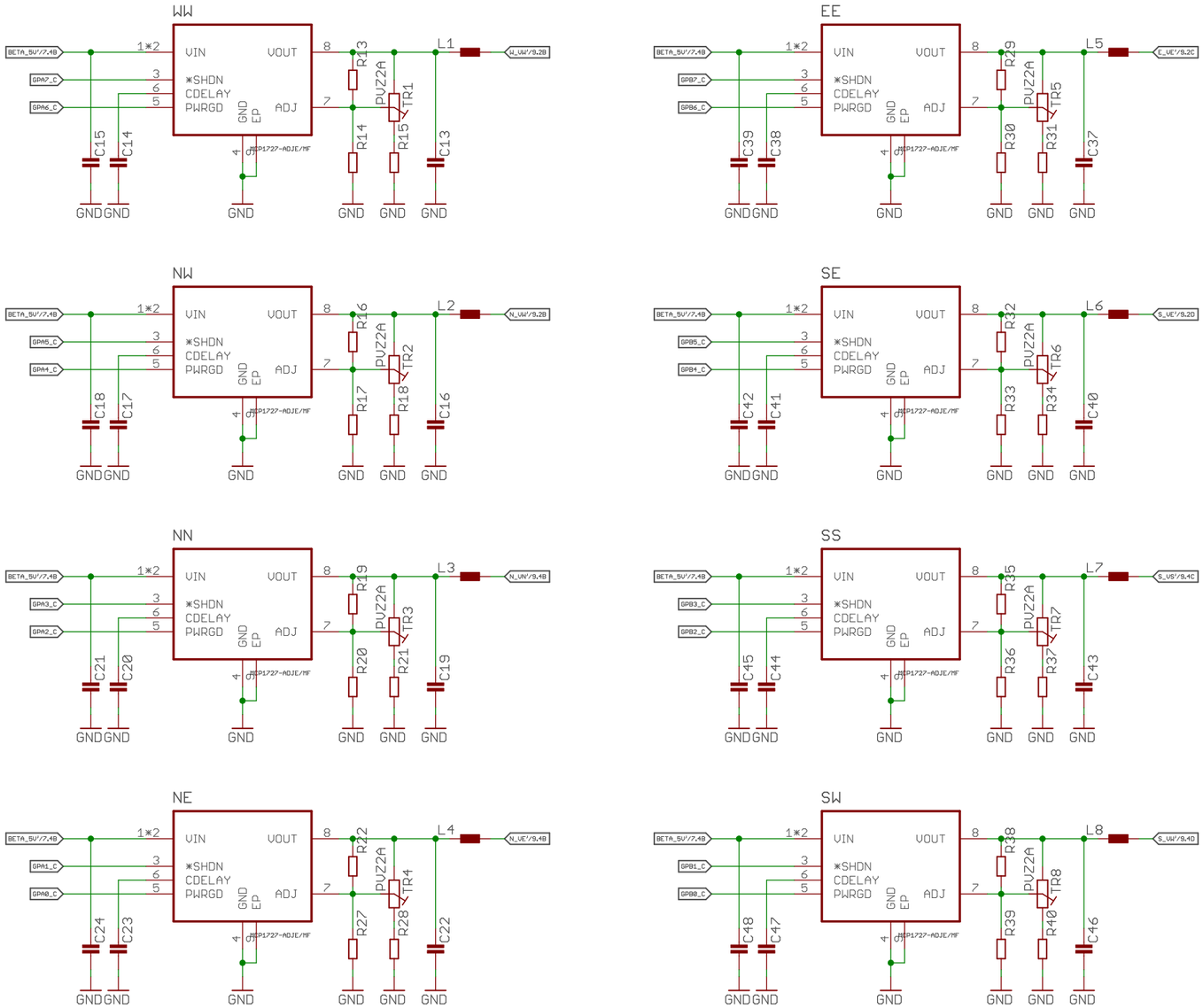

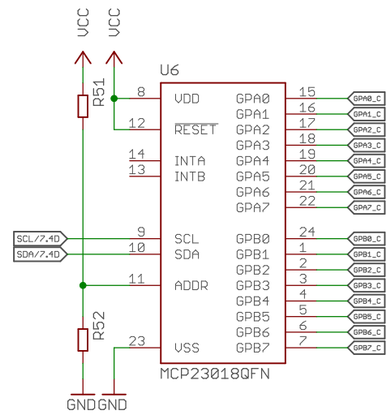

axiom_beta_power_board_v0.9_test

12/14/21 6:59 PM

Sheet: 8/10

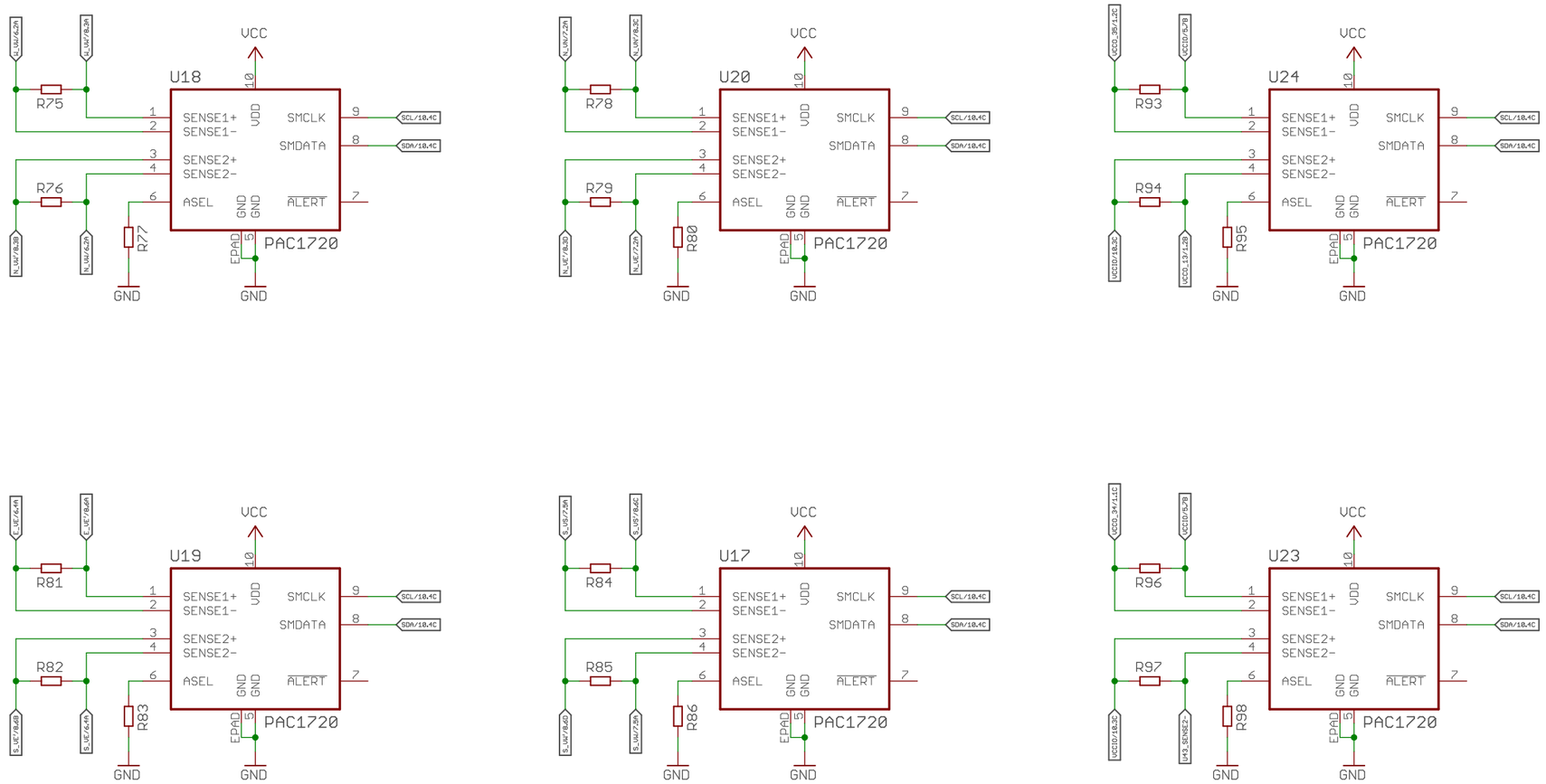

axiom_beta_power_board_v0.9_test

12/14/21 6:59 PM

Sheet: 9/10

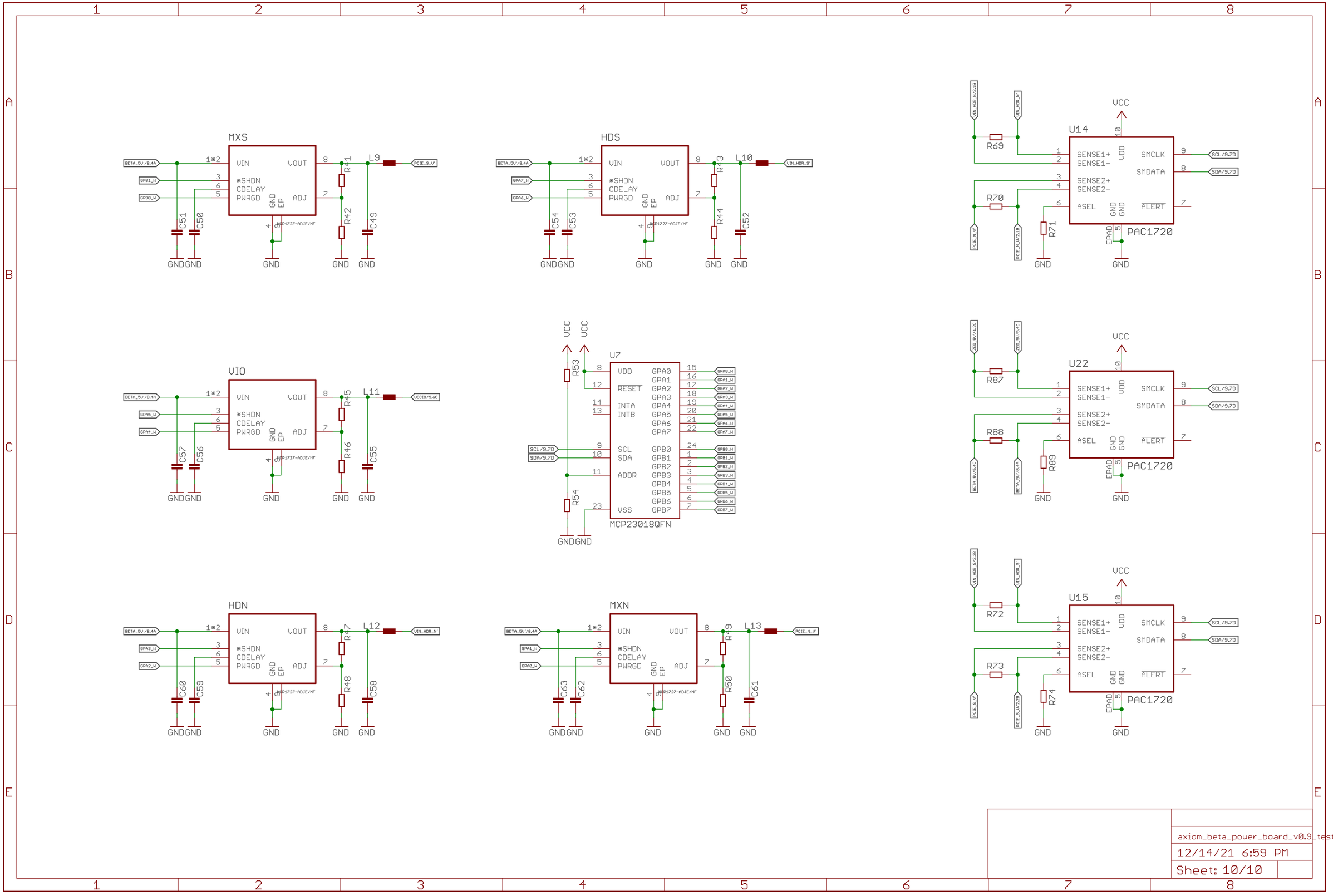
MXS
HDS
VIO
U7
MCP23018QFN
HDN
MXN
U14
U22
U15
PAC1720
VCC
axiom_beta_power_board_v0.9_test
12/14/21 6:59 PM
Sheet: 10/10