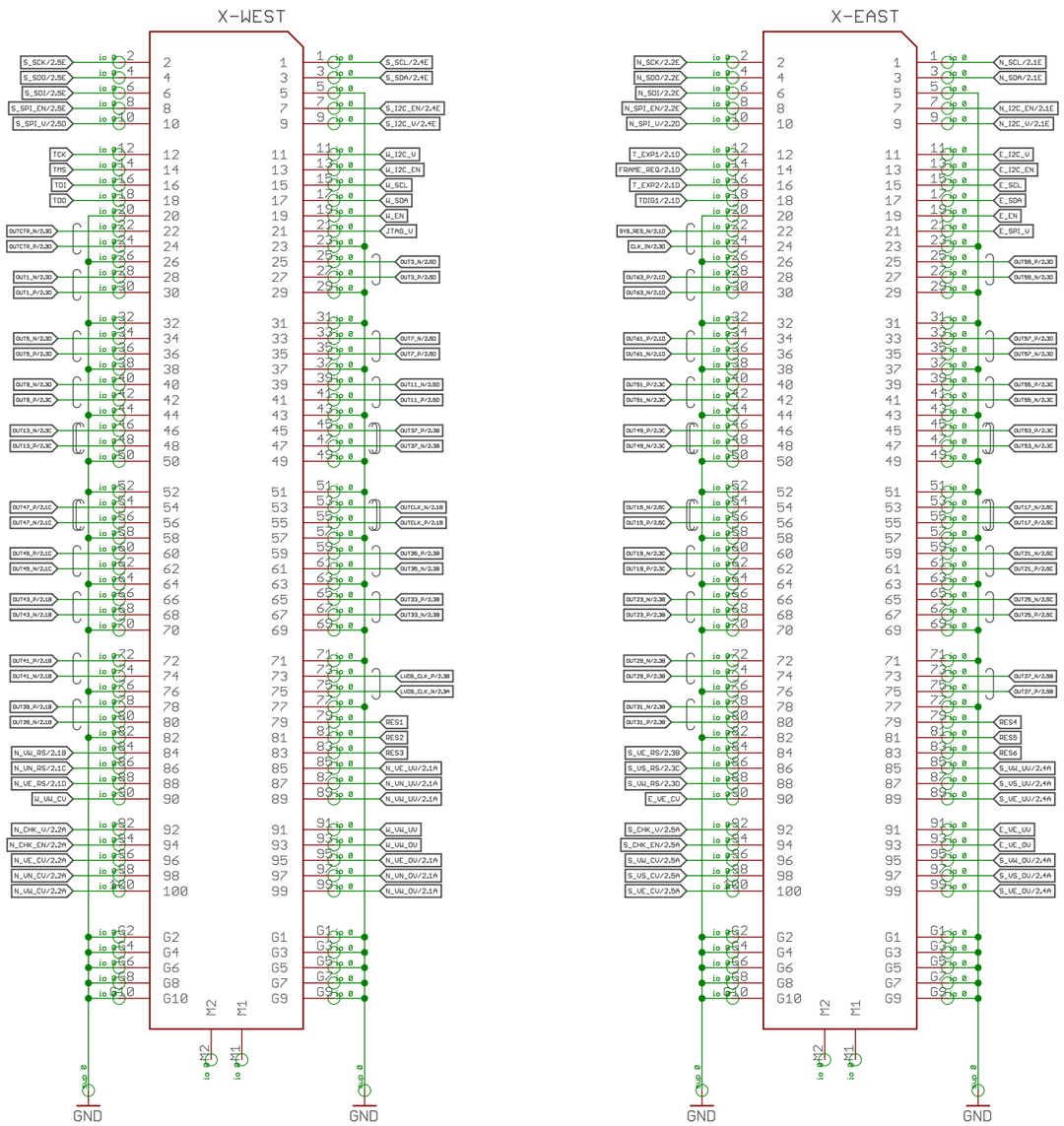

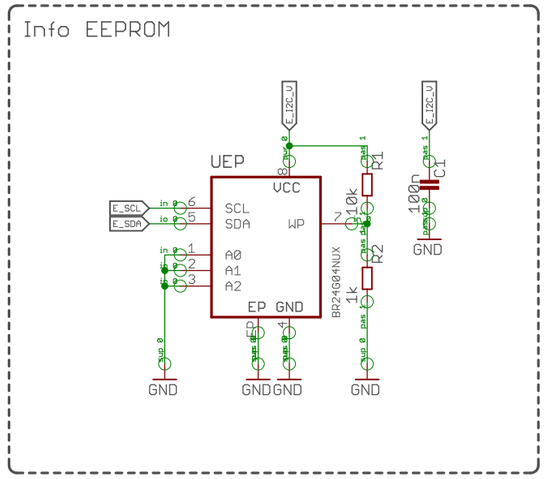

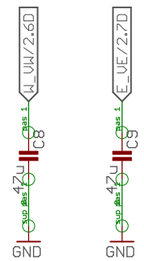

AXIOM Beta Dummy Interf.

Beta Board Interface

E_SPI_U assumed equal to LVDS

Copyright (C) 2014-2020 H.Poetzl
Licensed under CERN OHL v.1.2

axiom_beta_interface_dummy_v0.13_r1.6

12/14/21 6:56 PM

Sheet: 1/3

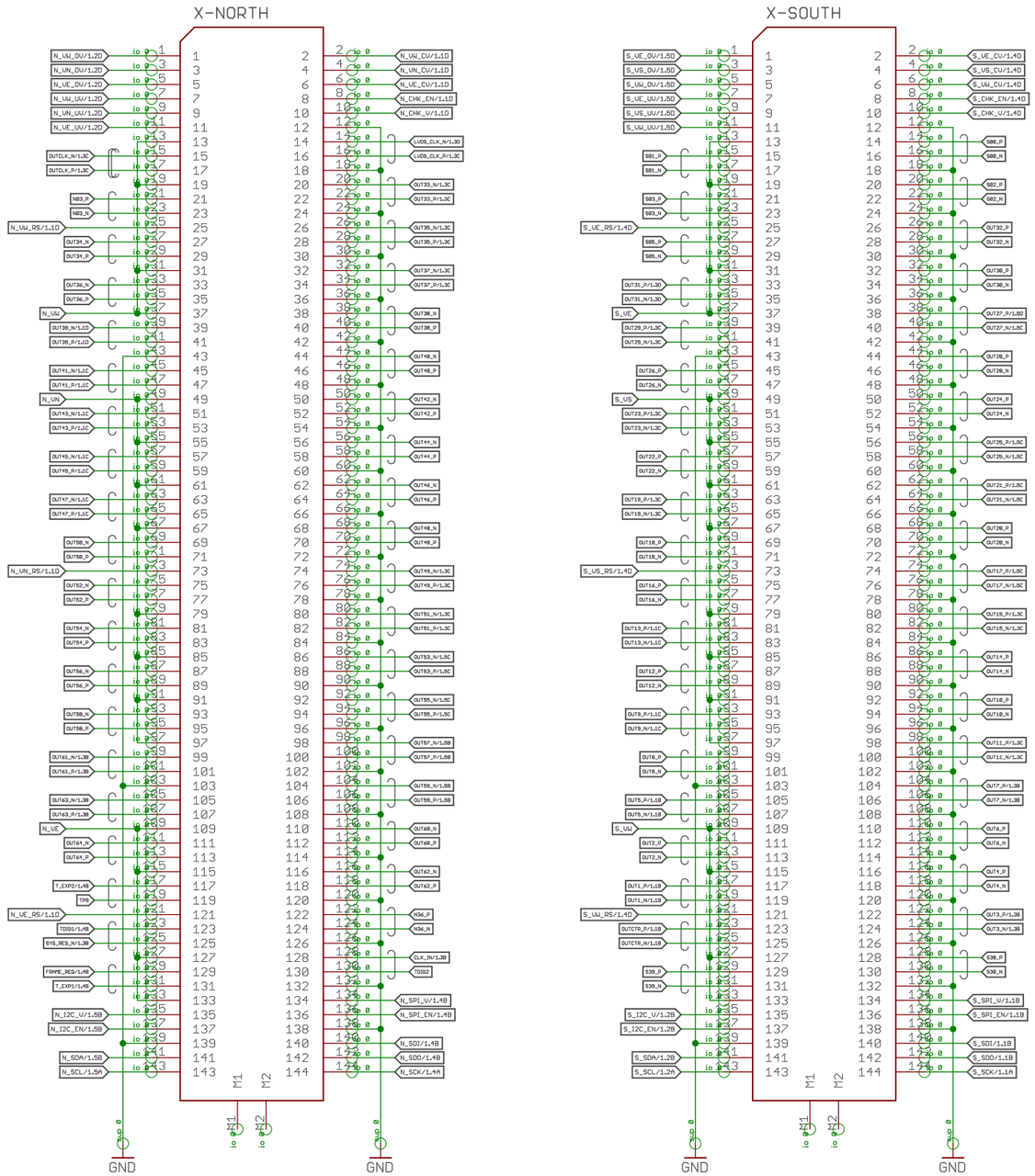

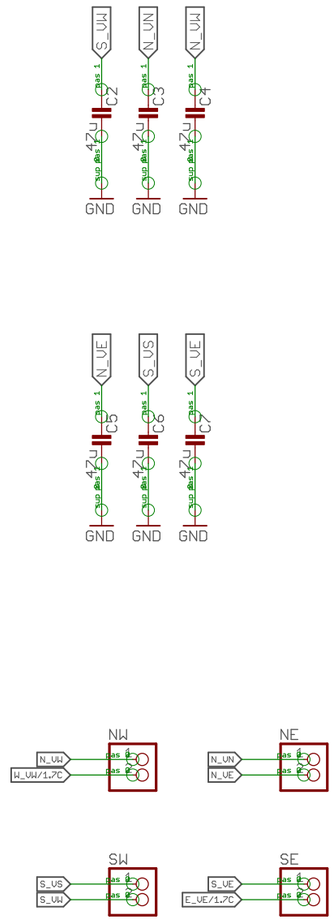

AXIOM Beta Dummy Interf.

CMV12000 Interface

32 LVDS channels (16/16) con.

Copyright (C) 2014-2020 H.Poetzl
Licensed under CERN OHL v.1.2

axiom_beta_interface_dummy_v0.13_r1.6

12/14/21 6:56 PM

Sheet: 2/3

FID1
FIDUCIAL

FID2
FIDUCIAL

FID3
FIDUCIAL

FID4
FIDUCIAL

FID5
FIDUCIAL-3A

FID6
FIDUCIAL-3A

FID7
FIDUCIAL-3A

FID8
FIDUCIAL-3A

AXIOM Beta Dummy Interf.
Fiducials

Copyright (C) 2014-2020 H.Poetzl
Licensed under CERN OHL v.1.2

axiom_beta_interface_dummy_v0.13_r1.6
12/14/21 6:56 PM
Sheet: 3/3