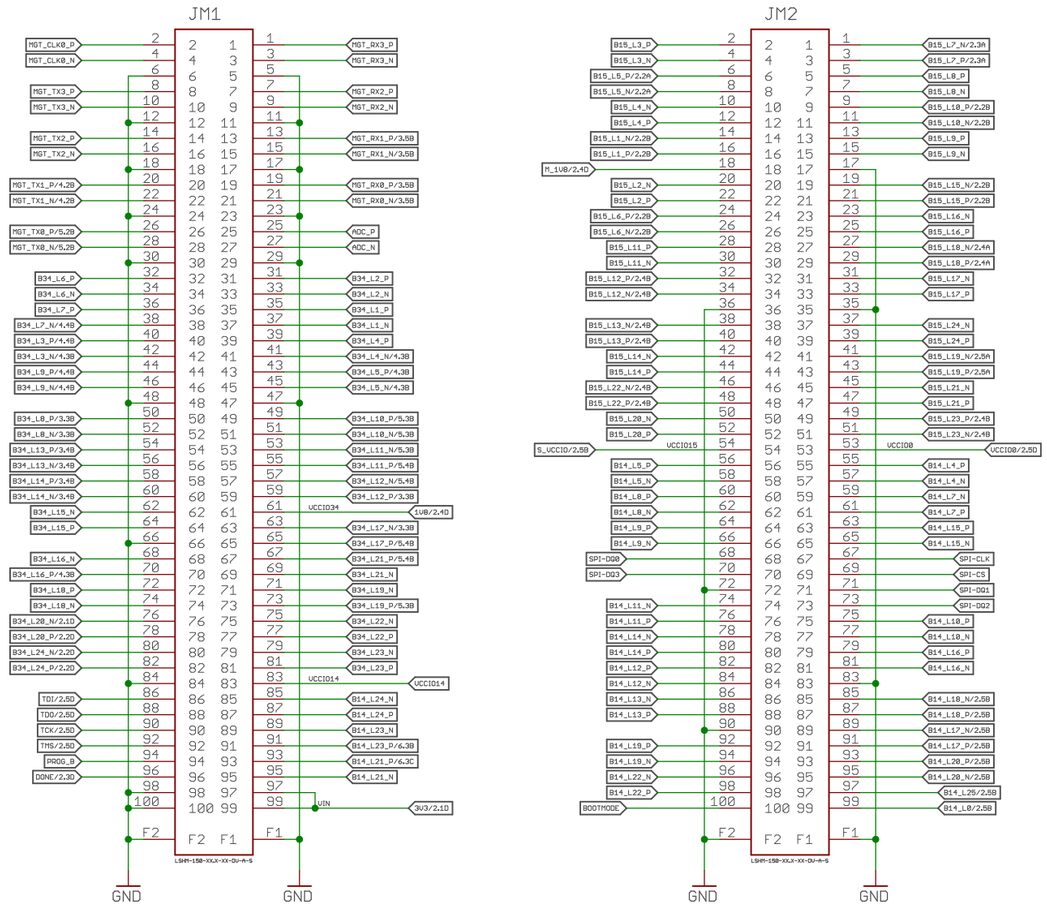

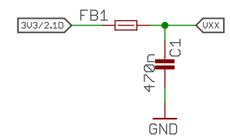

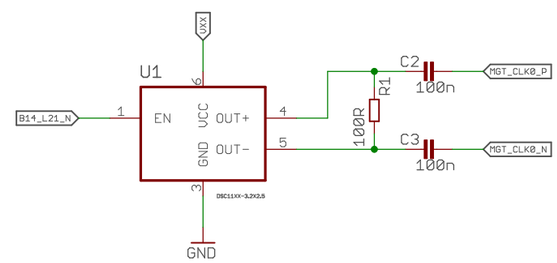

AXIOM Beta Module

Trenz SDI Plugin Module

Copyright (C) 2017 H.Poetzl
Licensed under CERN OHL v.1.2

axiom_beta_plugin_module_TE0714_SDI_v0.8

17 Dec 2021 03:56:26

Sheet: 1/6

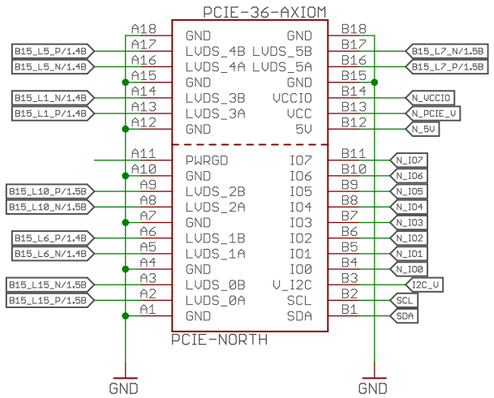

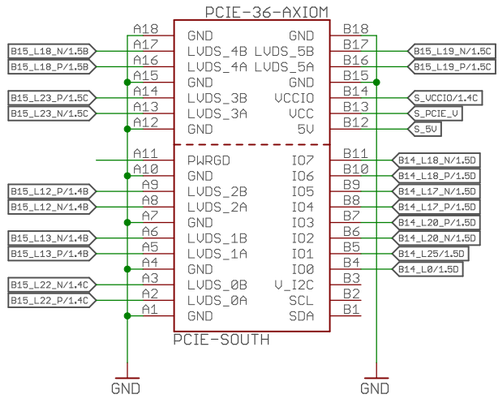

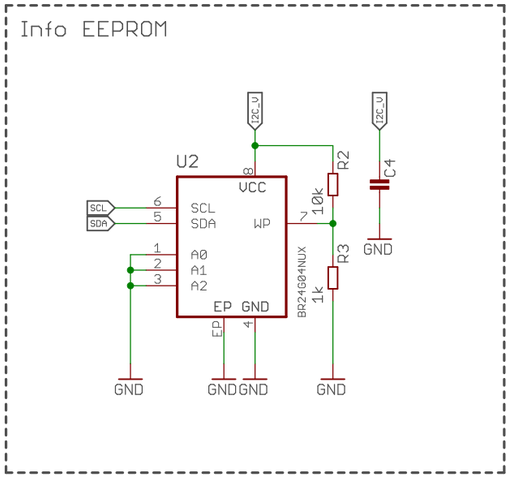

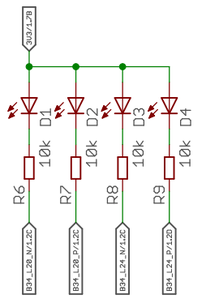

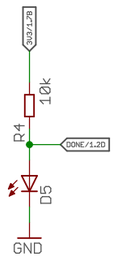

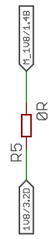

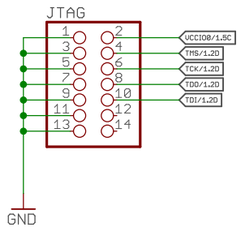

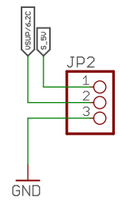

AXIOM Beta Module

Trenz SDI Plugin Module

axiom_beta_plugin_module_TE0714_SDI_v0.8

17 Dec 2021 03:56:26

Sheet: 2/6

Copyright (C) 2017 H.Poetzl
Licensed under CERN OHL v.1.2

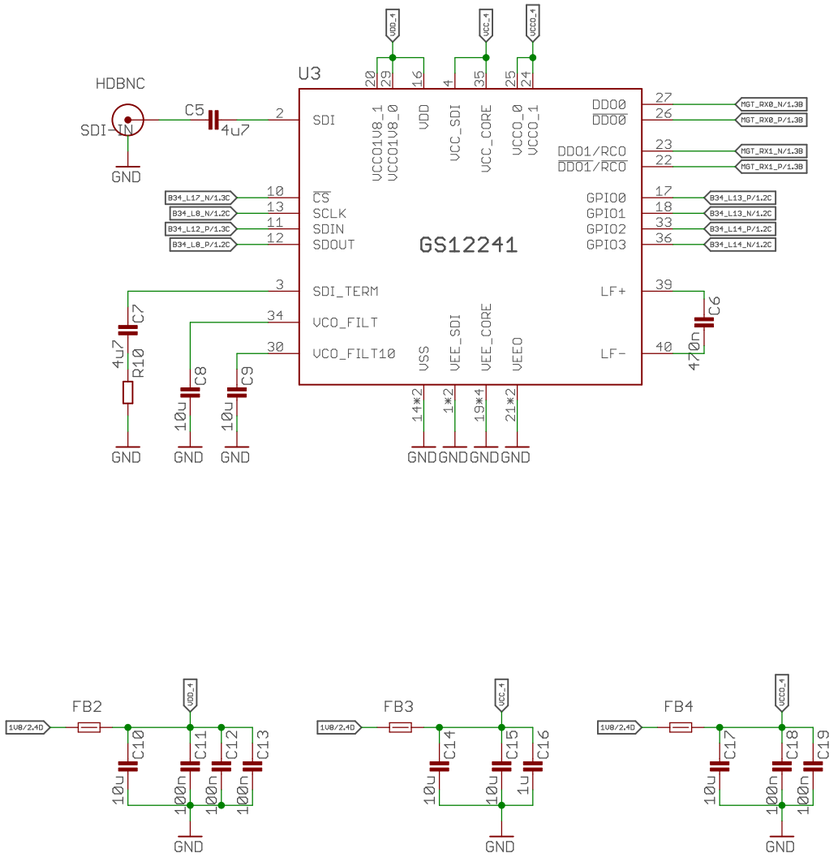

AXIOM Beta Module

Trenz SDI Plugin Module

axiom_beta_plugin_module_TE0714_SDI_v0.8

17 Dec 2021 03:56:26

Sheet: 3/6

Copyright (C) 2017 H.Poetzl
Licensed under CERN OHL v.1.2

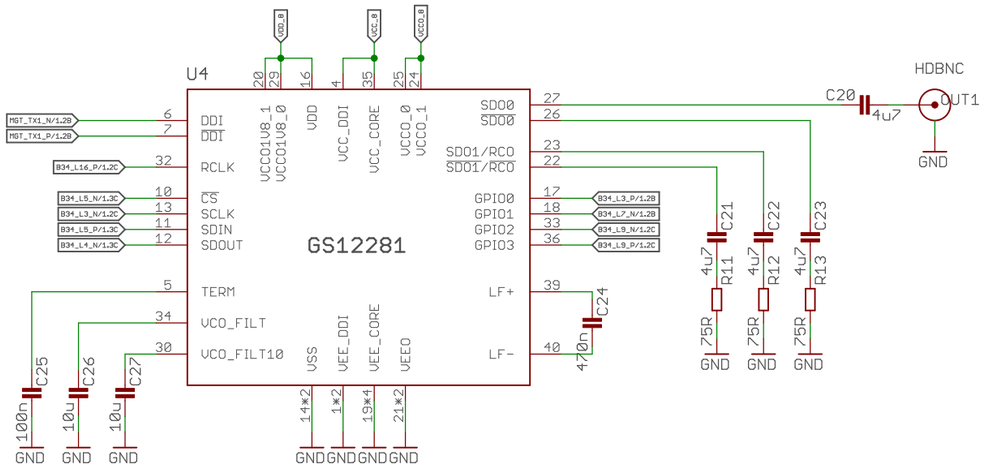

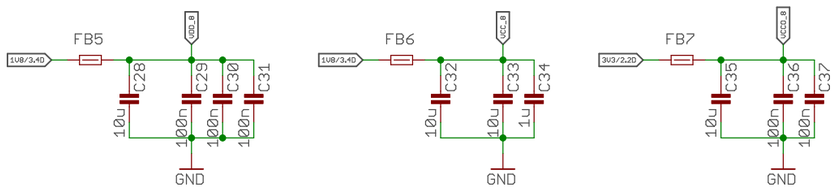

AXIOM Beta Module

Trenz SDI Plugin Module

Copyright (C) 2017 H.Poetzl
Licensed under CERN OHL v.1.2

axiom_beta_plugin_module_TE0714_SDI_v0.8

17 Dec 2021 03:56:26

Sheet: 4/6

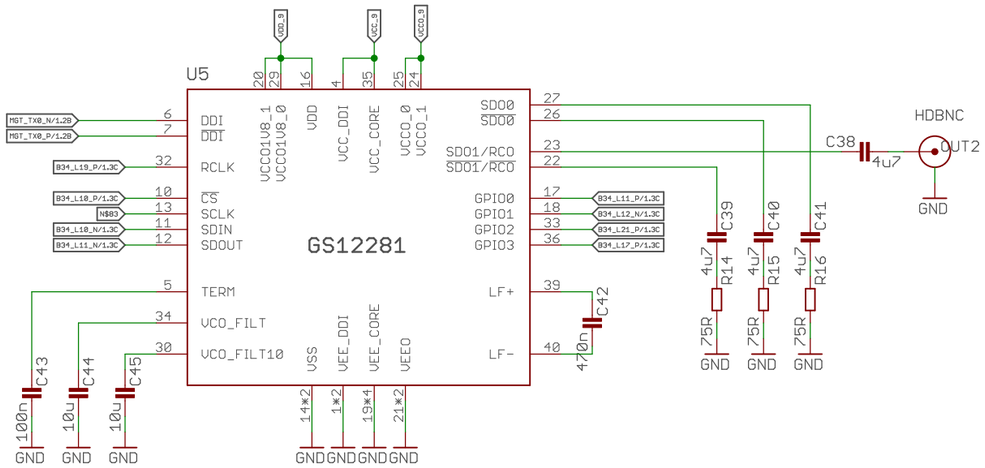

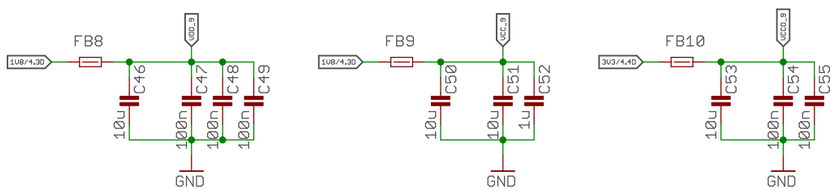

AXIOM Beta Module

Trenz SDI Plugin Module

axiom_beta_plugin_module_TE0714_SDI_v0.8

17 Dec 2021 03:56:26

Sheet: 5/6

Copyright (C) 2017 H.Poetzl
Licensed under CERN OHL v.1.2

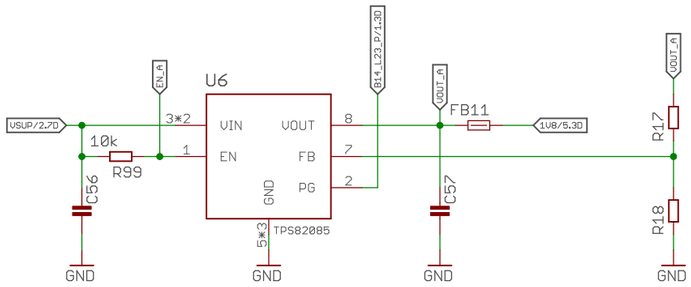

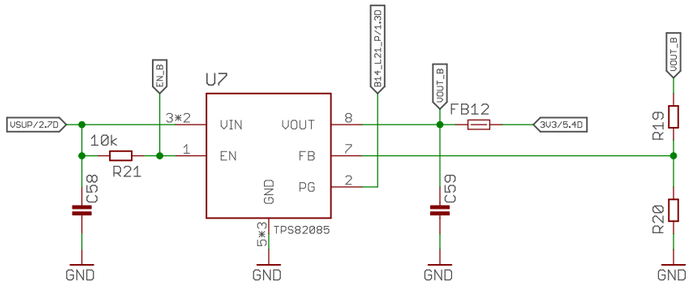

AXIOM Beta Module
Trenz SDI Plugin Module

Copyright (C) 2017 H.Poetzl
Licensed under CERN OHL v.1.2

axiom_beta_plugin_module_TE0714_SDI_v0.8
17 Dec 2021 03:56:26
Sheet: 6/6