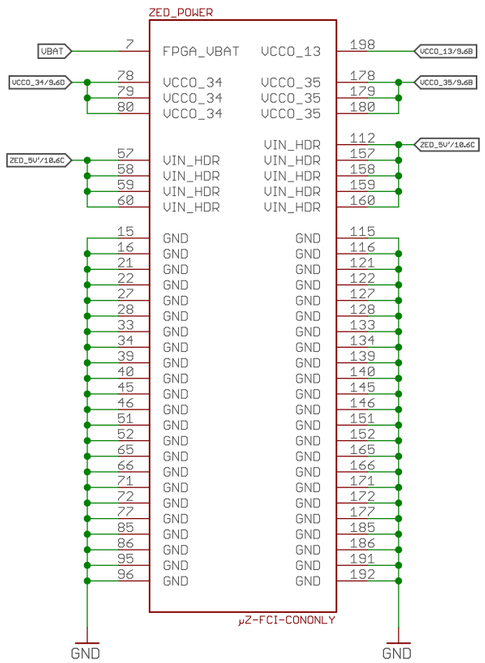

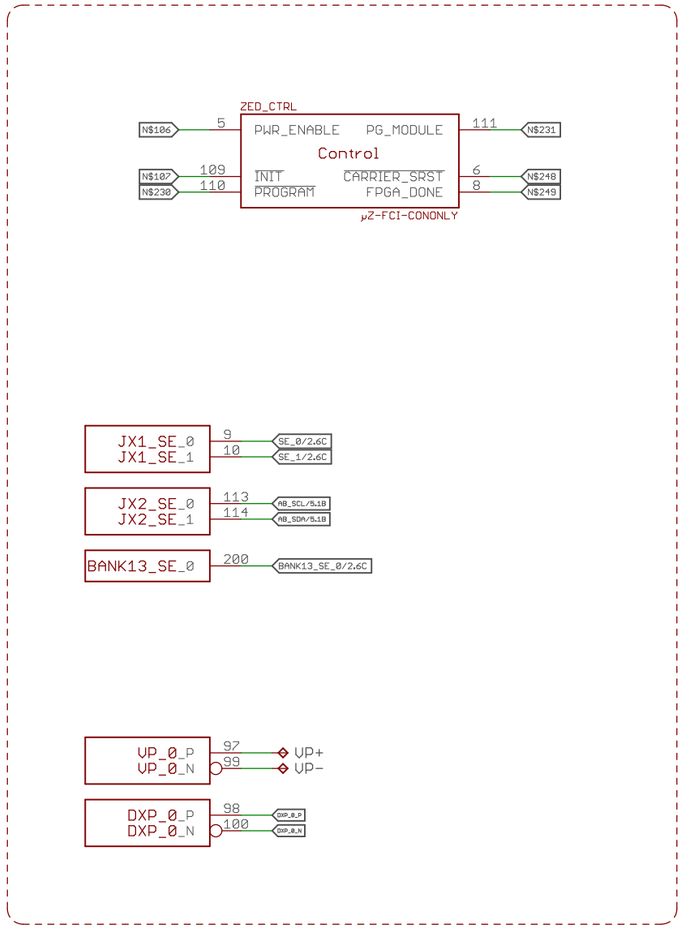

AXIOM Beta Test

MicroZed Power

axiom_beta_power_board_v0.17_test

12/14/21 6:57 PM

Sheet: 1/10

Copyright (C) 2014-2015 H.Poetzl
Licensed under CERN OHL v.1.2

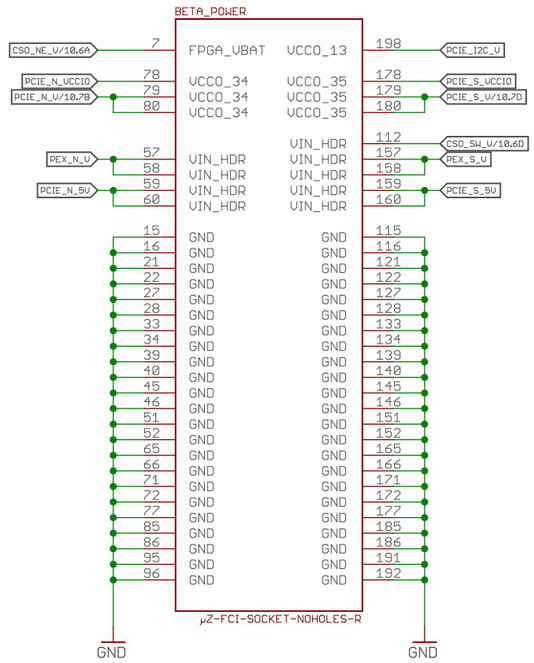

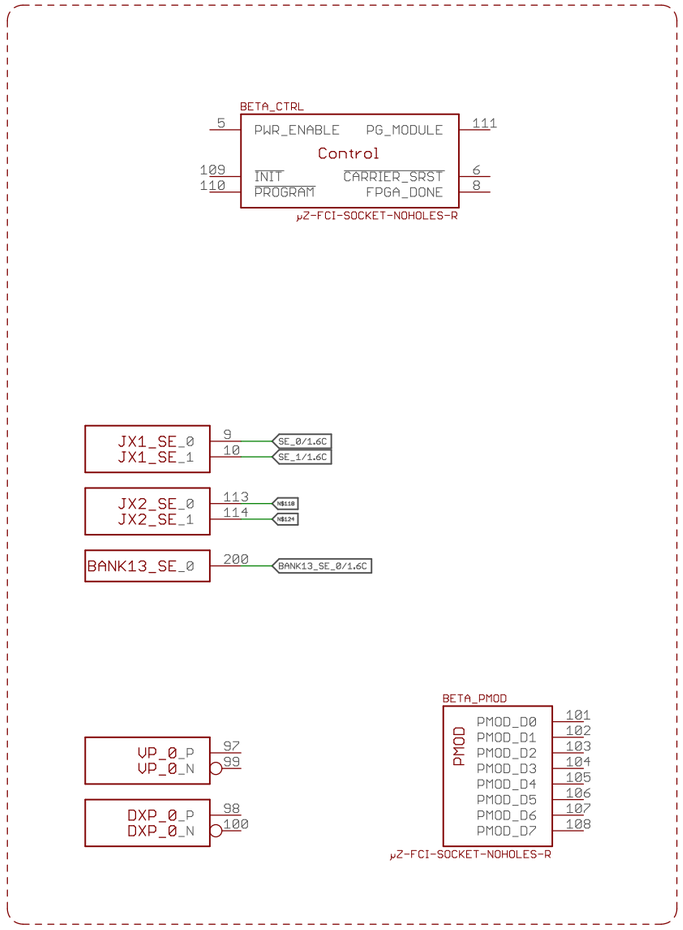

AXIOM Beta Test

Beta Main Board Power

axiom_beta_power_board_v0.17_test

12/14/21 6:57 PM

Copyright (C) 2014-2015 H.Poetzl
Licensed under CERN OHL v.1.2

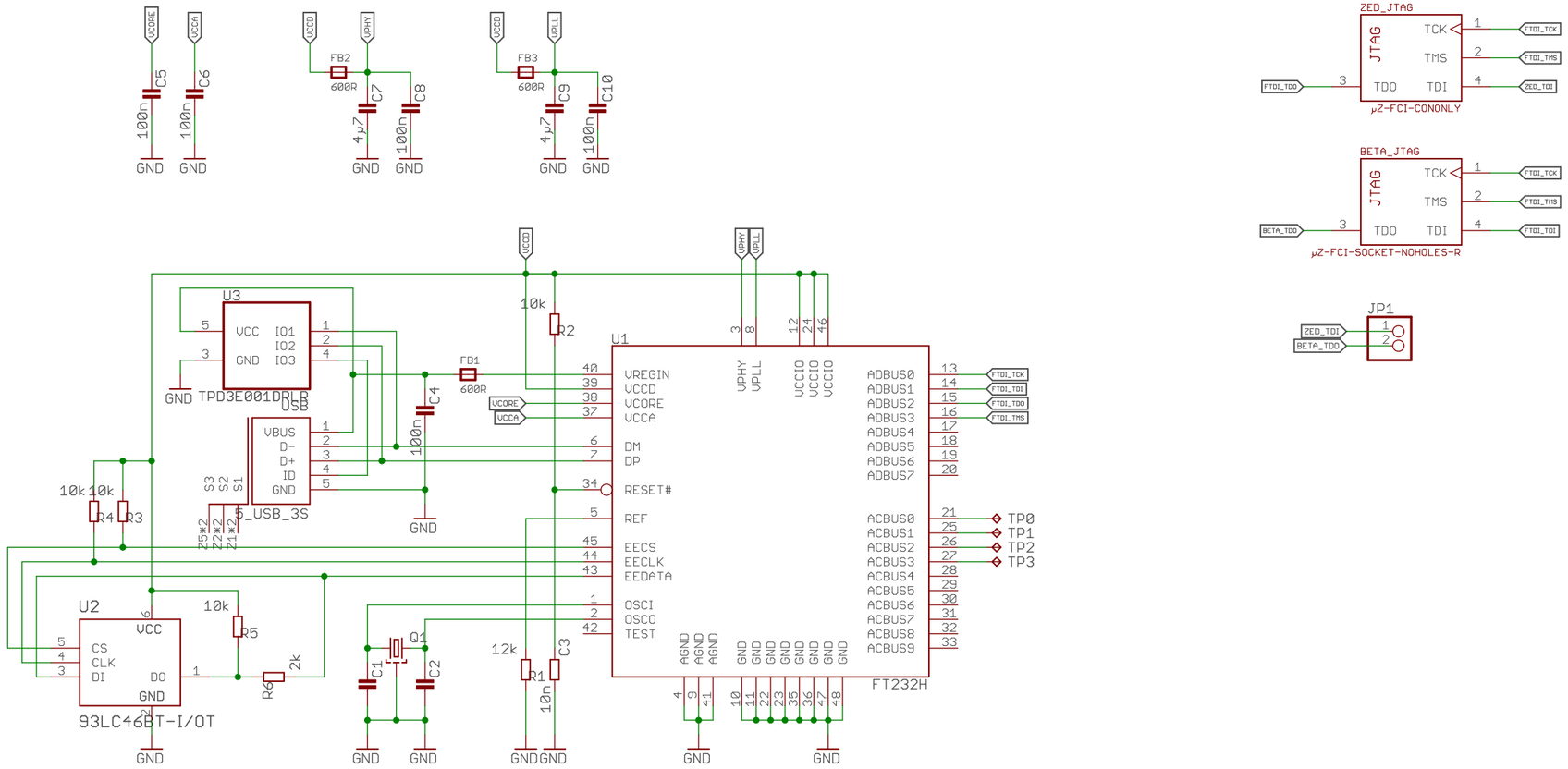

AXIOM Beta Test

FTDI Debug Interface

axiom_beta_power_board_v0.17_test

12/14/21 6:57 PM

Sheet: 3/10

Copyright (C) 2014-2015 H.Poetzl
Licensed under CERN OHL v.1.2

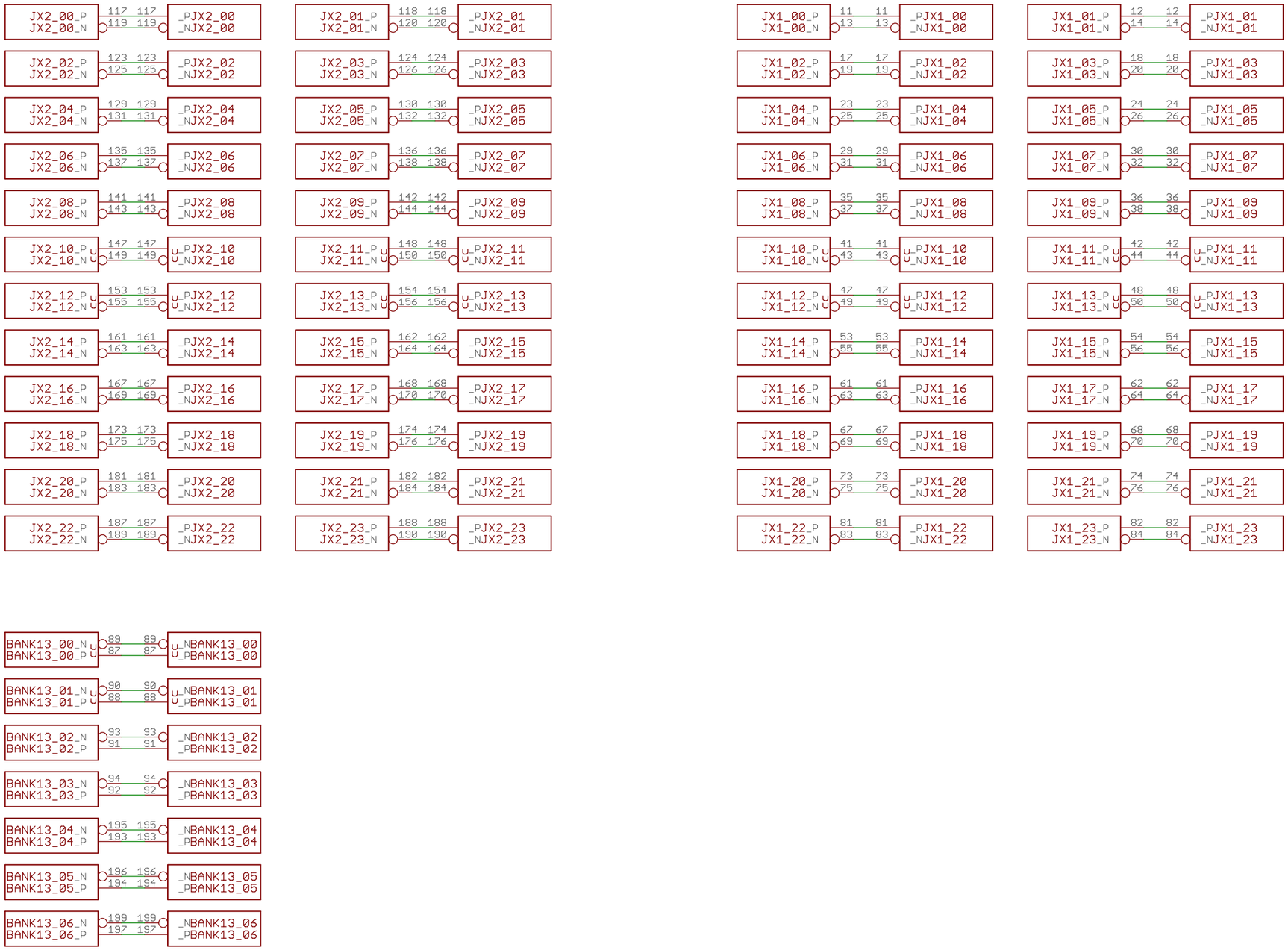

AXIOM Beta Test

LVDS Passthrough

Copyright (C) 2015 H.Poetzl
Licensed under CERN OHL v.1.2

axiom_beta_power_board_v0.17_test

12/14/21 6:57 PM

Sheet: 4/10

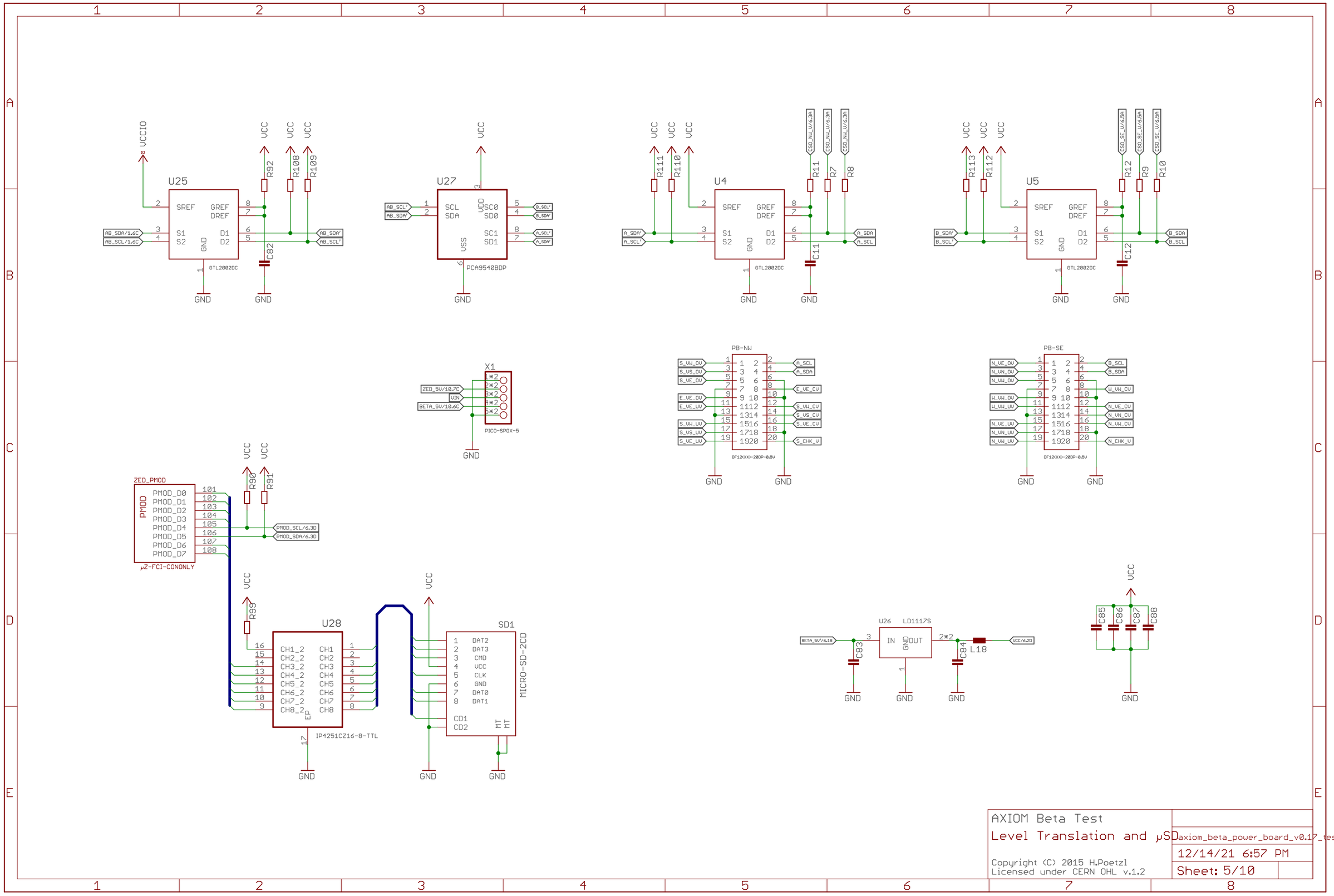

AXIOM Beta Test

Level Translation and µSD

Copyright (C) 2015 H.Poetzl
Licensed under CERN OHL v.1.2

axiom_beta_power_board_v0.17_test

12/14/21 6:57 PM

Sheet: 5/10

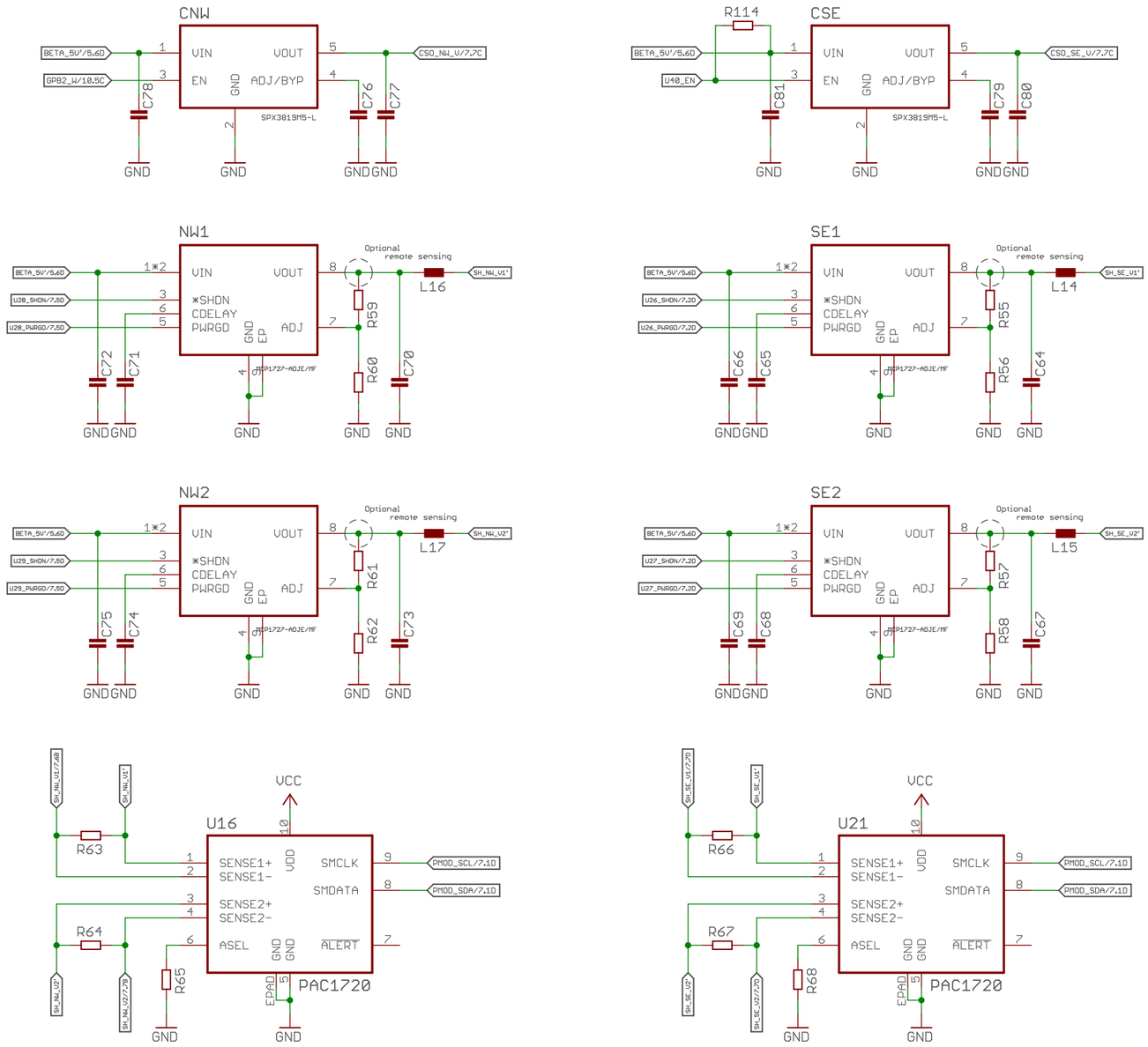

AXIOM Beta Test

Shield Power and Sensing

axiom_beta_power_board_v0.17_test

12/14/21 6:57 PM

Sheet: 6/10

Copyright (C) 2015 H.Poetzl
Licensed under CERN OHL v.1.2

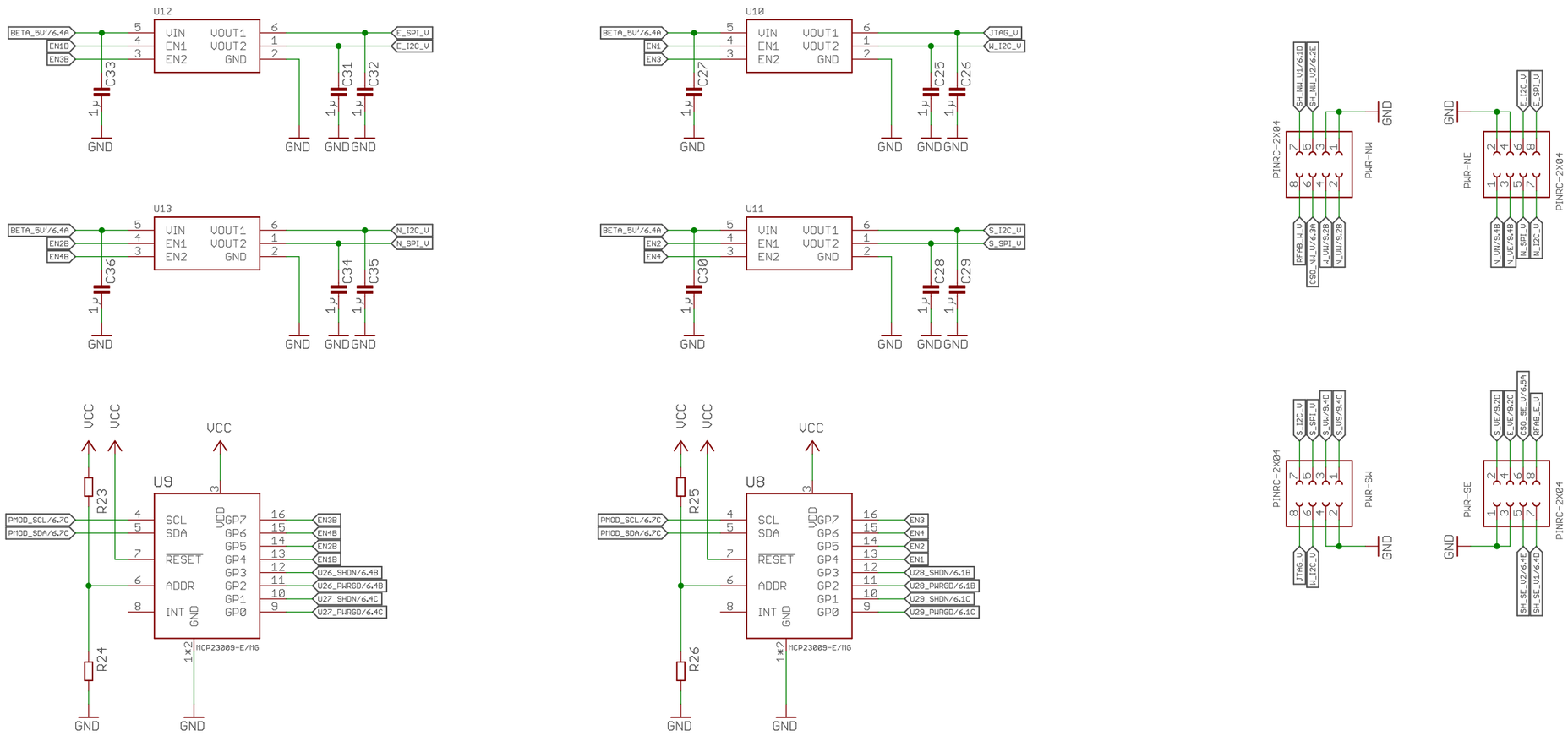

AXIOM Beta Test

Interface Power and Control

axiom_beta_power_board_v0.17_test

12/14/21 6:57 PM

Sheet: 7/10

Copyright (C) 2015 H.Poetzl
Licensed under CERN OHL v.1.2

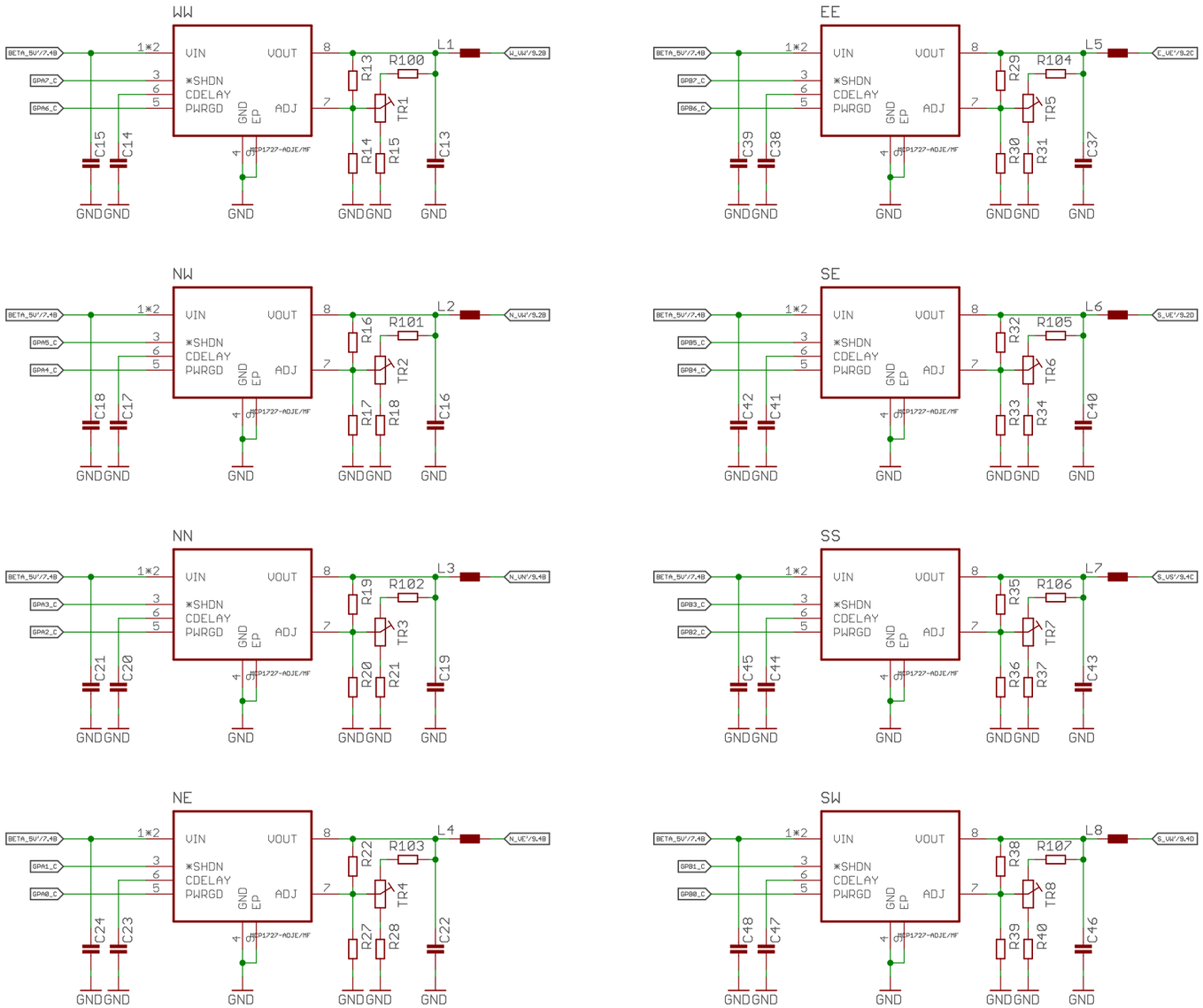

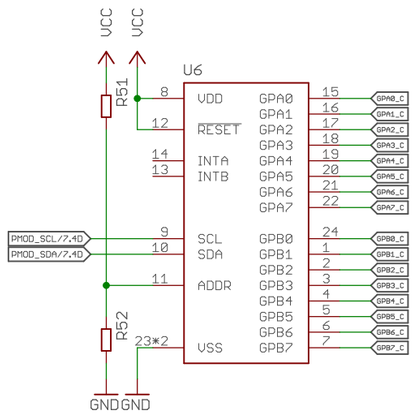

AXIOM Beta Test

Sensor Power and Control

axiom_beta_power_board_v0.17_test

12/14/21 6:57 PM

Sheet: 8/10

Copyright (C) 2015 H.Poetzl
Licensed under CERN OHL v.1.2

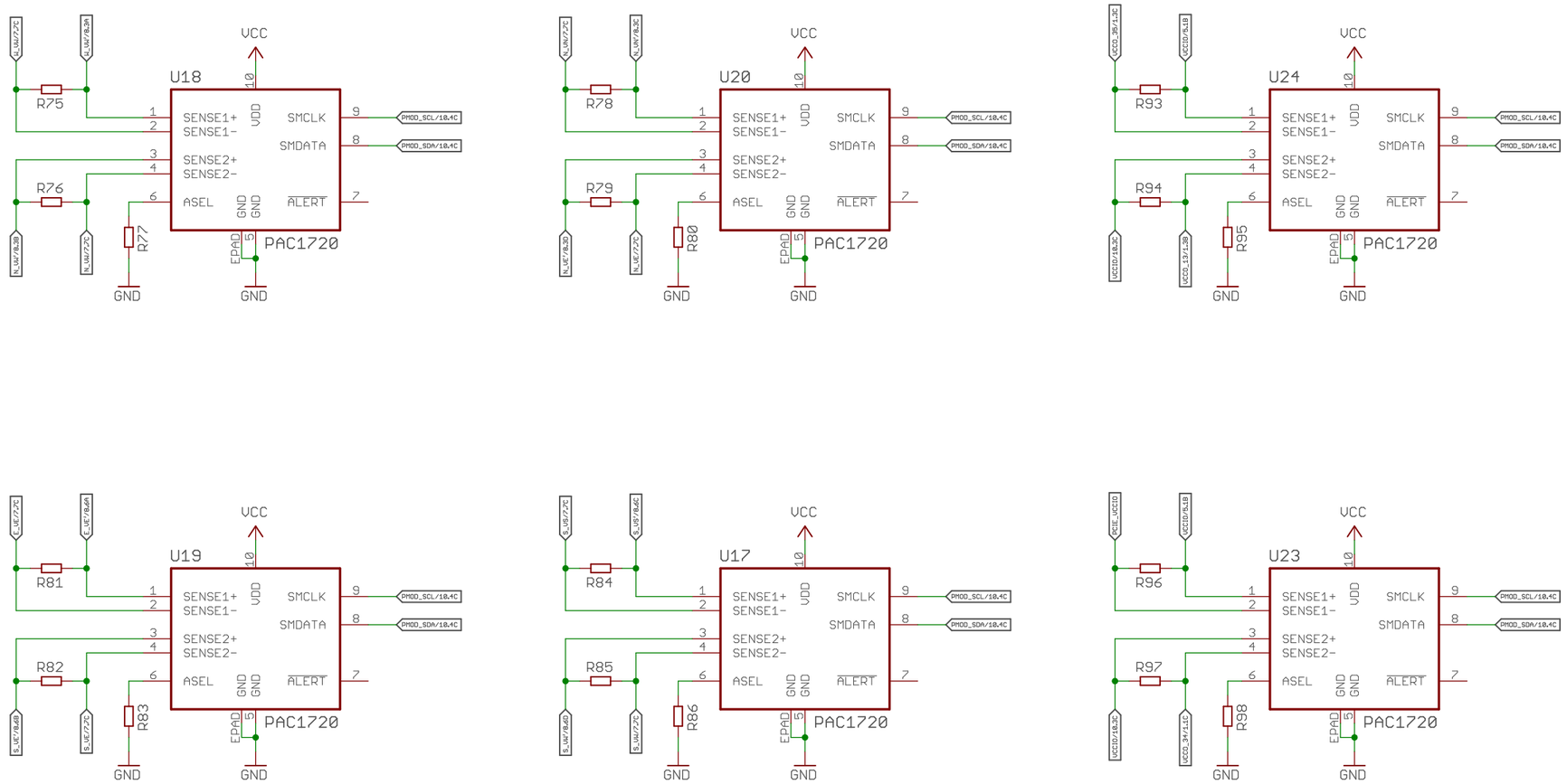

AXIOM Beta Test

Sensor Power Sensing

axiom_beta_power_board_v0.17_test

12/14/21 6:57 PM

Sheet: 9/10

Copyright (C) 2015 H.Poetzl
Licensed under CERN OHL v.1.2

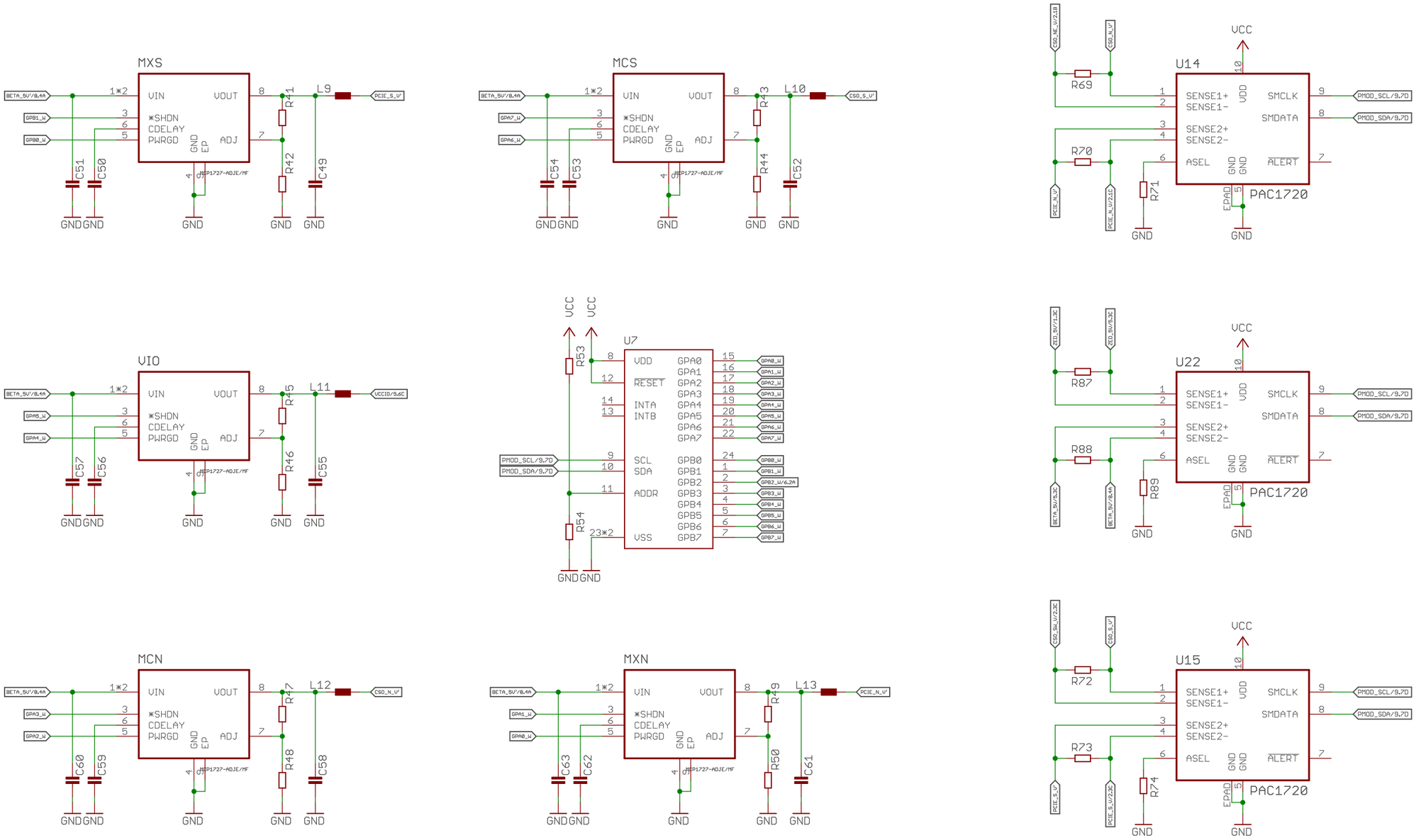

AXIOM Beta Test

Power, Control and Sensing

Copyright (C) 2015 H.Poetzl
Licensed under CERN OHL v.1.2

axiom_beta_power_board_v0.17_test

12/14/21 6:57 PM

Sheet: 10/10