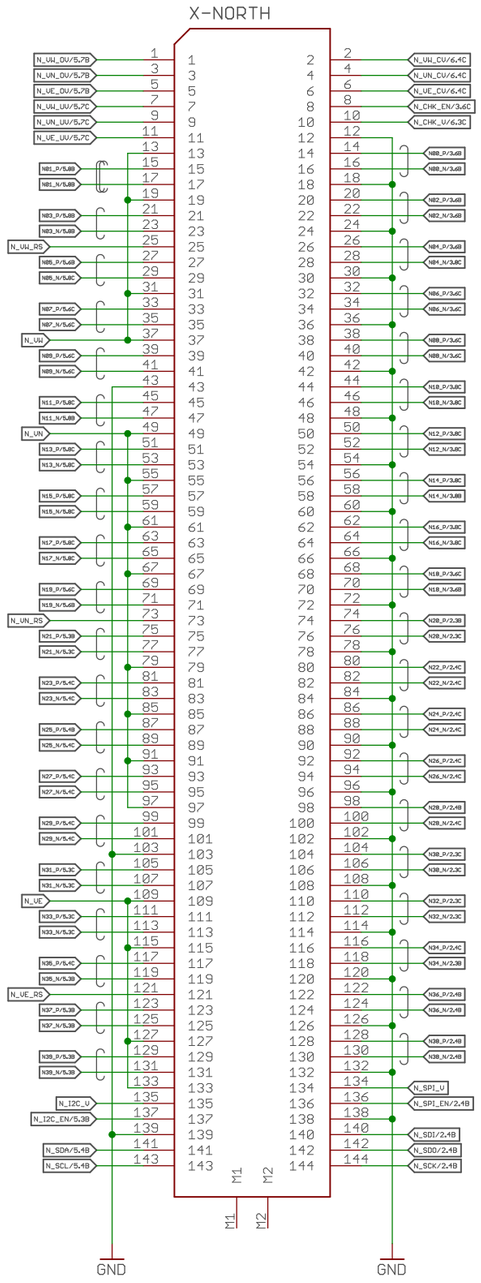

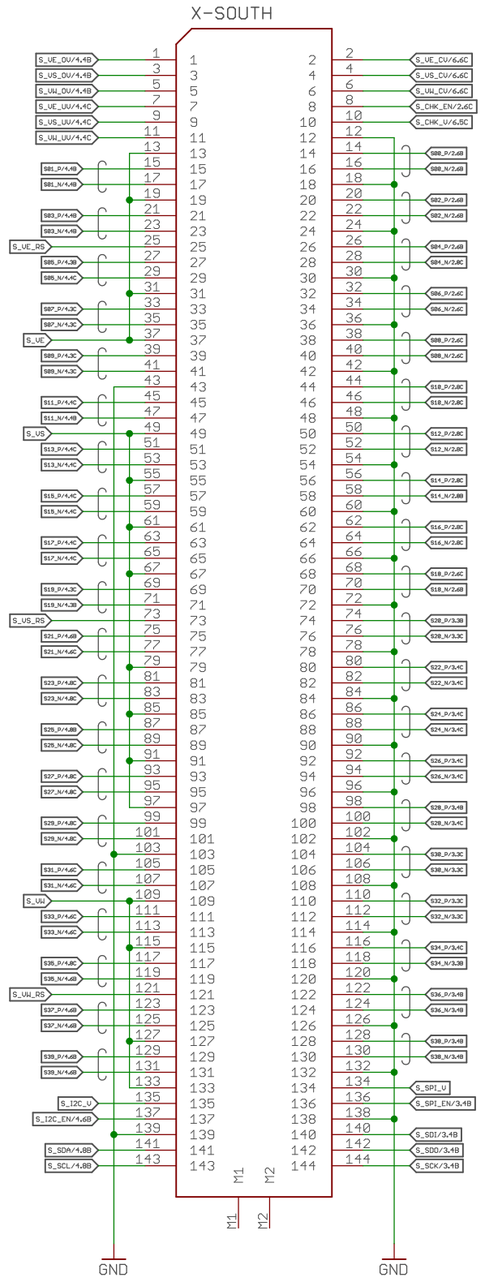

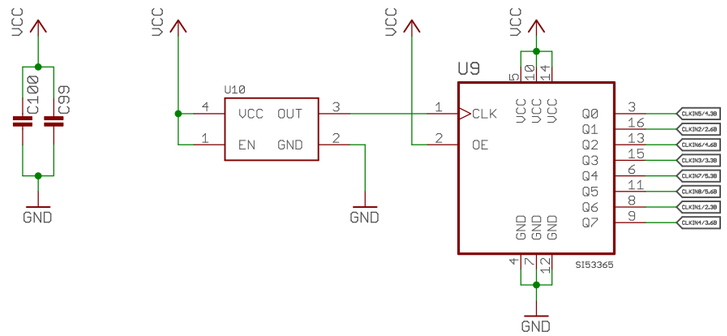

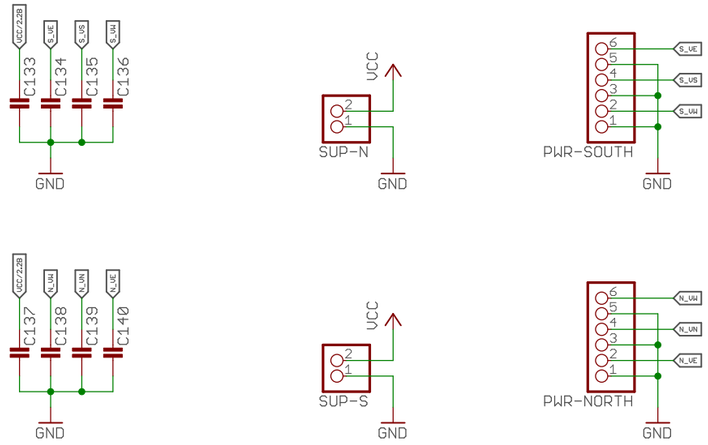

Sensor Frontend Test

Generic SFE

80 LVDS, I2C, SPI, Voltages

Copyright (C) 2016 Herbert Poetzl
Licensed under CERN OHL v.1.2

sensor_frontend_test_v0.5

12/14/21 8:13 PM

Sheet: 1/6

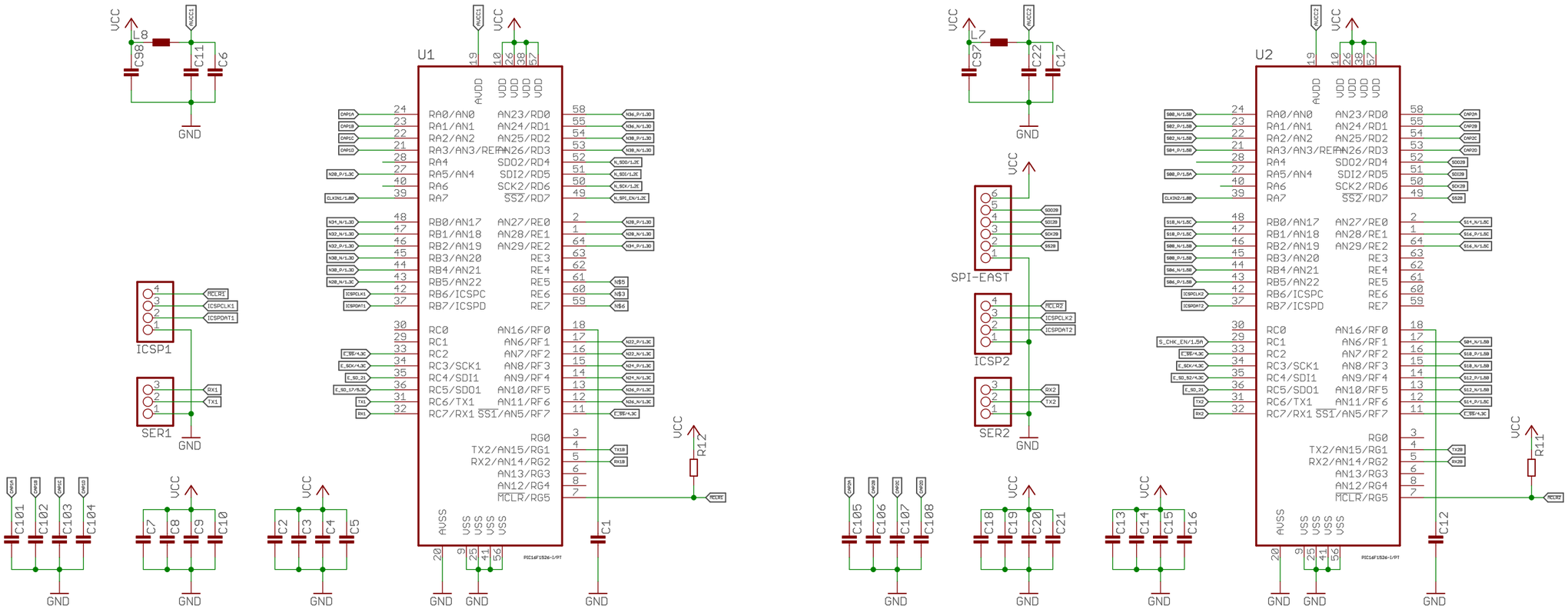

Sensor Frontend Test

Generic SFE

Block 1/2

Copyright (C) 2016 Herbert Poetzl
Licensed under CERN OHL v.1.2

sensor_frontend_test_v0.5

12/14/21 8:13 PM

Sheet: 2/6

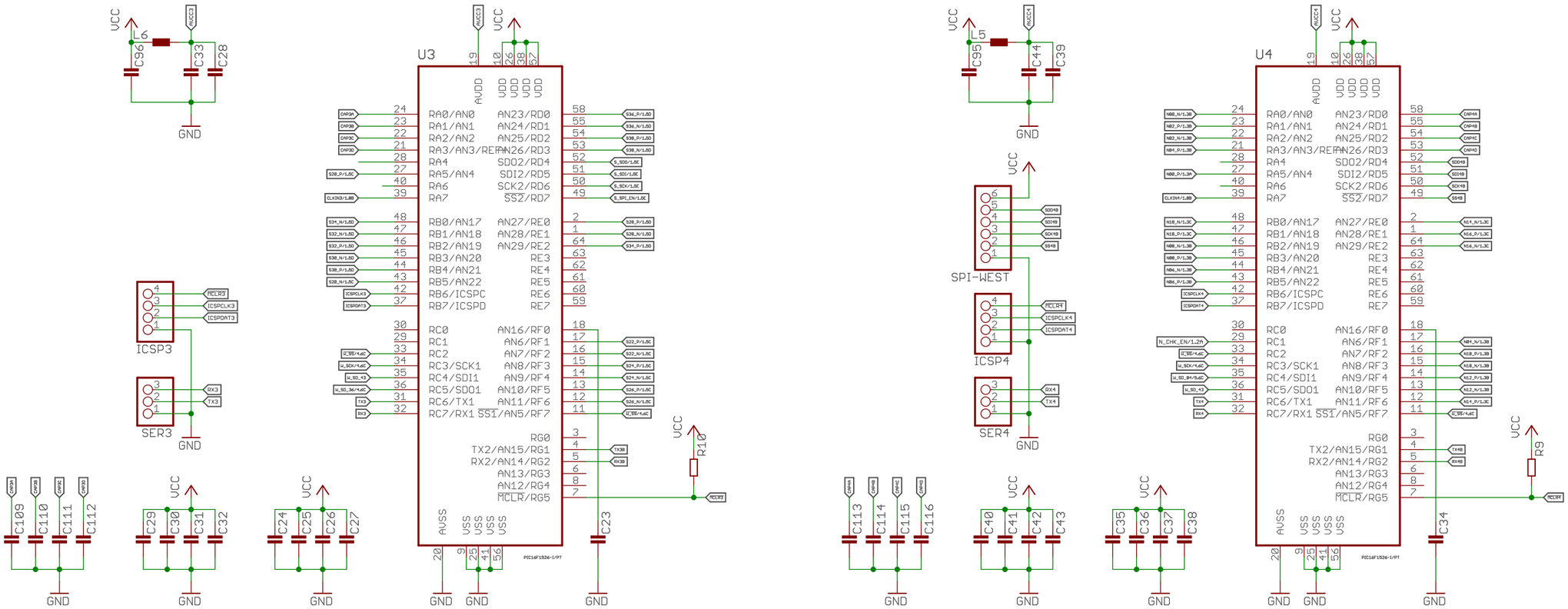

Sensor Frontend Test

Generic SFE

Block 3/4

Copyright (C) 2016 Herbert Poetzl
Licensed under CERN OHL v.1.2

sensor_frontend_test_v0.5

12/14/21 8:13 PM

Sheet: 3/6

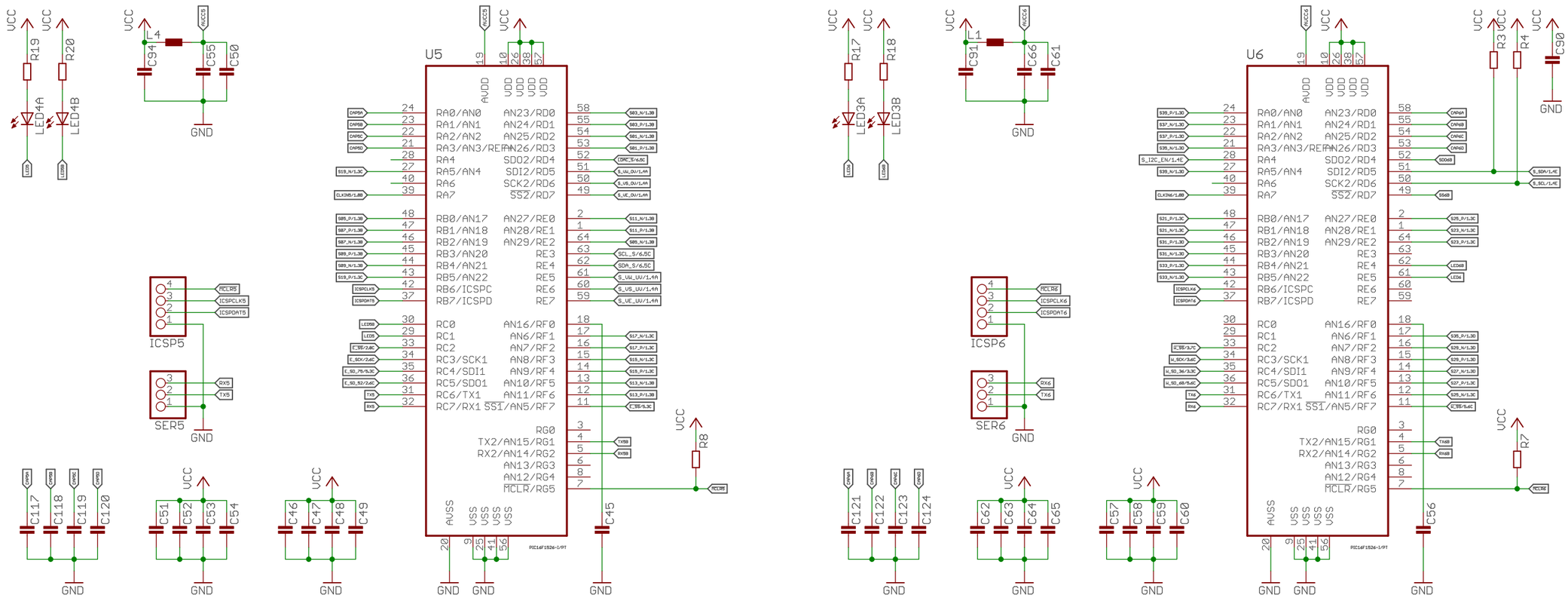

Sensor Frontend Test

Generic SFE

Block 5/6

Copyright (C) 2016 Herbert Poetzl
Licensed under CERN OHL v.1.2

sensor_frontend_test_v0.5

12/14/21 8:13 PM

Sheet: 4/6

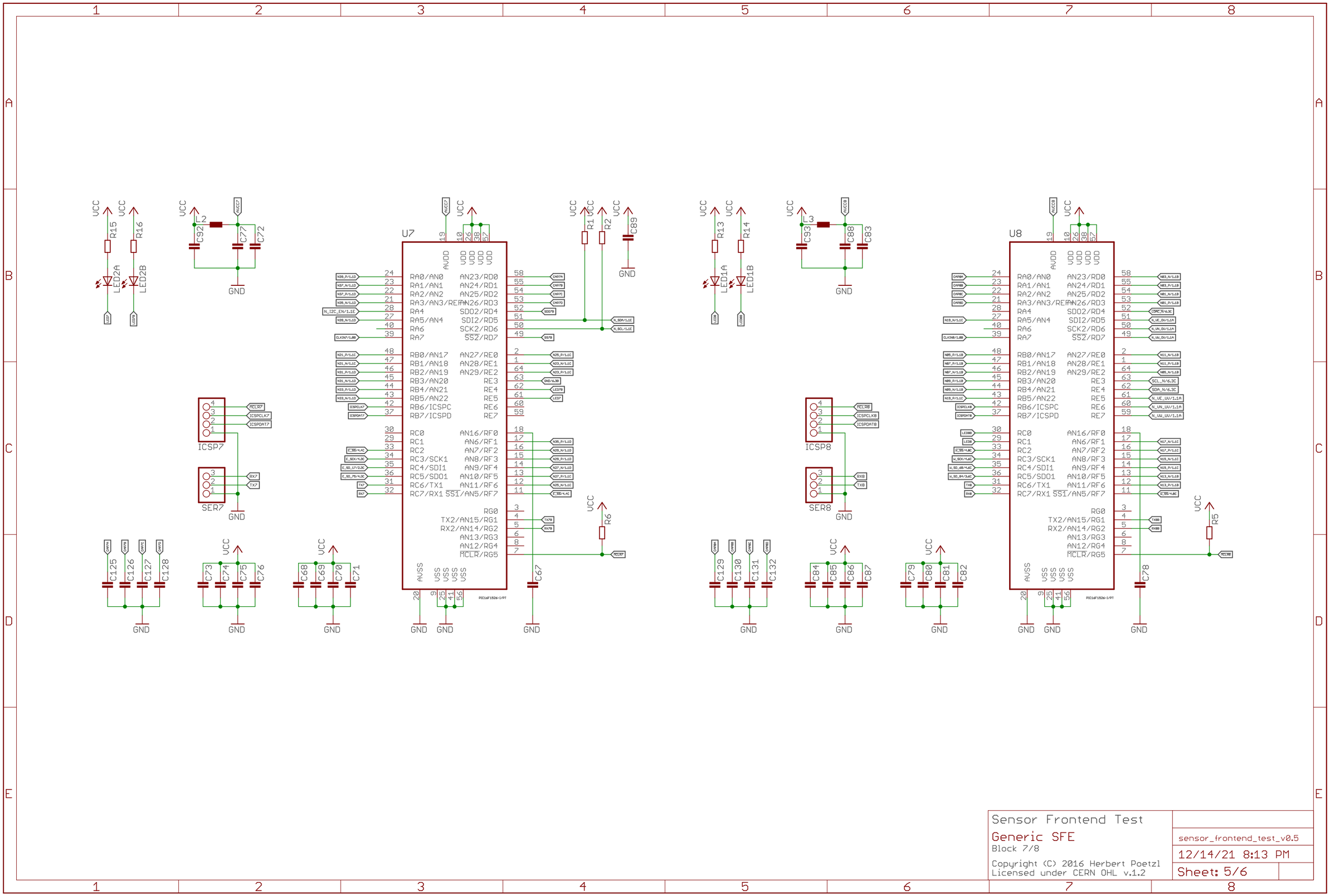

Sensor Frontend Test

Generic SFE

Block 7/8

Copyright (C) 2016 Herbert Poetzl
Licensed under CERN OHL v.1.2

sensor_frontend_test_v0.5

12/14/21 8:13 PM

Sheet: 5/6

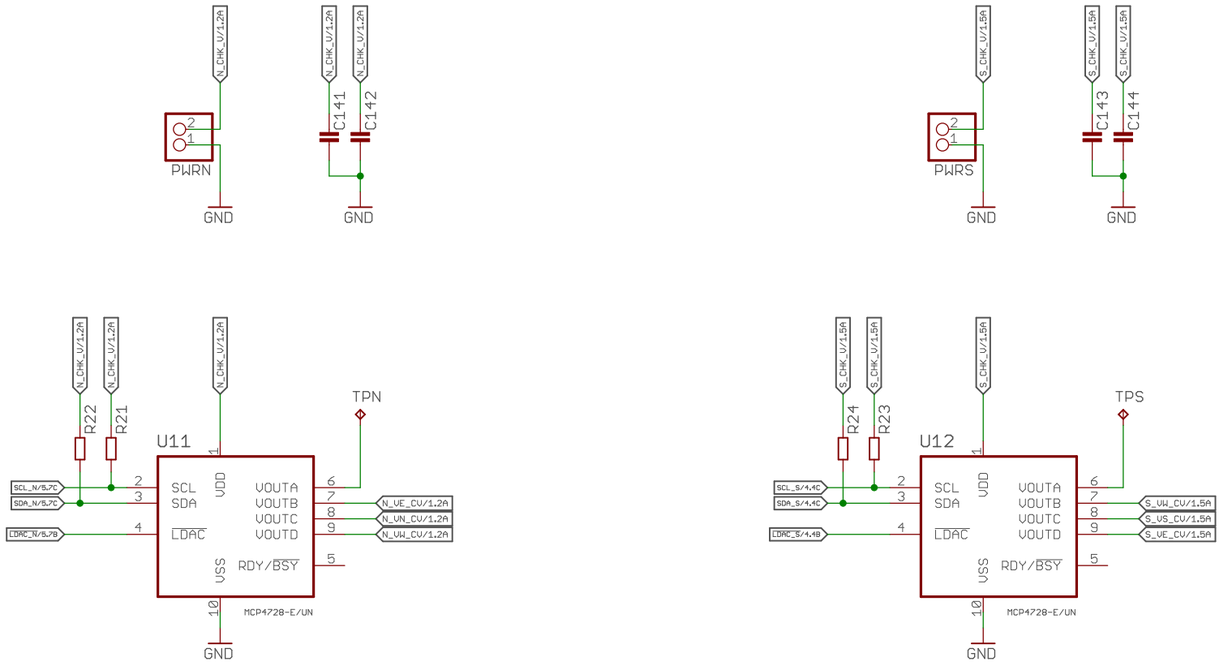

Sensor Frontend Test

Generic SFE

Voltage DACs

Copyright (C) 2016 Herbert Poetzl
Licensed under CERN OHL v.1.2

sensor_frontend_test_v0.5

12/14/21 8:13 PM

Sheet: 6/6