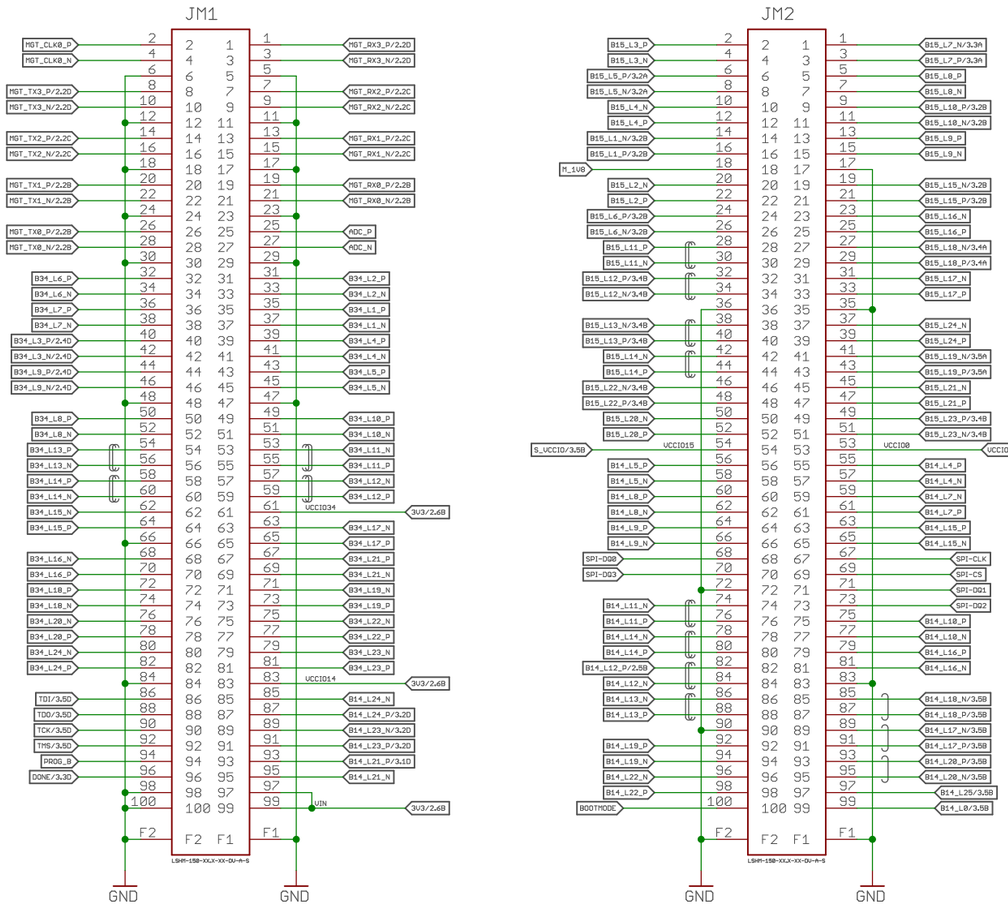


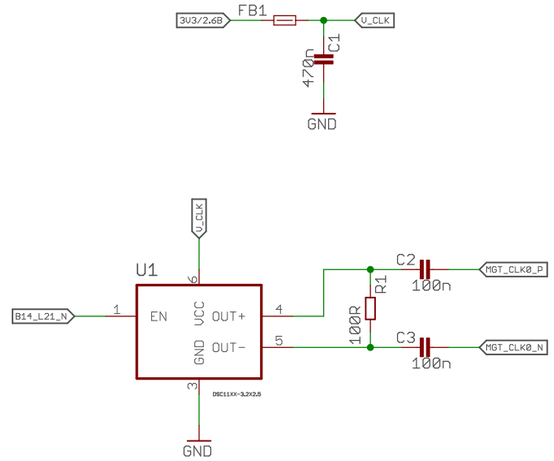


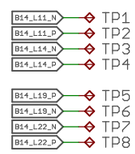


AXIOM Beta Module

Trenz SATA Plugin Module

Copyright (C) 2019 H.Poetzl
Licensed under CERN OHL v.1.2

axiom_beta_plugin_module_TE0714_SATA_v0.6

12/14/21 6:57 PM

Sheet: 1/3

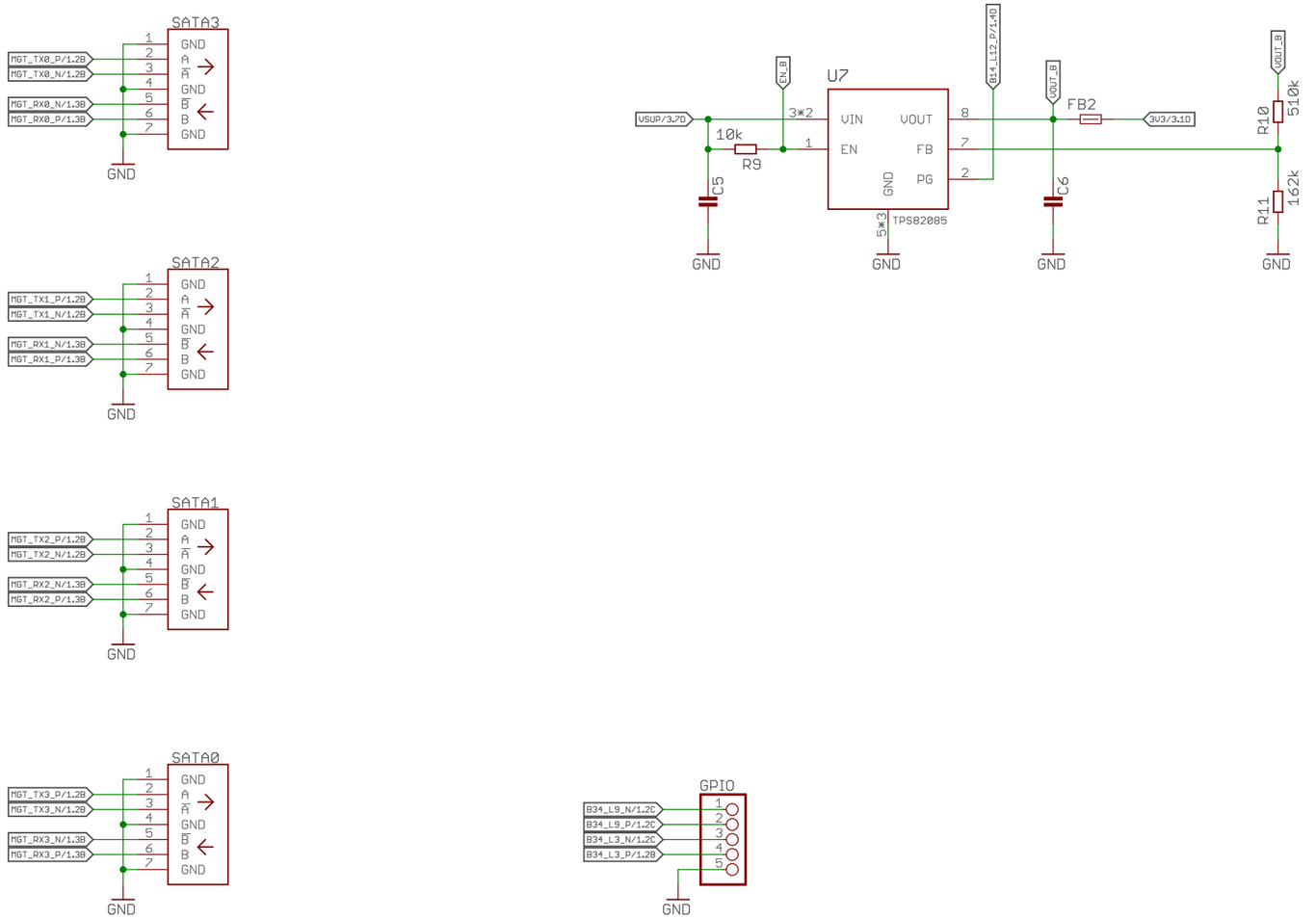


Avoid B14_L13_N/P because of clash with sys_clk!!!

AXIOM Beta Module

Trenz SATA Plugin Module

Copyright (C) 2019 H.Poetzl
Licensed under CERN OHL v.1.2

axiom_beta_plugin_module_TE0714_SATA_v0.6

12/14/21 6:57 PM

Sheet: 2/3

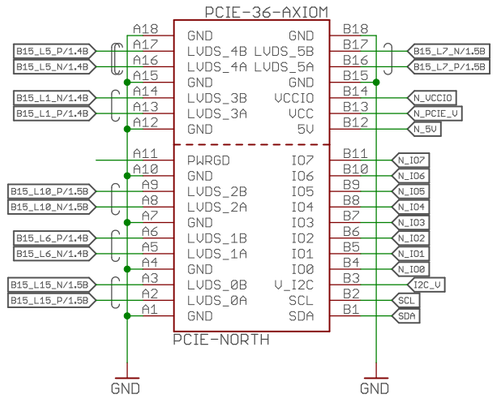


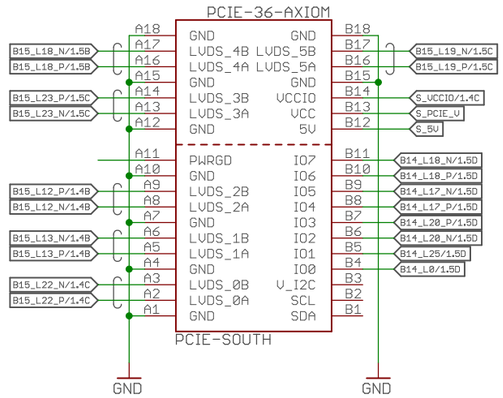


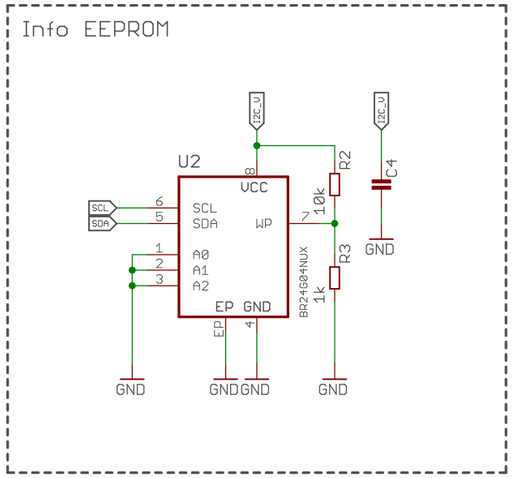


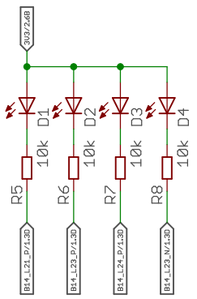


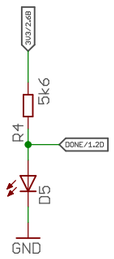


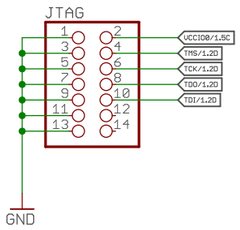


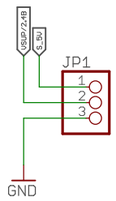


AXIOM Beta Module

Trenz SATA Plugin Module

Copyright (C) 2019 H.Poetzl
Licensed under CERN OHL v.1.2

axiom_beta_plugin_module_TE0714_SATA_v0.6

12/14/21 6:57 PM

Sheet: 3/3