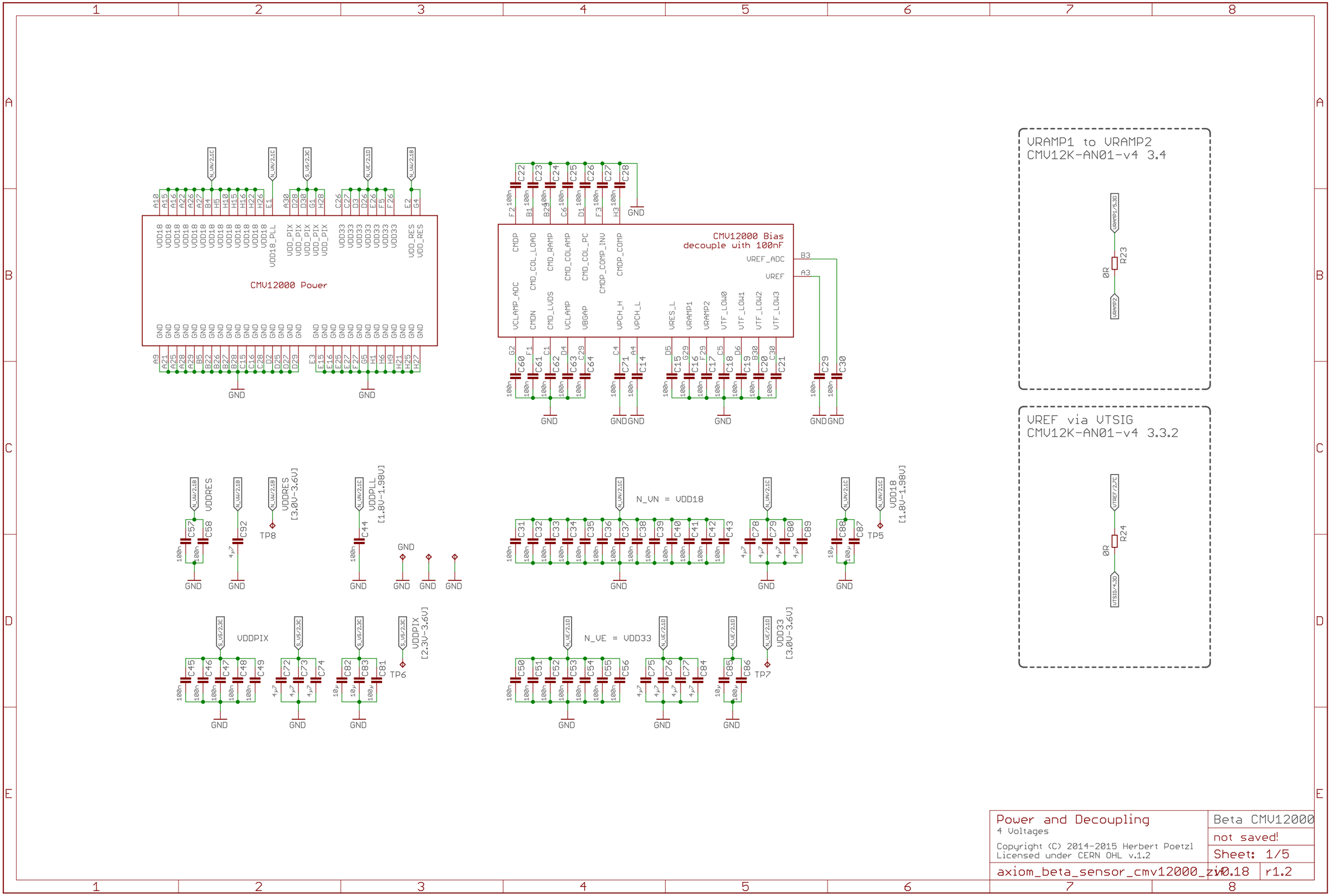


Power and Decoupling
4 Voltages

Copyright (C) 2014-2015 Herbert Poetzl
Licensed under CERN OHL v.1.2

Beta CMV12000
not saved!
Sheet: 1/5
axiom_beta_sensor_cmv12000_zi v0.18 r1.2

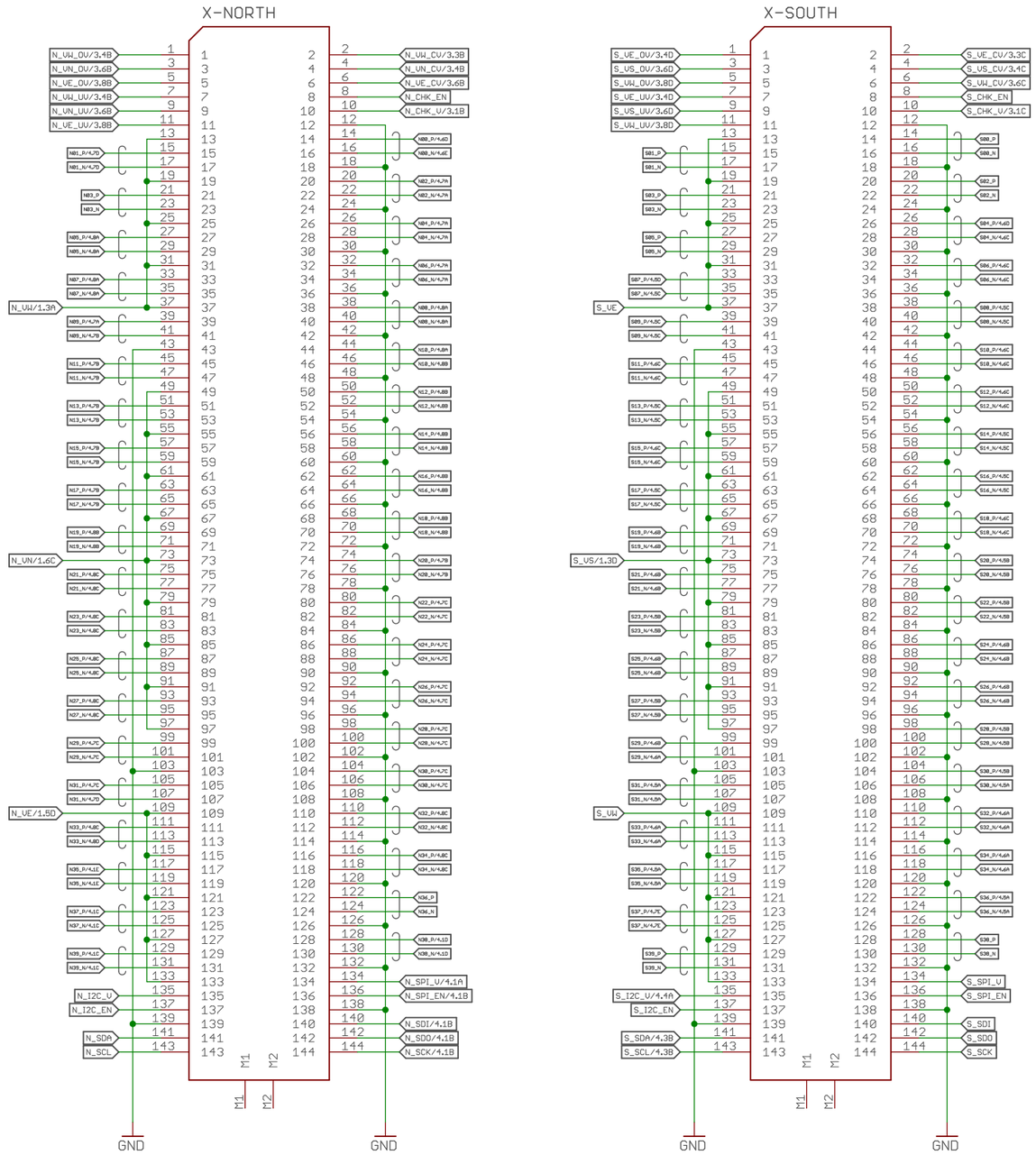


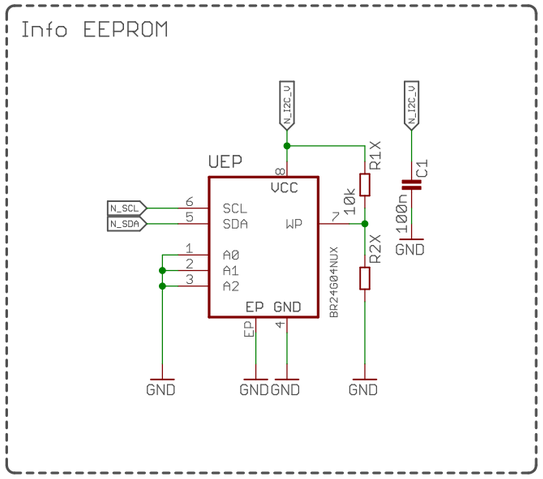


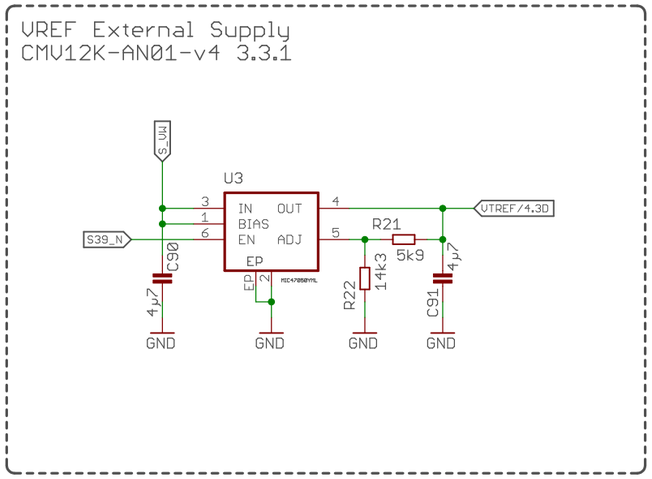


Interface, Info and VREF
Optional VREF Supply

Copyright (C) 2014-2015 Herbert Poetzl
Licensed under CERN OHL v.1.2

| | |
|---|---|
| Beta CMV12000 | |
| not saved! | |
| Sheet: 2/5 | |
| axiom_beta_sensor_cmv12000_ziv0.18 | r1.2 |

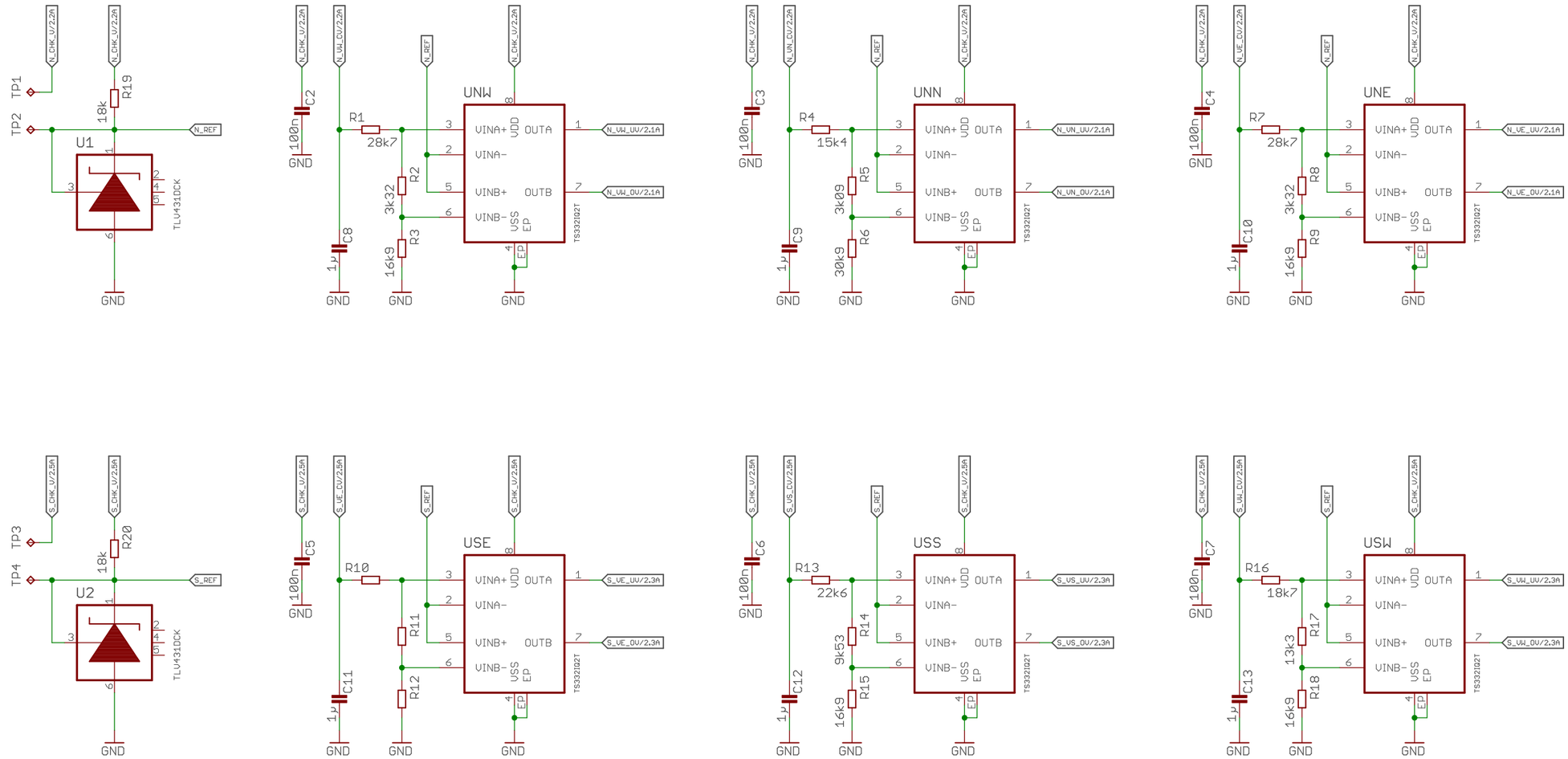


| | |
|---|---|
| Over/Under Voltage Check<br>4 Voltages | Beta CMV12000 |
| Copyright (C) 2014-2015 Herbert Poetzl<br>Licensed under CERN OHL v.1.2 | not saved! |
| | Sheet: 3/5 |
| axiom_beta_sensor_cmv12000_zin | v0.18 r1.2 |

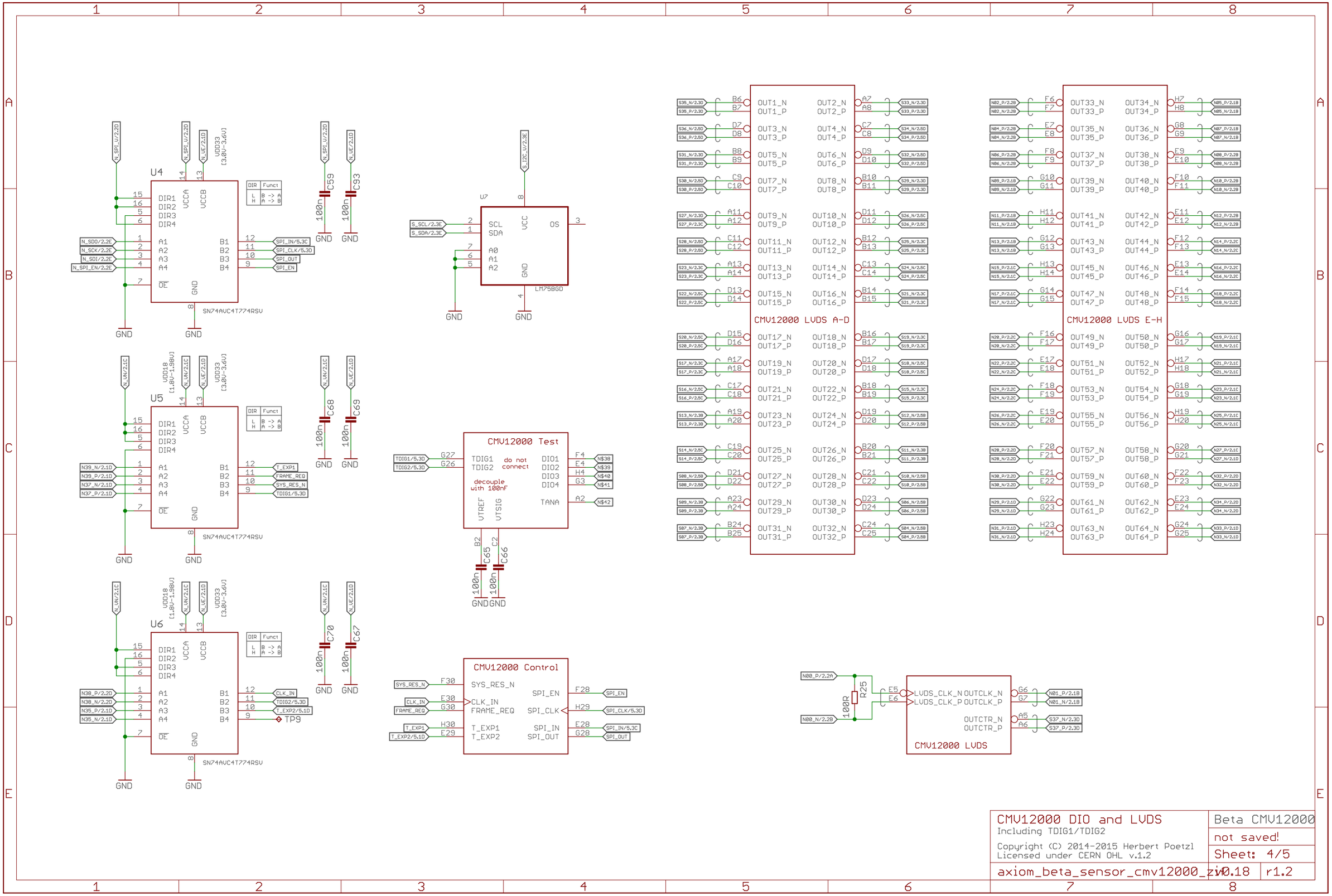


CMV12000 DIO and LVDS
Including TDIG1/TDIG2

Copyright (C) 2014-2015 Herbert Poetzl
Licensed under CERN OHL v.1.2

Beta CMV12000
not saved!
Sheet: 4/5
axiom_beta_sensor_cmv12000_zi v0.18 r1.2

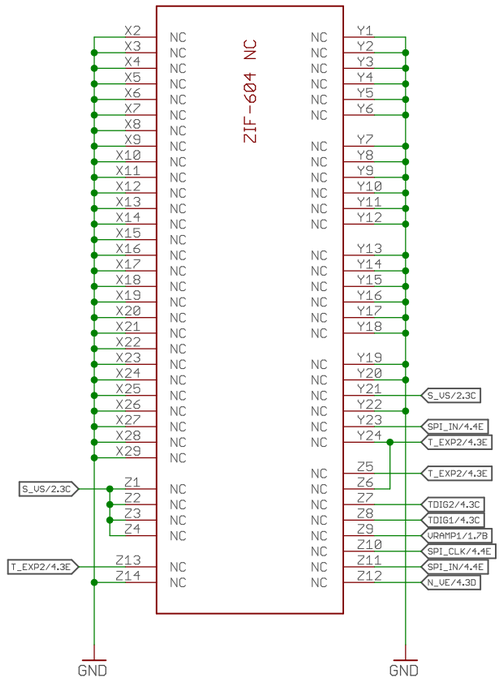


ZIF Unused Pins

Copyright (C) 2014-2015 Herbert Poetzl
Licensed under CERN OHL v.1.2

| | |
|---|---|
| Beta CMV12000 | |
| not saved! | |
| Sheet: 5/5 | |
| axiom_beta_sensor_cmv12000_zif | v0.18 r1.2 |