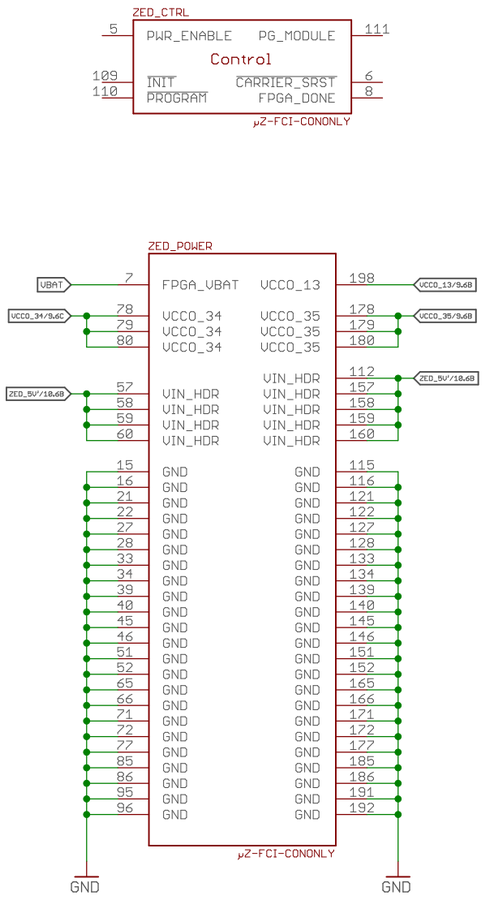


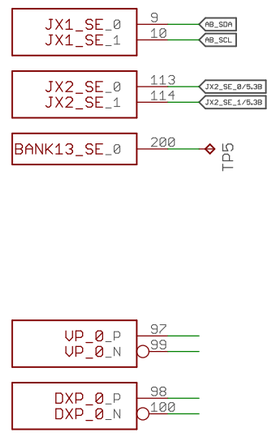


AXIOM Beta Test

MicroZed Power

axiom_beta_power_board_v0.8_test

12/14/21 6:59 PM

Sheet: 1/10

Copyright (C) 2014 H.Poetzl
Licensed under CERN OHL v.1.2

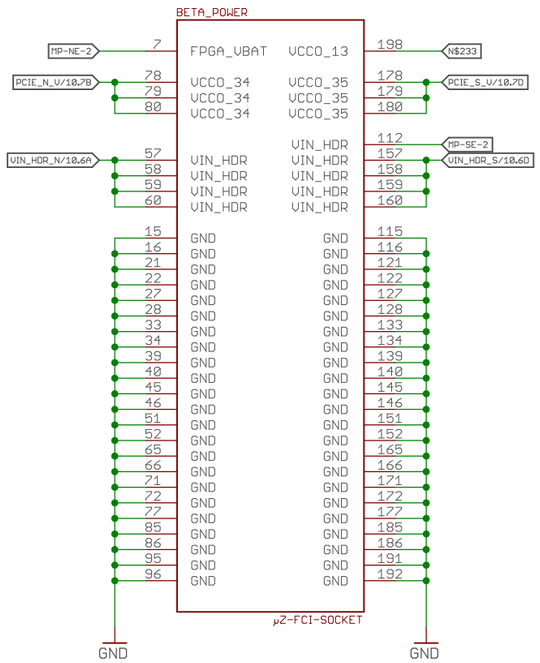


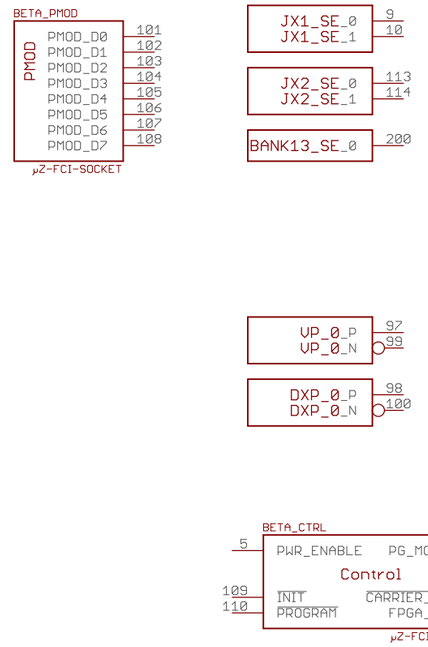


AXIOM Beta Test

Beta Power

Copyright (C) 2015 H.Poetzl
Licensed under CERN OHL v.1.2

axiom_beta_power_board_v0.8_test

12/14/21 6:59 PM

Sheet: 2/10

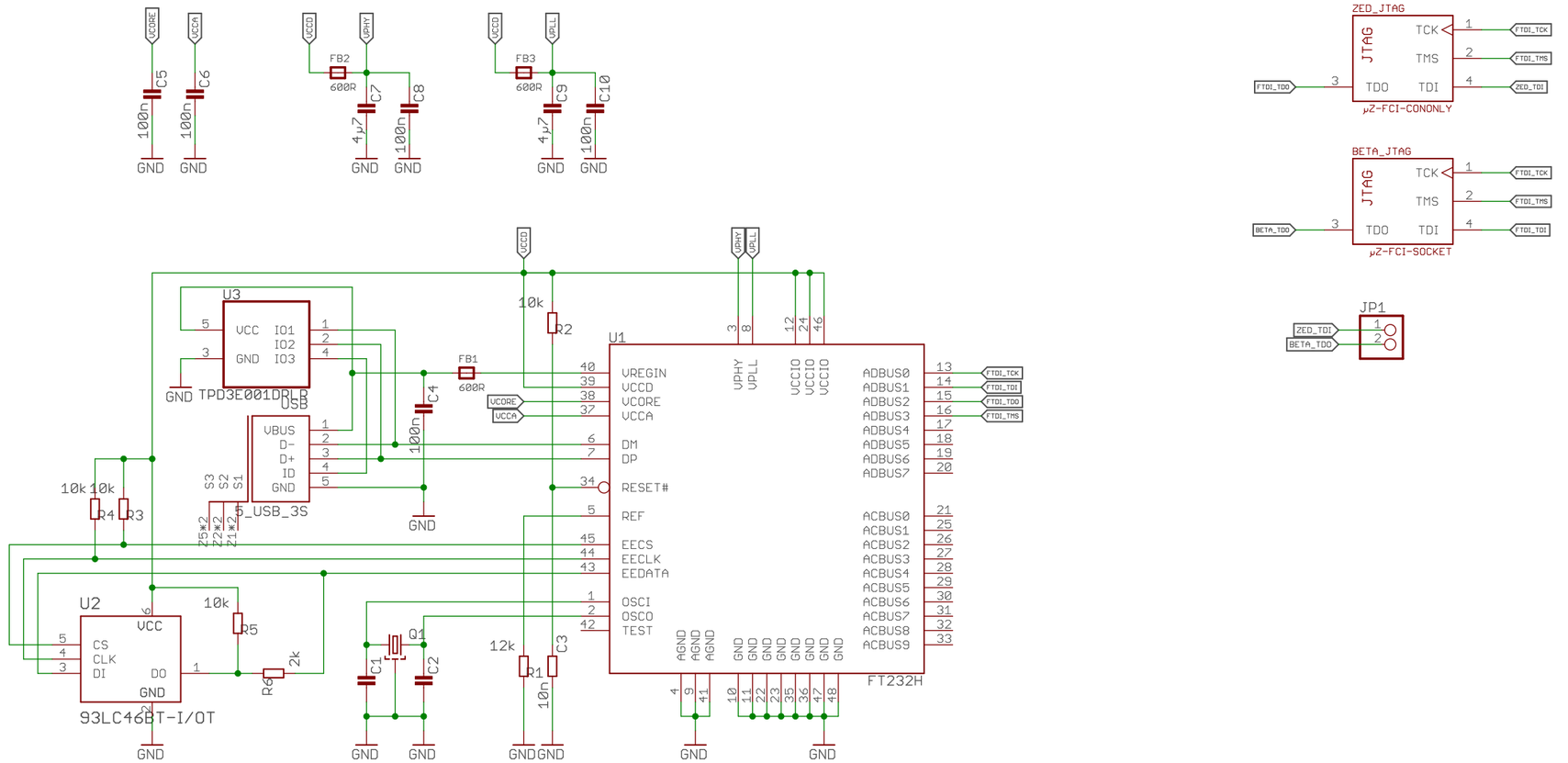


AXIOM Beta Test

FTDI Debug Interface

Copyright (C) 2014 H.Poetzl
Licensed under CERN OHL v.1.2

axiom_beta_power_board_v0.8_test

12/14/21 6:59 PM

Sheet: 3/10

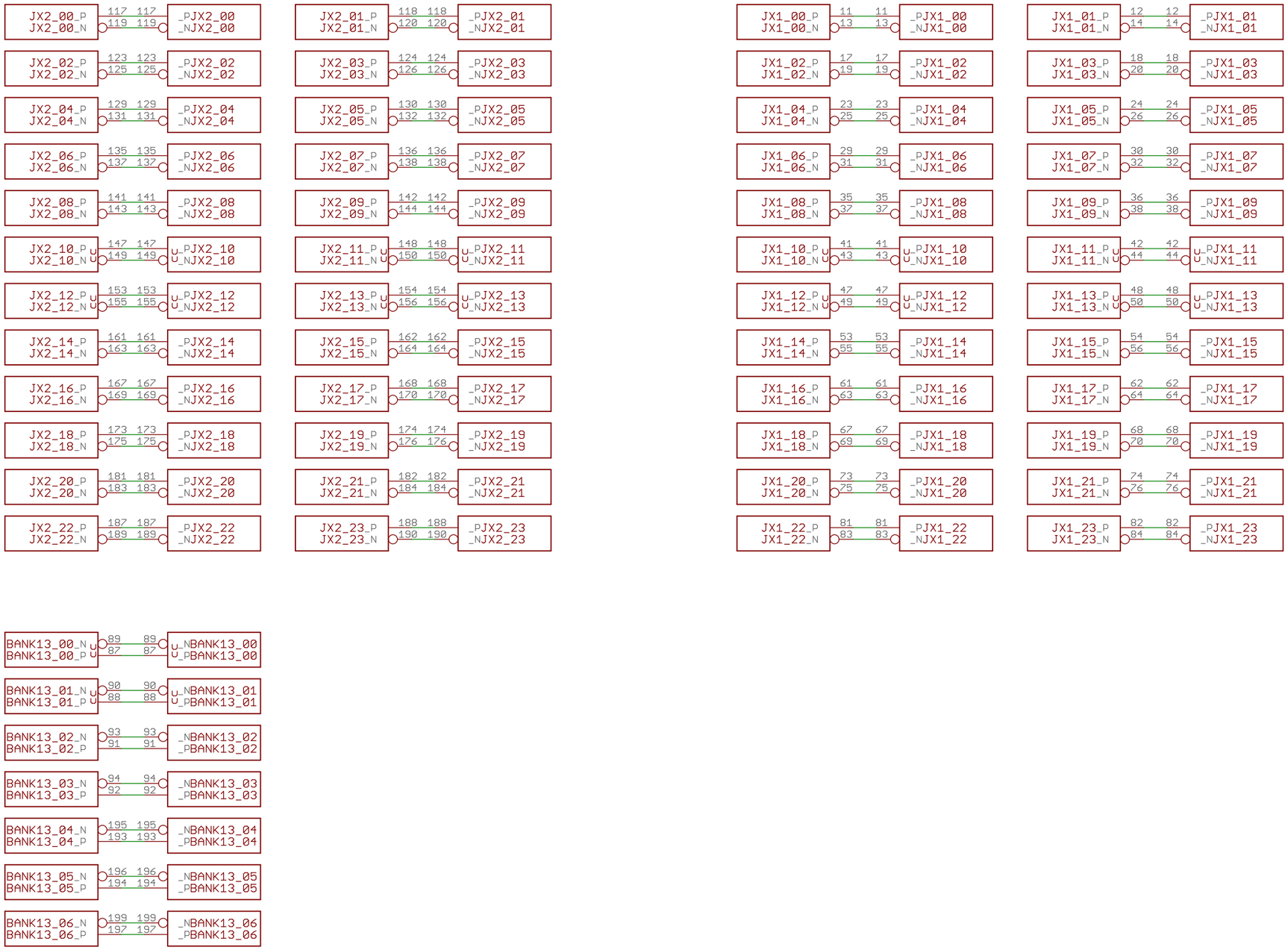


AXIOM Beta Test

LVDS Passthrough

Copyright (C) 2014 H.Poetzl
Licensed under CERN OHL v.1.2

axiom_beta_power_board_v0.8_test

12/14/21 6:59 PM

Sheet: 4/10

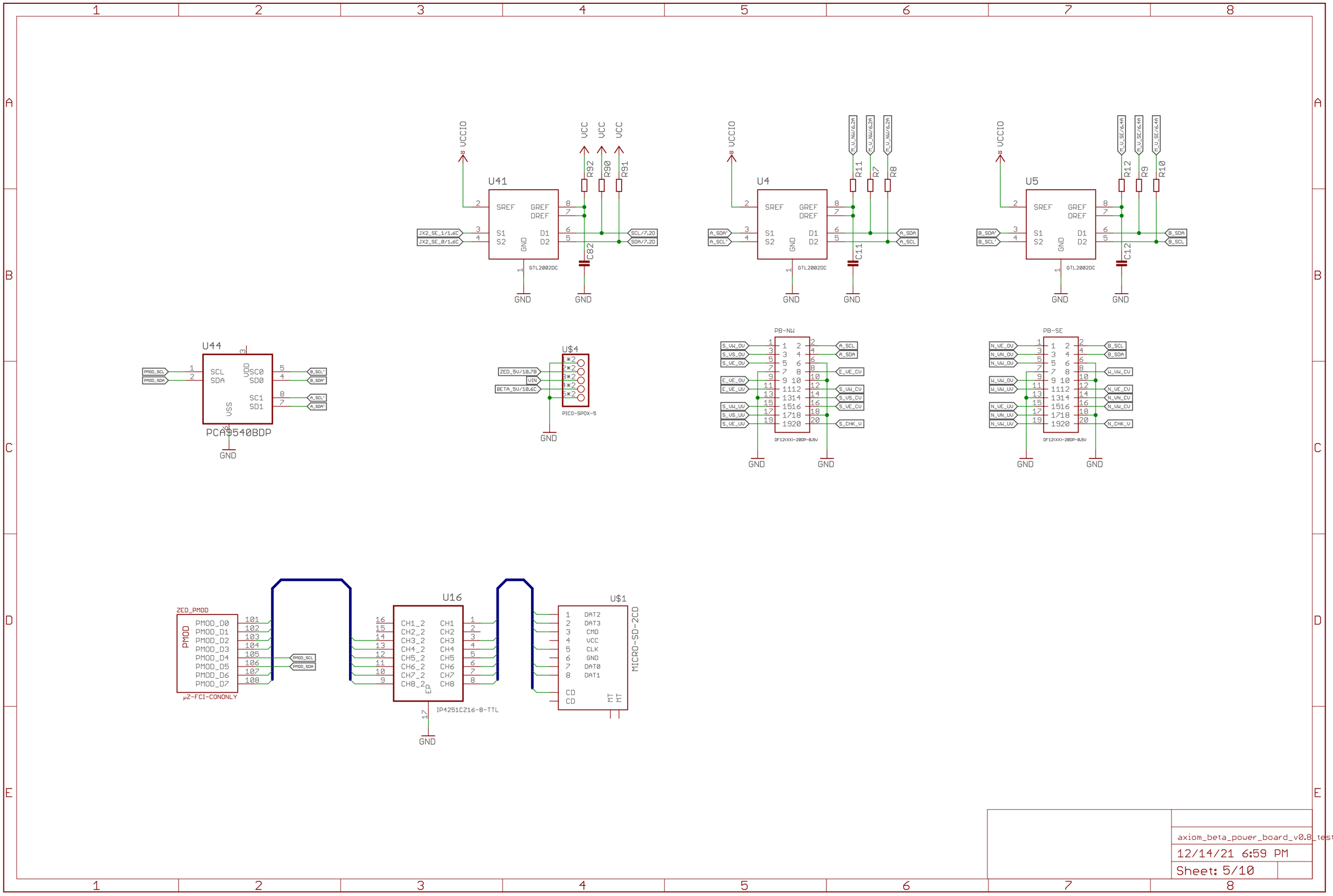


axiom_beta_power_board_v0.8_test

12/14/21 6:59 PM

Sheet: 5/10

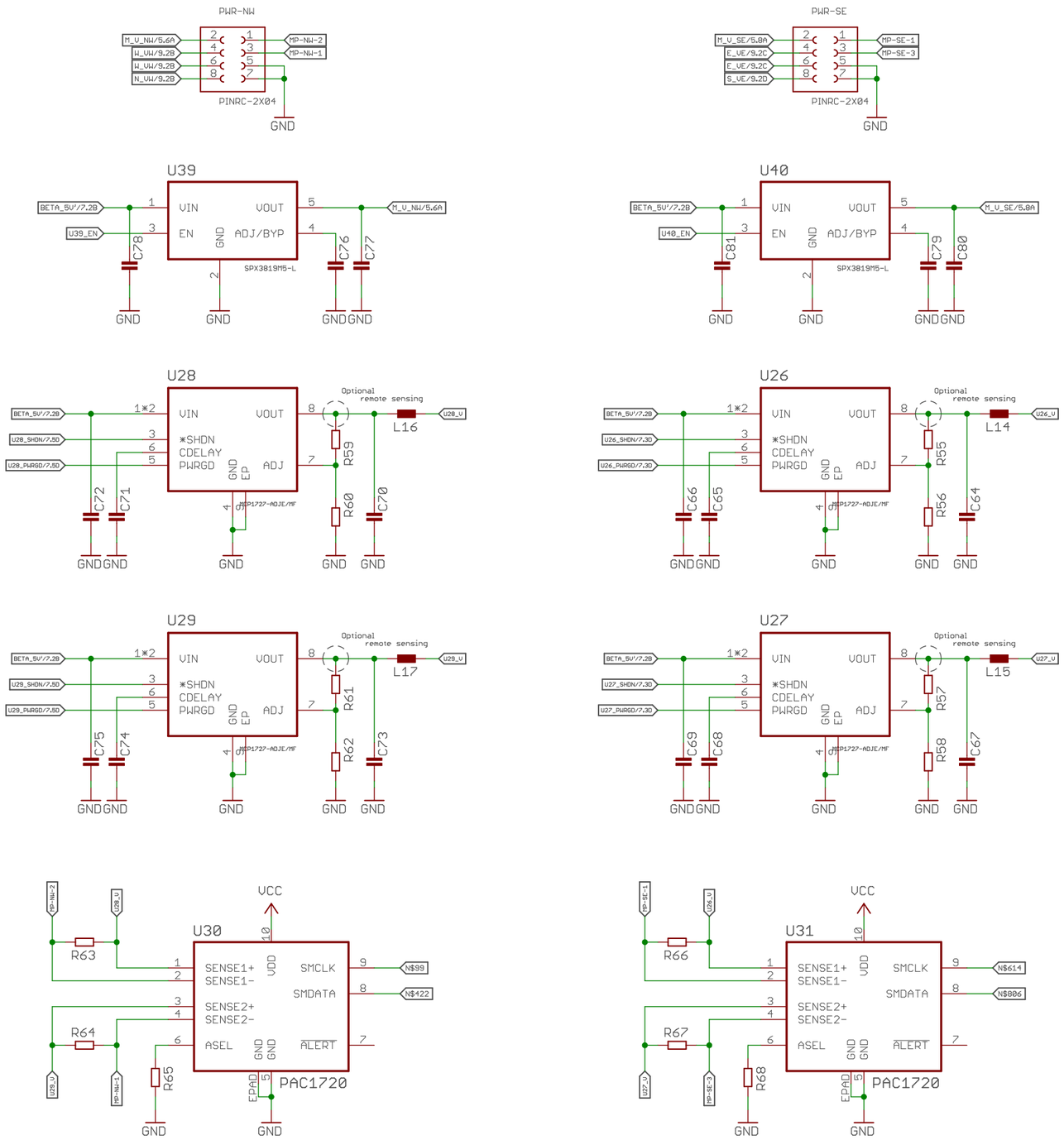


axiom_beta_power_board_v0.8_test

12/14/21 6:59 PM

Sheet: 6/10

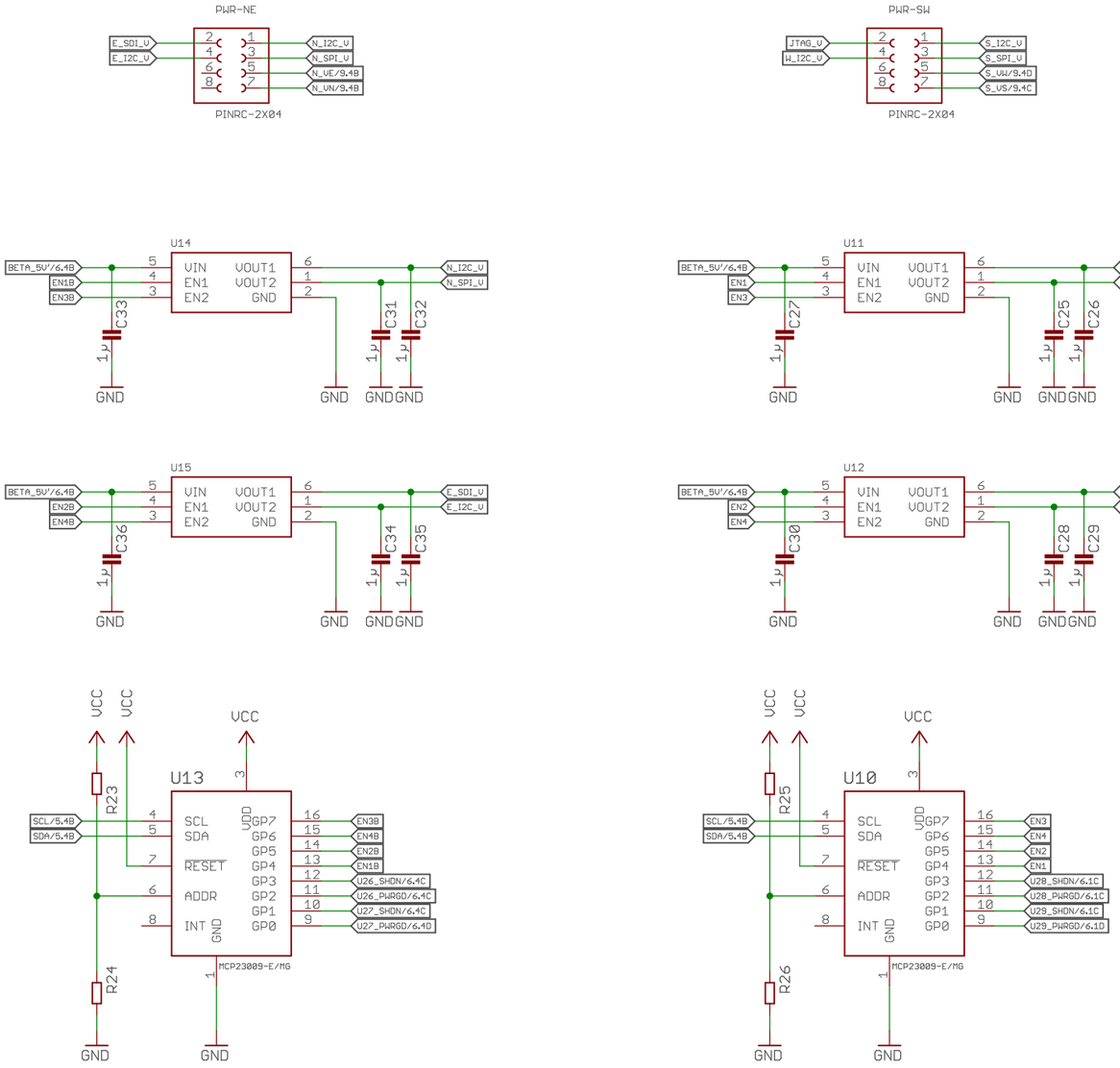


axiom_beta_power_board_v0.8_test

12/14/21 6:59 PM

Sheet: 7/10

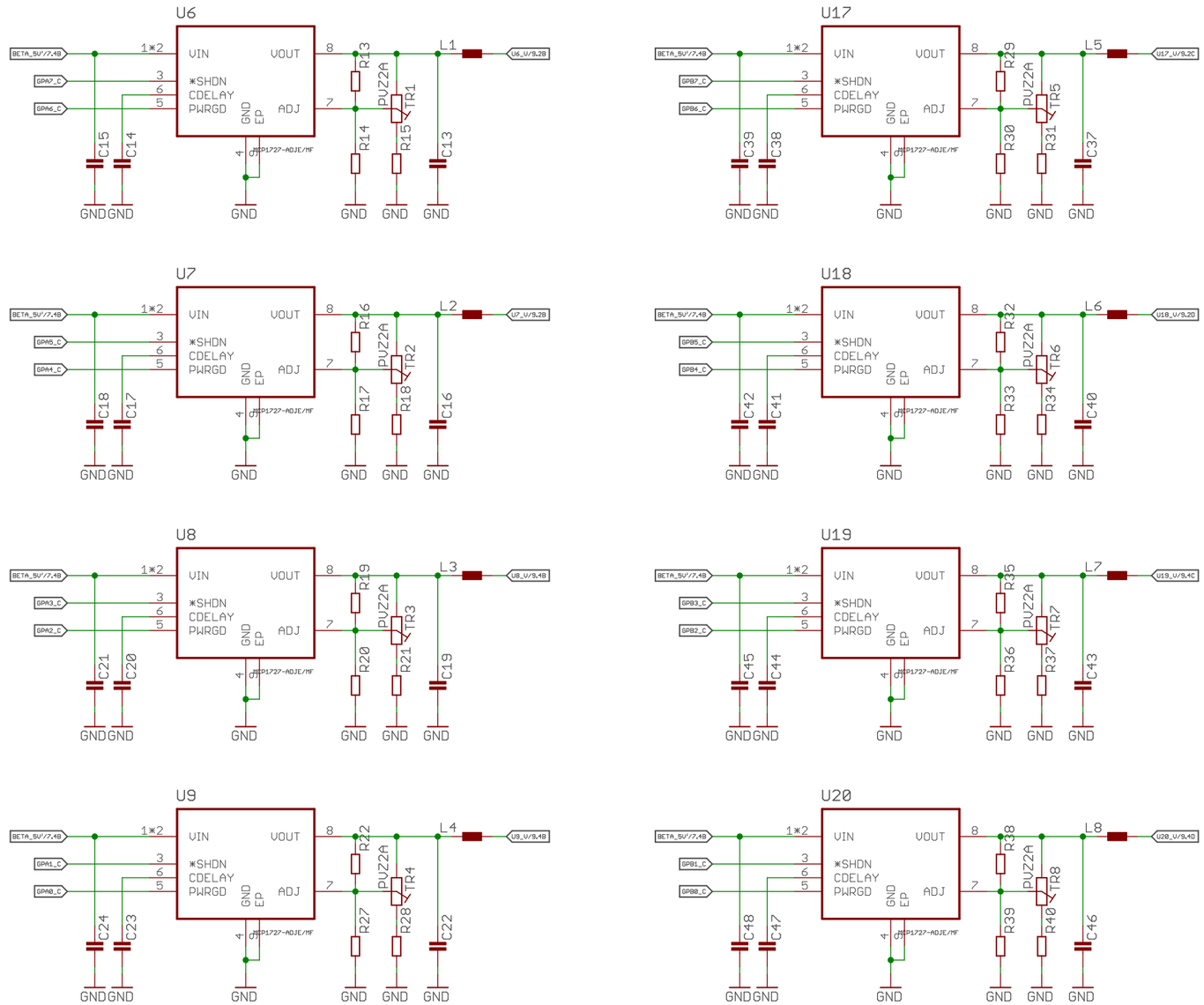


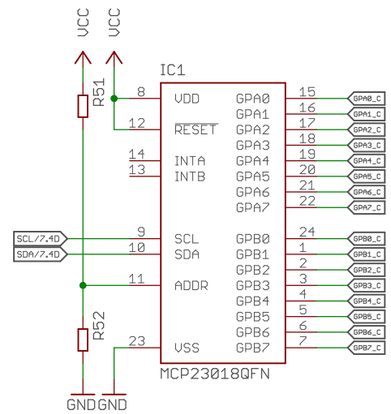


axiom_beta_power_board_v0.8_test

12/14/21 6:59 PM

Sheet: 8/10

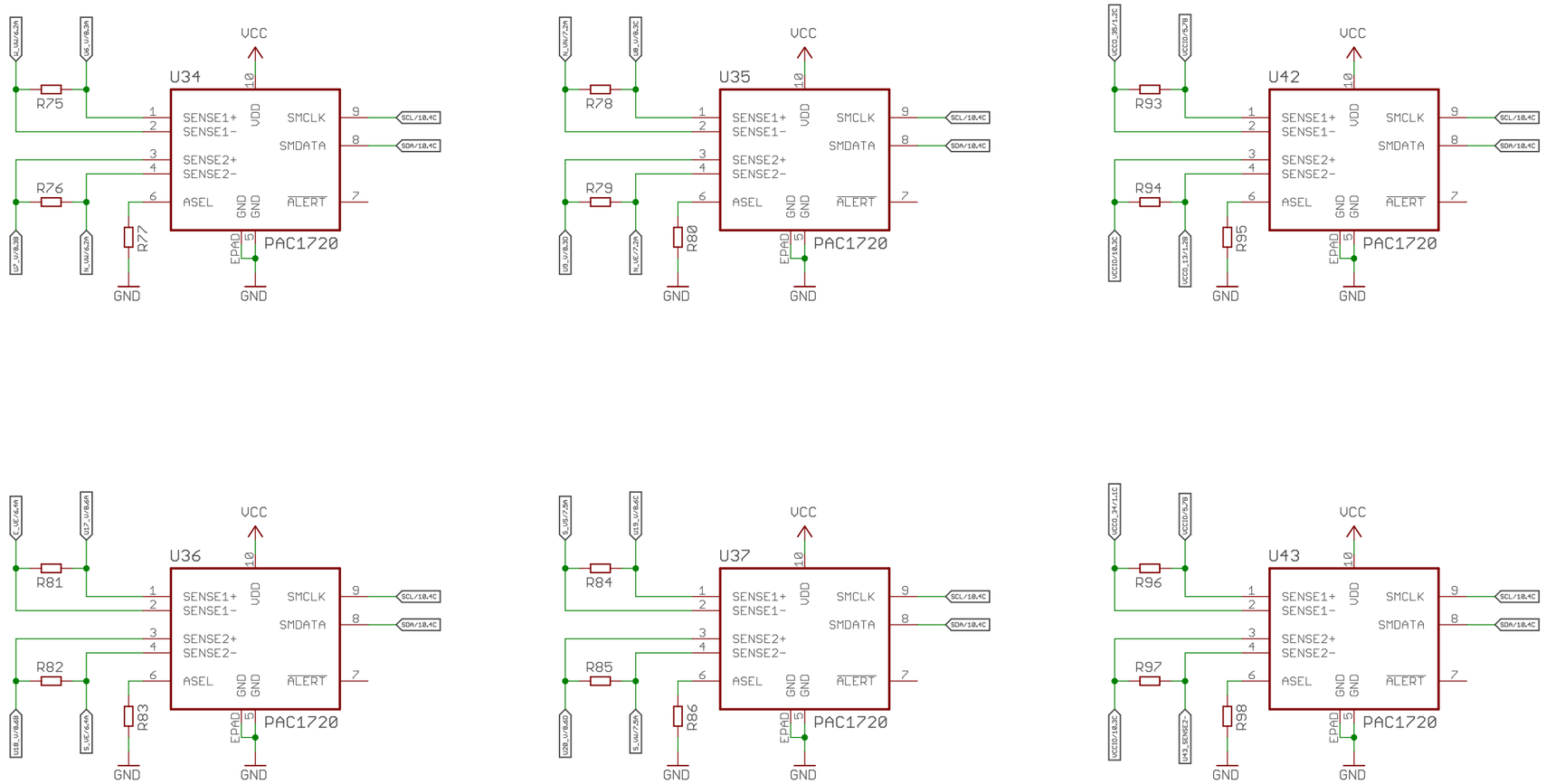


axiom_beta_power_board_v0.8_test

12/14/21 6:59 PM

Sheet: 9/10

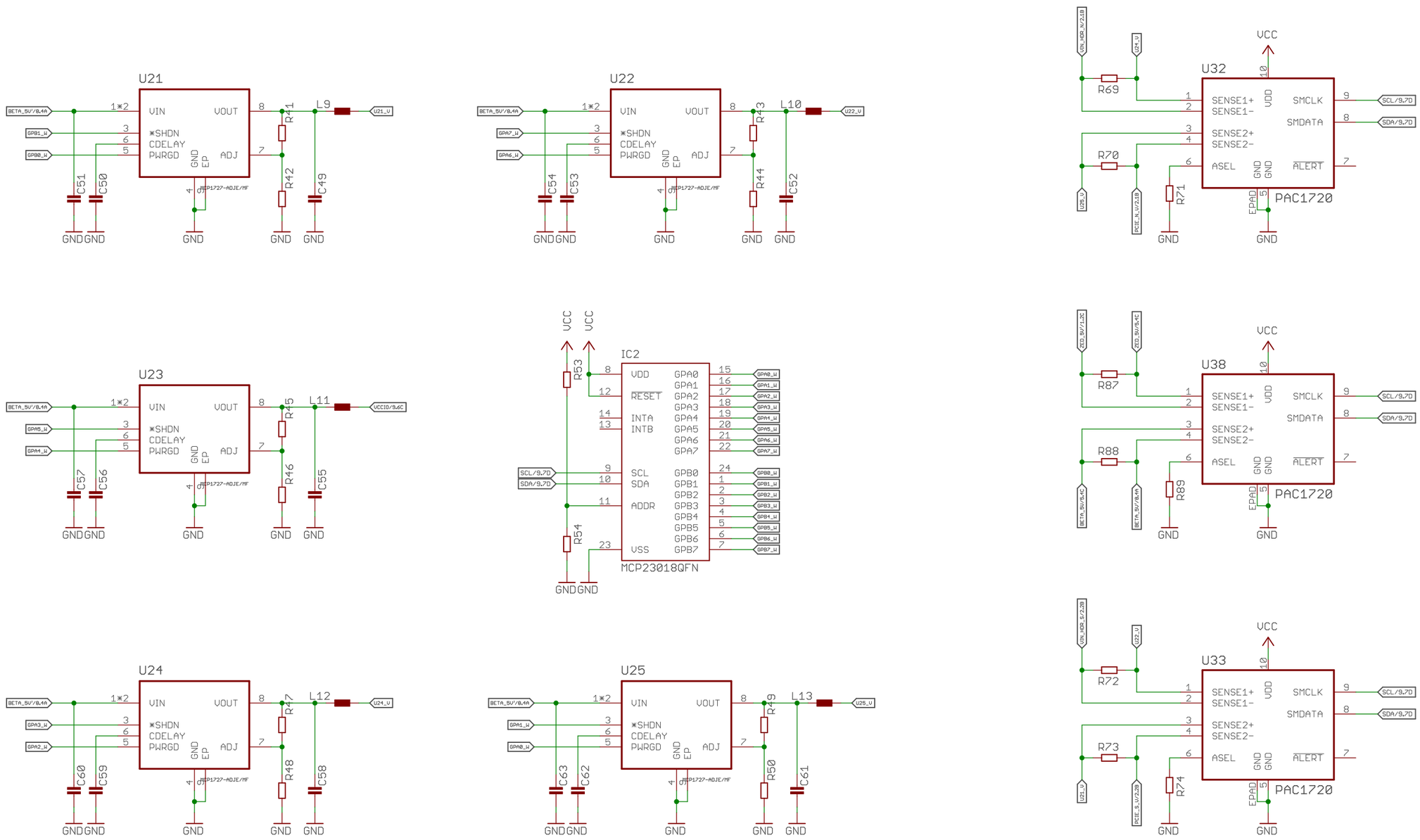


axiom_beta_power_board_v0.8_test

12/14/21 6:59 PM

Sheet: 10/10