F1 FIDUCIAL

F2 FIDUCIAL

F3 FIDUCIAL

F4 FIDUCIAL

F5 FIDUCIAL

F6 FIDUCIAL

F7 FIDUCIAL

F8 FIDUCIAL

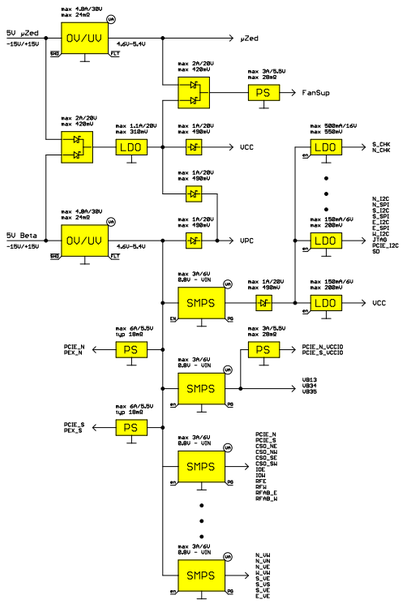

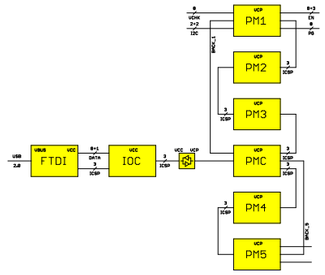

OV/UV Resistors 0.5%

```
15.4 2.4  150 [4.713, 4.949, 5.448, 5.176] [(4.672, 4.756), (4.905, 4.994), (5.399, 5.498), (5.129, 5.223)]
30.9 4.7  300 [4.713, 4.949, 5.430, 5.159] [(4.672, 4.756), (4.905, 4.994), (5.381, 5.480), (5.112, 5.206)]

20.5 3.24 200 [4.712, 4.948, 5.457, 5.184] [(4.670, 4.755), (4.904, 4.992), (5.408, 5.507), (5.137, 5.232)]
```

Future Modifications

- Kelvin connection and diff routing for sense?
- Round cream spots for better reflow?
- Replace Q1-Q3 by pre biased bipolar or alternatively add miller capacitance
- Maybe two resistors for R10/R14 or R12/R16 for finetuning?
- Turn R2* 90deg and turn C3* 180deg away?
- Add decoupling for digitpot and sensing?
- Discharge mosfet for 5V rails?

TODO:

- ✓ Adjust size 24 ratio to 15
- Increase roundness on PIC pads?
- ✓ Check label orientation on bottom
- ✓ Add orientation marks for LEDs DS*
- ✓ Shorten RGB LED pin pads and make RN5 larger (EXB-24)
- Positional markers for U1, U2, and U23
- U17 label size vs U34
- ✓ large pad [LP] package
- Orientation lines for 0402s?
- PIC pin one marker sizes
- Change D4 to MSS2P* [microSMP] or maybe remove again?
- ✓ Make CXY just Cnn?

PARTS:

PCT2075TP,147 vs MCP9808T-E/MC

Suitcher and HighV LDO capacitor …

- EMK107BBJ106MA-T [10UF 16V X5R 0603]
- TMK107BBJ106MA-T [10UF 25V X5R 0603 SMPS]
- ZRB18AR61E106ME01L [10UF 25V X5R 0603 General, Interposer]
- GRT188R61E106ME13D [10UF 25V X5R 0603 Automotive]
- GRM188R61E106MA73D [10UF 25V X5R 0603]
- GRM188R6YA106MA73D [10UF 35V X5R 0603 Derate]

Precision resistors OV/UV

- RR0510P-5111-D [5k11 0.5% 25ppm/C]
- RR0510P-472-D [4k7 0.5% 25ppm/C]
- RR0510P-2492-D [24k9 0.5% 25ppm/C]
- ERJ2RKD2403X [240k 0.5% 100ppm/C]

Prebiased bipolar transistor …

- DDTC123JLP-7 2.2k/47k
- DDTC143ZLP-7 4.7k/47k
- DDTC114YLP-7 10k/47k
- DDTC113TLP-7 1k/inf
- PDTC143ZM,315 4k7/47k
- PDTC114TM,315 10k/inf

OSHW LOGO

AXIOM Beta Power Board

Overview

axiom_beta_power_board_v2.23

>LAST_SAVED_TIME

Sheet: 1/17

Copyright (C) 2014-2018 H.Poetzl
Licensed under CERN OHL v.1.2

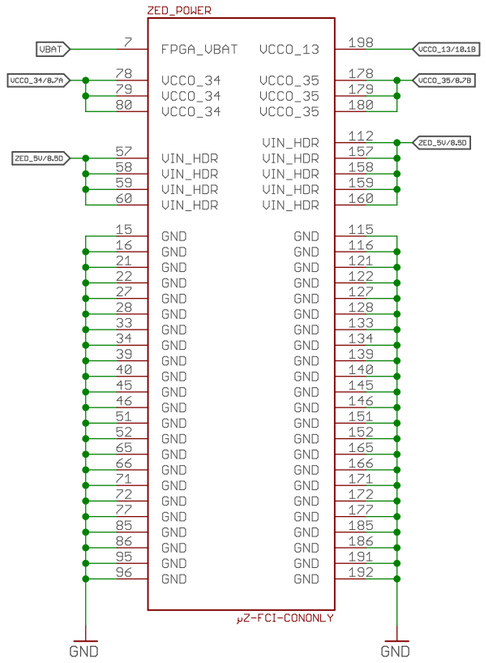

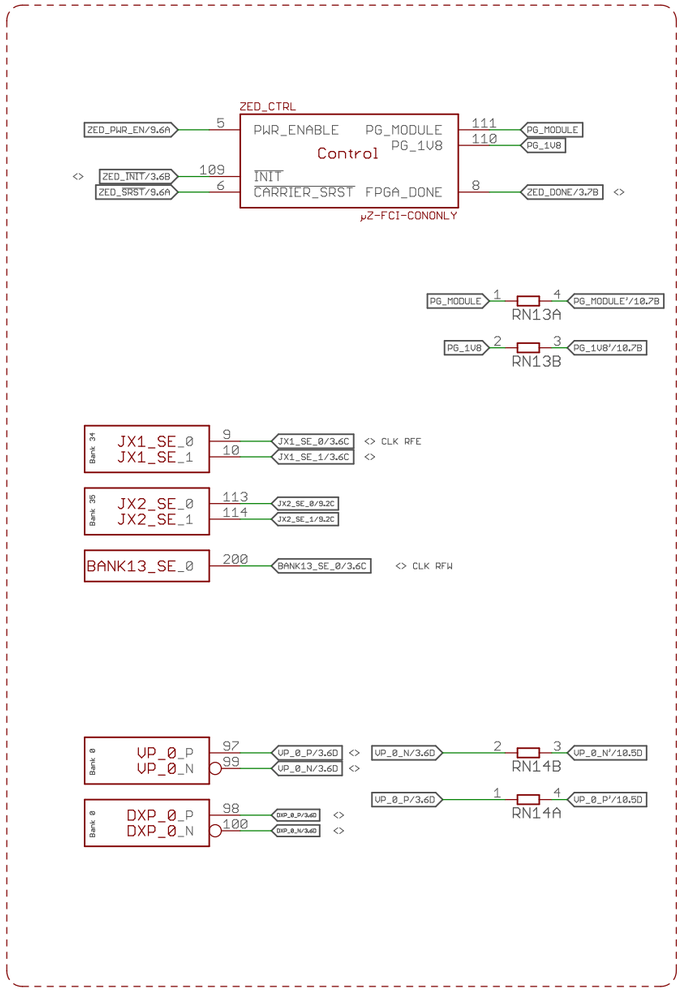

AXIOM Beta Power Board

MicroZed Control and Power

axiom_beta_power_board_v2.23

Copyright (C) 2014-2018 H.Poetzl
Licensed under CERN OHL v.1.2

>LAST_SAVED_TIME

Sheet: 2/17

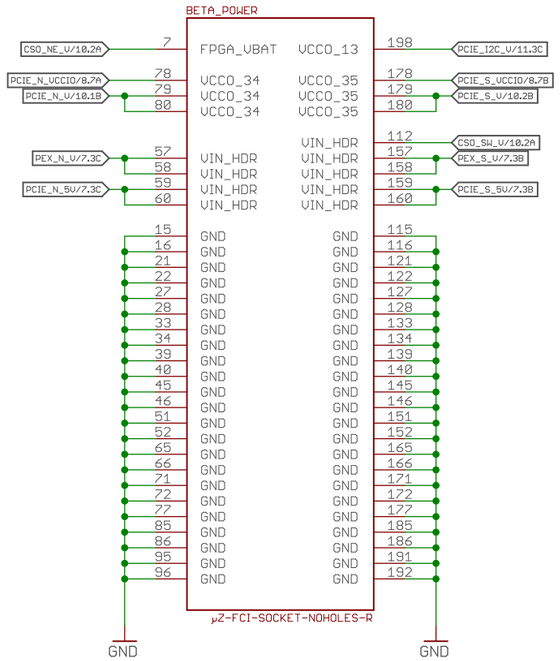

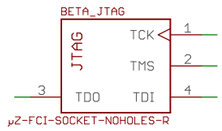

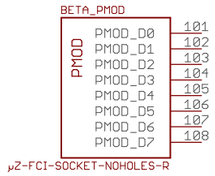

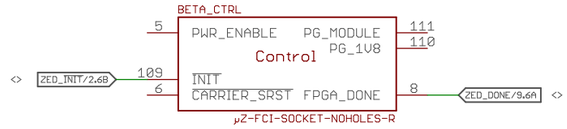

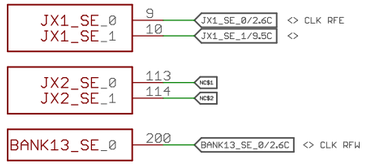

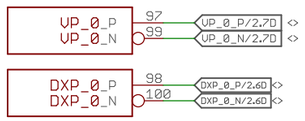

AXIOM Beta Power Board

Main Board Control and Power

axiom_beta_power_board_v2.23

>LAST_NOTE_TIME

Sheet: 3/17

Copyright (C) 2014-2018 H.Poetzl
Licensed under CERN OHL v.1.2

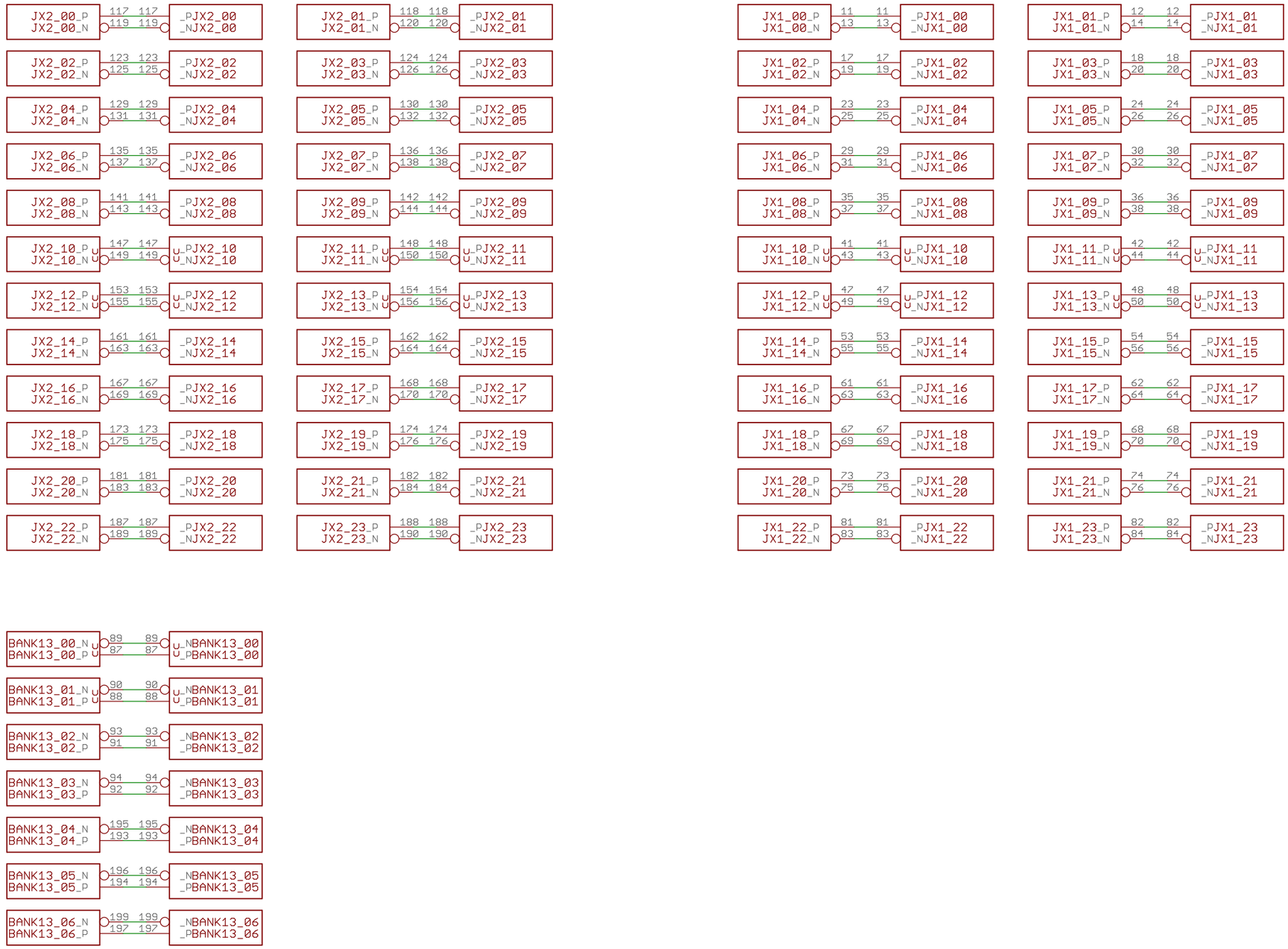

AXIOM Beta Power Board

LVDS Passthrough

axiom_beta_power_board_v2.23

>LAST_NOTE!_TIME

Sheet: 4/17

Copyright (C) 2014-2018 H.Poetzl
Licensed under CERN OHL v.1.2

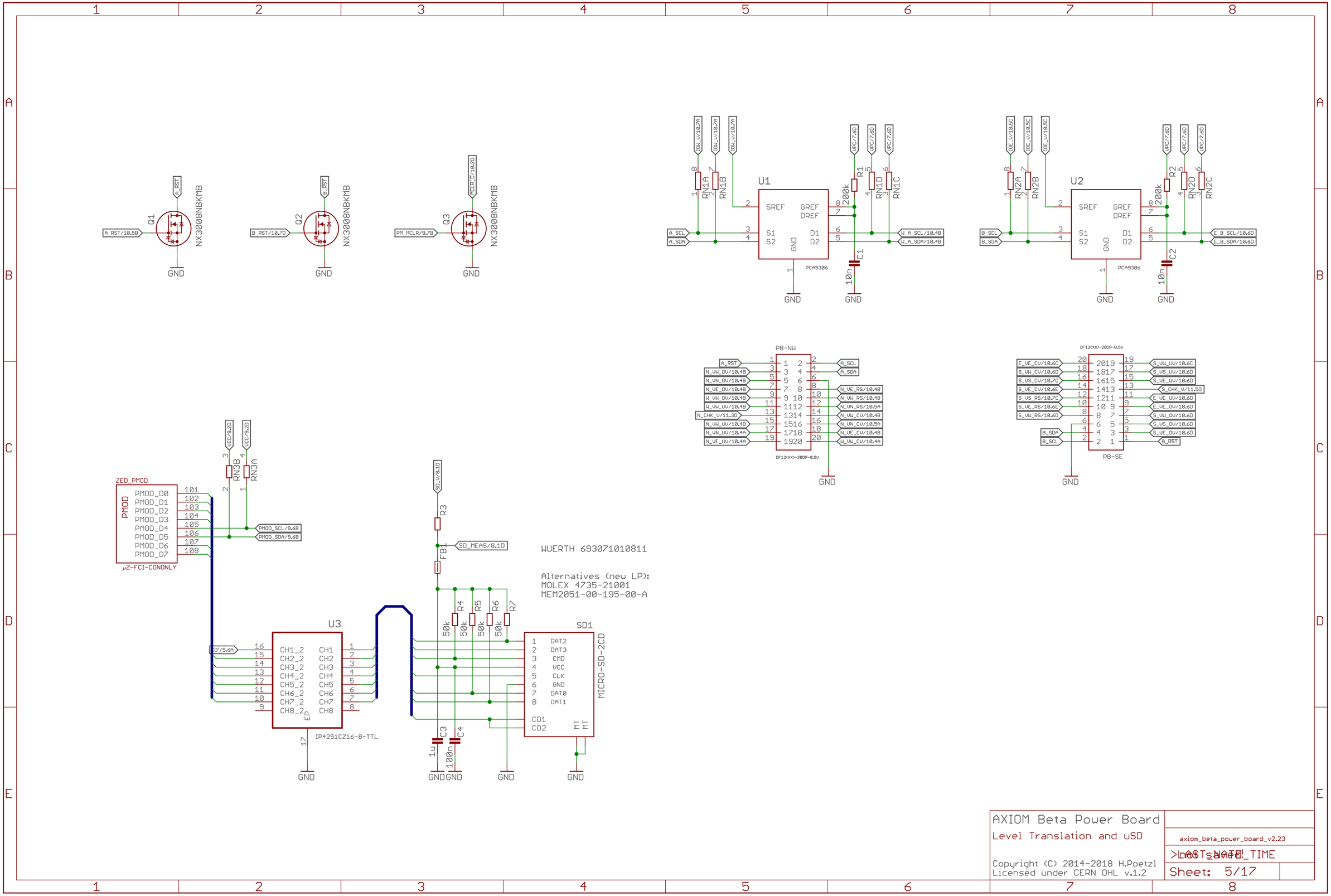
Q1
NX3008NBKM1B
A_RST/10.5B
A_RST
GND
Q2
NX3008NBKM1B
B_RST/10.7D
B_RST
GND
Q3
NX3008NBKM1B
PM_MCLR/9.7B
MCLR_C/10.2D
GND
U1
PCA9306
SREF
GREF
DREF
S1
S2
D1
D2
GND
A_SCL
A_SDA
W_A_SCL/10.4B
W_A_SDA/10.4B
RN1A
RN1B
RN1C
RN1D
R1
200k
C1
10n
IDL_U/10.7A
VRC/7.6D
U2
PCA9306
B_SCL
B_SDA
E_B_SCL/10.6D
E_B_SDA/10.6D
RN2A
RN2B
RN2C
RN2D
R2
C2
IDE_U/10.5C
PB-NW
DF12XXX-20DP-0.5V
A_RST
N_VW_OU/10.4B
N_VN_OU/10.4B
N_VE_OU/10.4B
W_VW_OU/10.4B
W_VW_UU/10.4B
N_CHK_U/11.3D
N_VW_UU/10.4B
N_VN_UU/10.4A
N_VE_UU/10.4A
A_SCL
A_SDA
N_VE_RS/10.4B
N_VW_RS/10.4B
N_VN_RS/10.5A
N_VW_CU/10.4B
N_VN_CU/10.5A
N_VE_CU/10.4B
W_VW_CU/10.4A
PB-SE
E_VE_CU/10.6C
S_VW_CU/10.6D
S_VS_CU/10.7C
S_VE_CU/10.6E
S_VS_RS/10.7C
S_VE_RS/10.6E
S_VW_RS/10.6D
B_SDA
B_SCL
S_VW_UU/10.6C
S_VS_UU/10.6D
S_VE_UU/10.6D
S_CHK_U/11.5D
E_VE_UU/10.6D
E_VE_OU/10.6D
S_VW_OU/10.6D
S_VS_OU/10.6D
S_VE_OU/10.6D
B_RST
ZED_PMOD
PMOD
PMOD_D0
PMOD_D1
PMOD_D2
PMOD_D3
PMOD_D4
PMOD_D5
PMOD_D6
PMOD_D7
µZ-FCI-CONONLY
PMOD_SCL/9.6B
PMOD_SDA/9.6B
VCC/9.2D
RN3B
RN3A
SD_U/8.1D
R3
FB1
SD_MEAS/8.1D
WUERTH 693071010811
Alternatives (new LP):
MOLEX 4735-21001
MEM2051-00-195-00-A
U3
IP4251CZ16-8-TTL
CH1_2
CH2_2
CH3_2
CH4_2
CH5_2
CH6_2
CH7_2
CH8_2
CH1
CH2
CH3
CH4
CH5
CH6
CH7
CH8
EP
R4
R5
R6
R7
50k
SD1
MICRO-SD-2CD
DAT2
DAT3
CMD
VCC
CLK
GND
DAT0
DAT1
CD1
CD2
MT
C3
C4
1u
100n
AXIOM Beta Power Board
Level Translation and uSD
axiom_beta_power_board_v2.23
Copyright (C) 2014-2018 H.Poetzl
Licensed under CERN OHL v.1.2
Sheet: 5/17

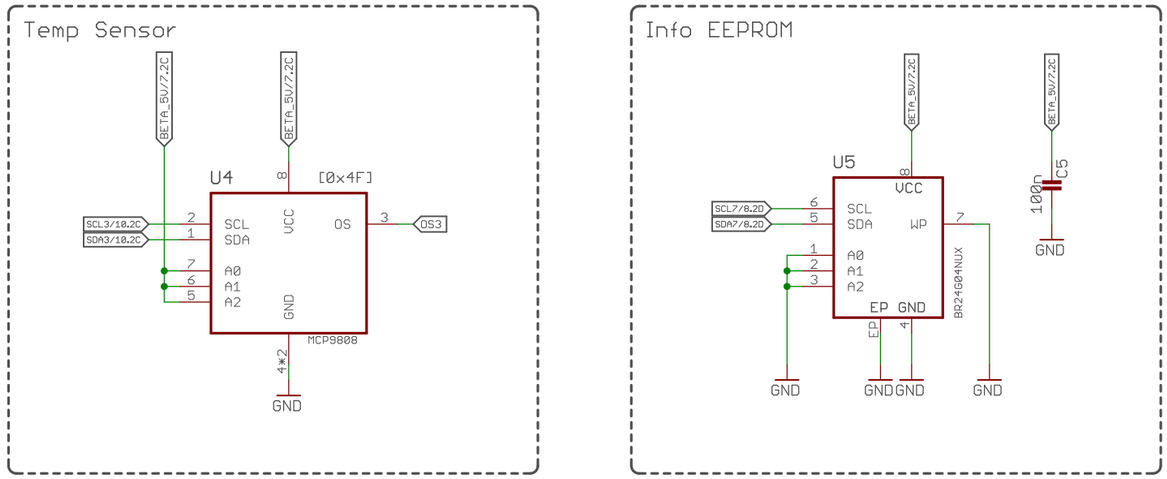

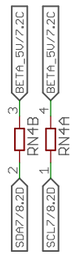

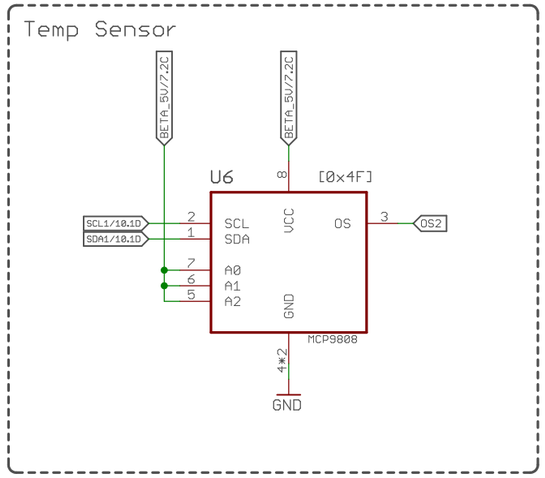

AXIOM Beta Power Board

Temperature Sensing and Data EEPROM

Copyright (C) 2014-2018 H.Poetzl
Licensed under CERN OHL v.1.2

>LAST_NATE_TIME

Sheet: 6/17

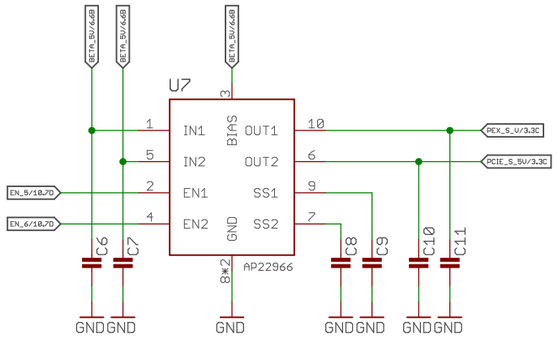

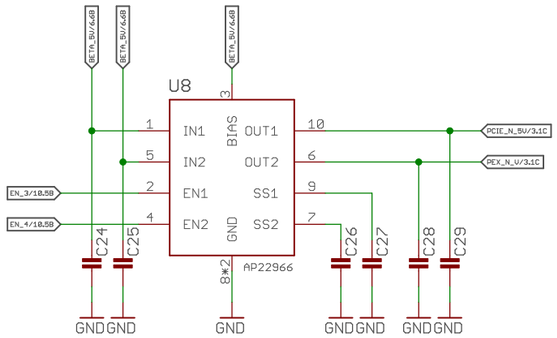

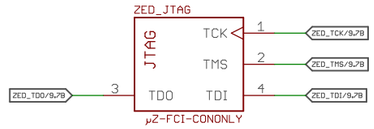

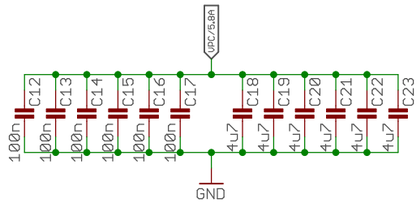

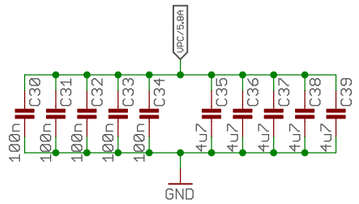

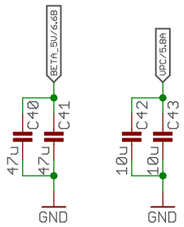

AXIOM Beta Power Board

MicroZed Power

Copyright (C) 2014-2018 H.Poetzl
Licensed under CERN OHL v.1.2

>LAST_NATE_TIME

Sheet: 7/17

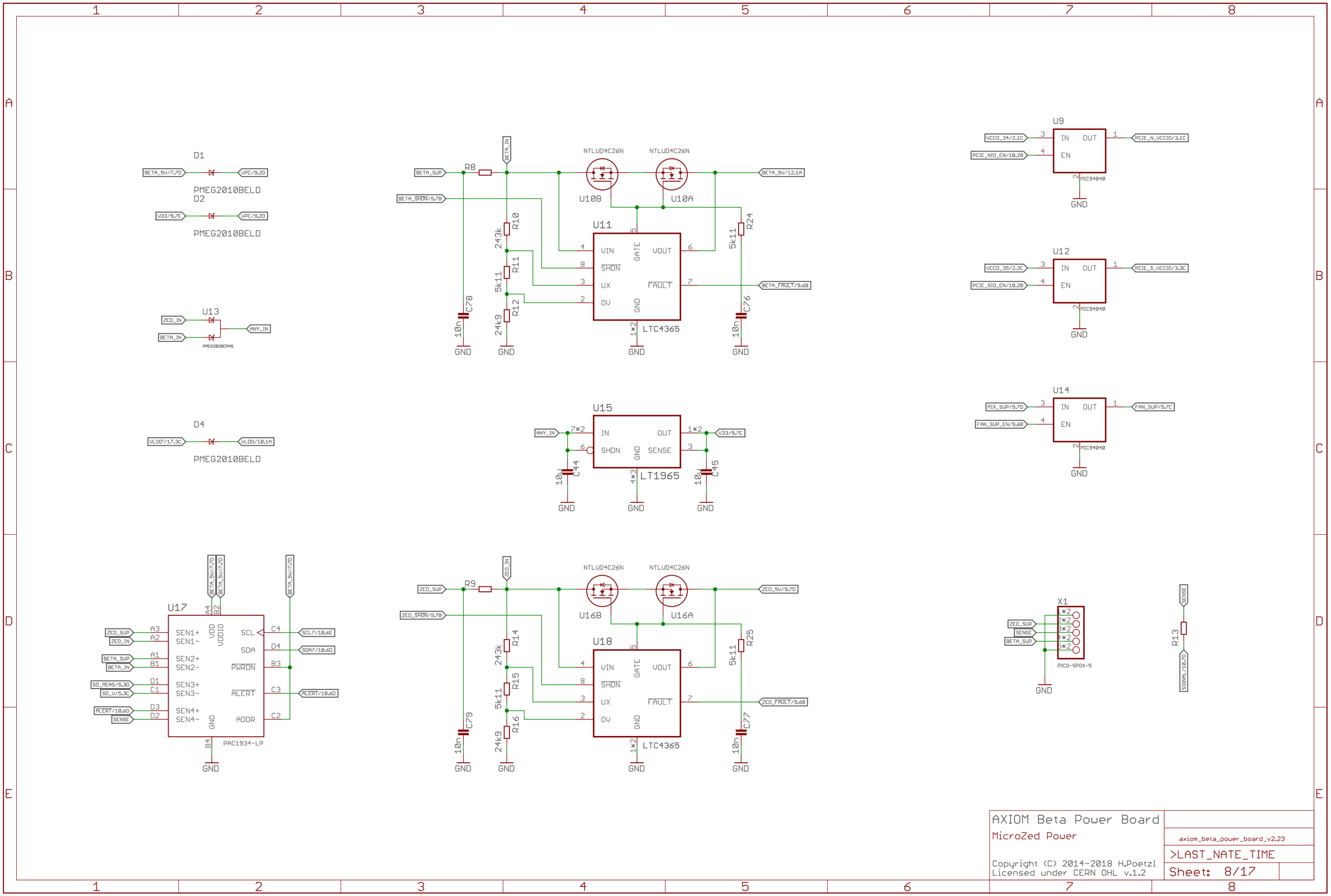

AXIOM Beta Power Board

MicroZed Power

axiom_beta_power_board_v2.23

>LAST_NATE_TIME

Sheet: 8/17

Copyright (C) 2014-2018 H.Poetzl
Licensed under CERN OHL v.1.2

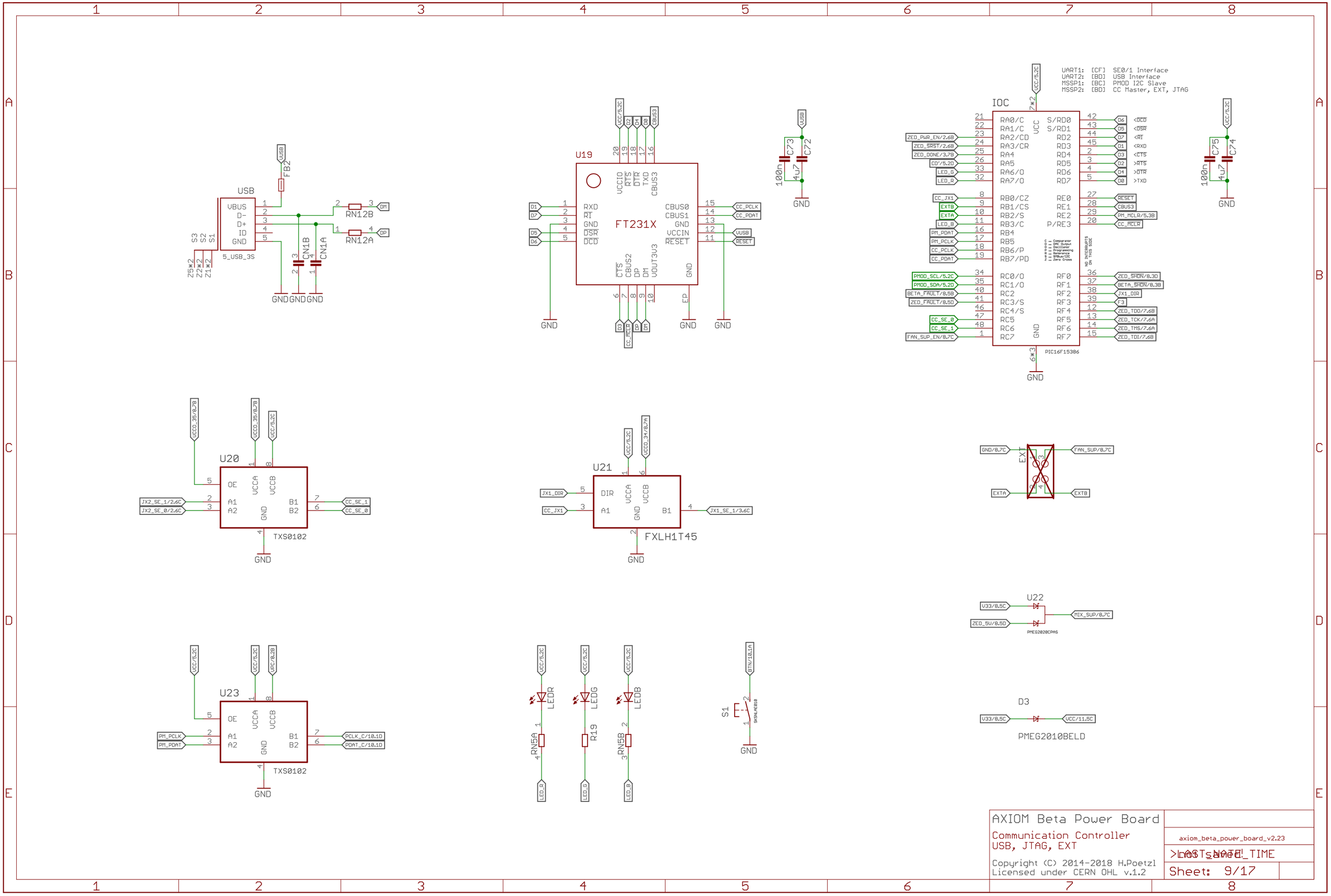
USB
VBUS
D-
D+
ID
GND
5_USB_3S
FB2
RN12B
RN12A
CN1B
CN1A
U19
FT231X
RXD
RI
GND
DSR
DCD
CTS
CBUS2
DP
DM
VOUT3V3
CBUS0
CBUS1
VCCIO
RTS
DTR
TXD
CBUS3
VCCIN
RESET
EP
C73
C72
IOC
PIC16F15386
UART1: [CF] SE0/1 Interface
UART2: [BD] USB Interface
MSSP1: [BC] PMOD I2C Slave
MSSP2: [BD] CC Master, EXT, JTAG
C75
C74
U20
TXS0102
U21
FXLH1T45
EXT
U22
PMEG2020CPAS
U23
TXS0102
LEDR
LEDG
LEDB
RN5A
R19
RN5B
S1
D3
PMEG2010BELD
AXIOM Beta Power Board
Communication Controller
USB, JTAG, EXT
Copyright (C) 2014-2018 H.Poetzl
Licensed under CERN OHL v.1.2
axiom_beta_power_board_v2.23
Sheet: 9/17

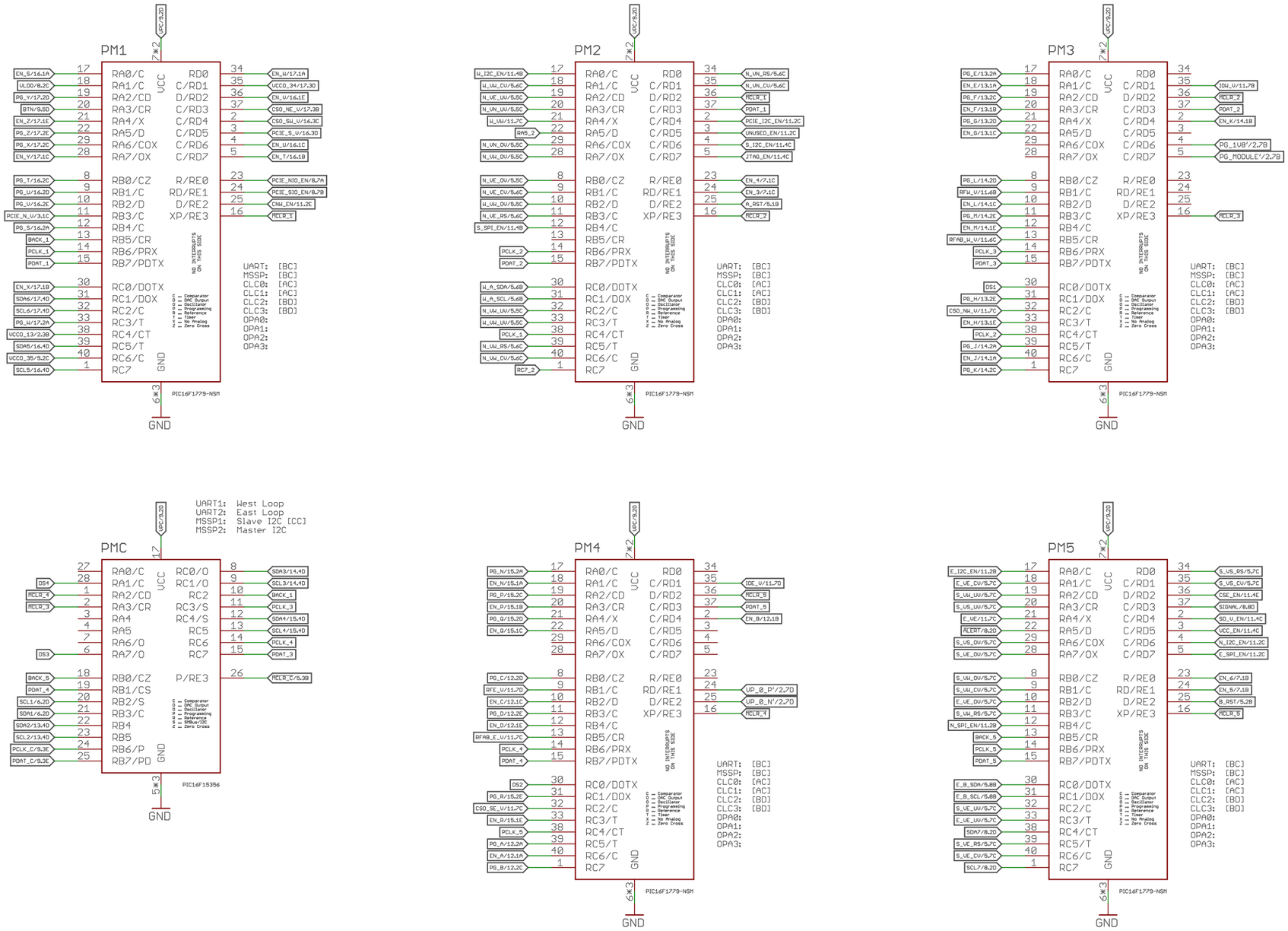

AXIOM Beta Power Board

Interface Power and Control

axiom_beta_power_board_v2.23

>LAST_SAVED_TIME

Sheet: 10/17

Copyright (C) 2014-2018 H.Poetzl
Licensed under CERN OHL v.1.2

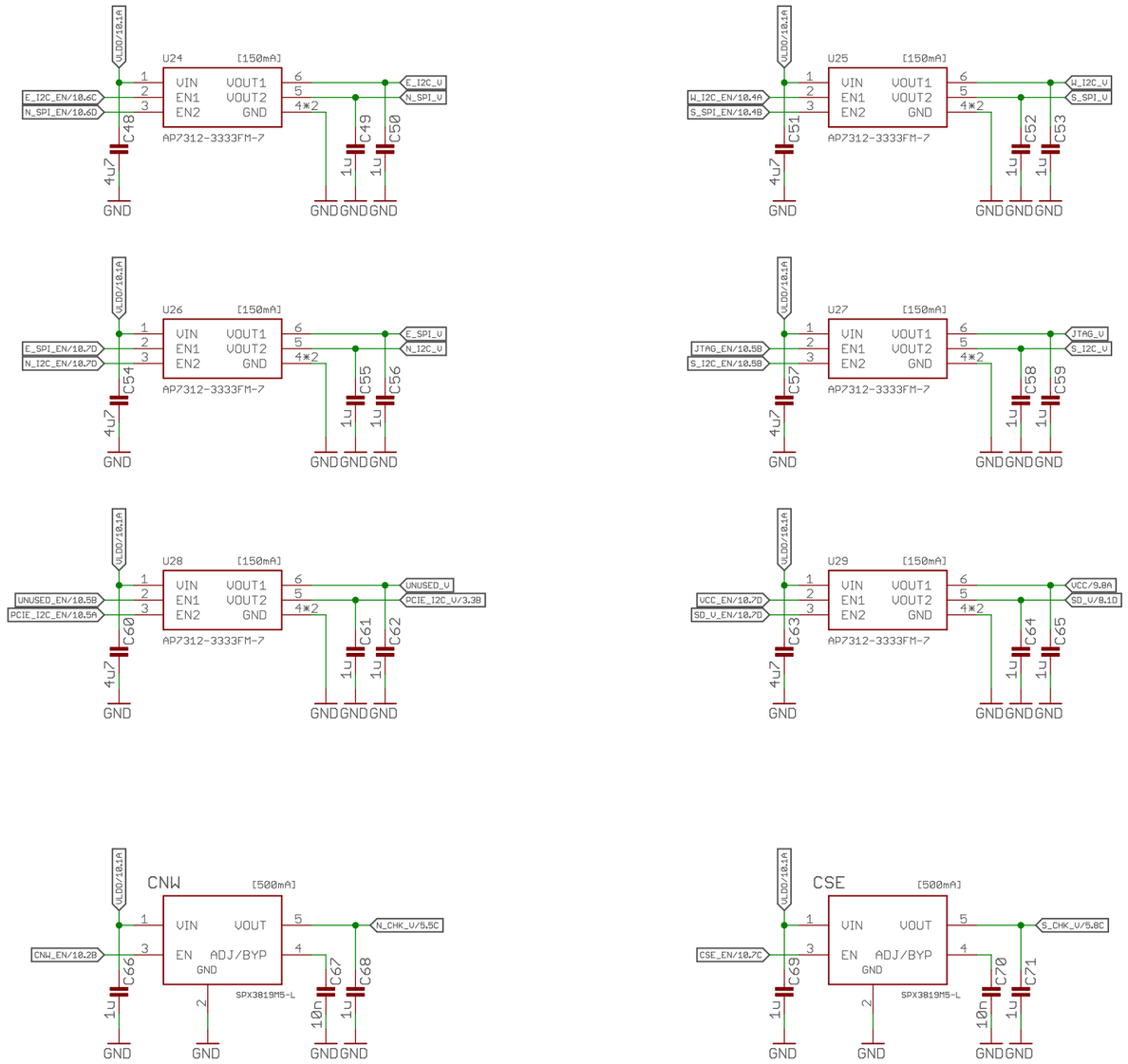

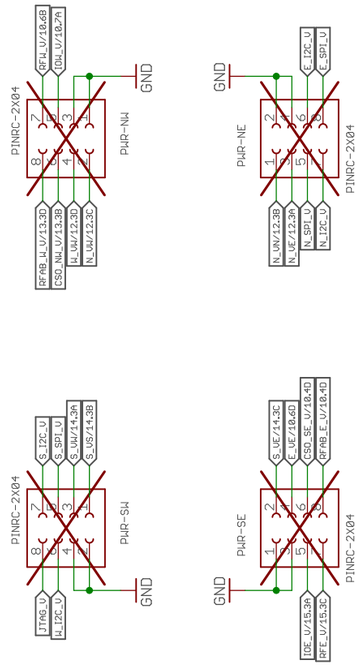

AXIOM Beta Power Board

Interface Power and Control

axiom_beta_power_board_v2.23

Copyright (C) 2014-2018 H.Poetzl
Licensed under CERN OHL v.1.2

>LAST_SAVED_TIME

Sheet: 11/17

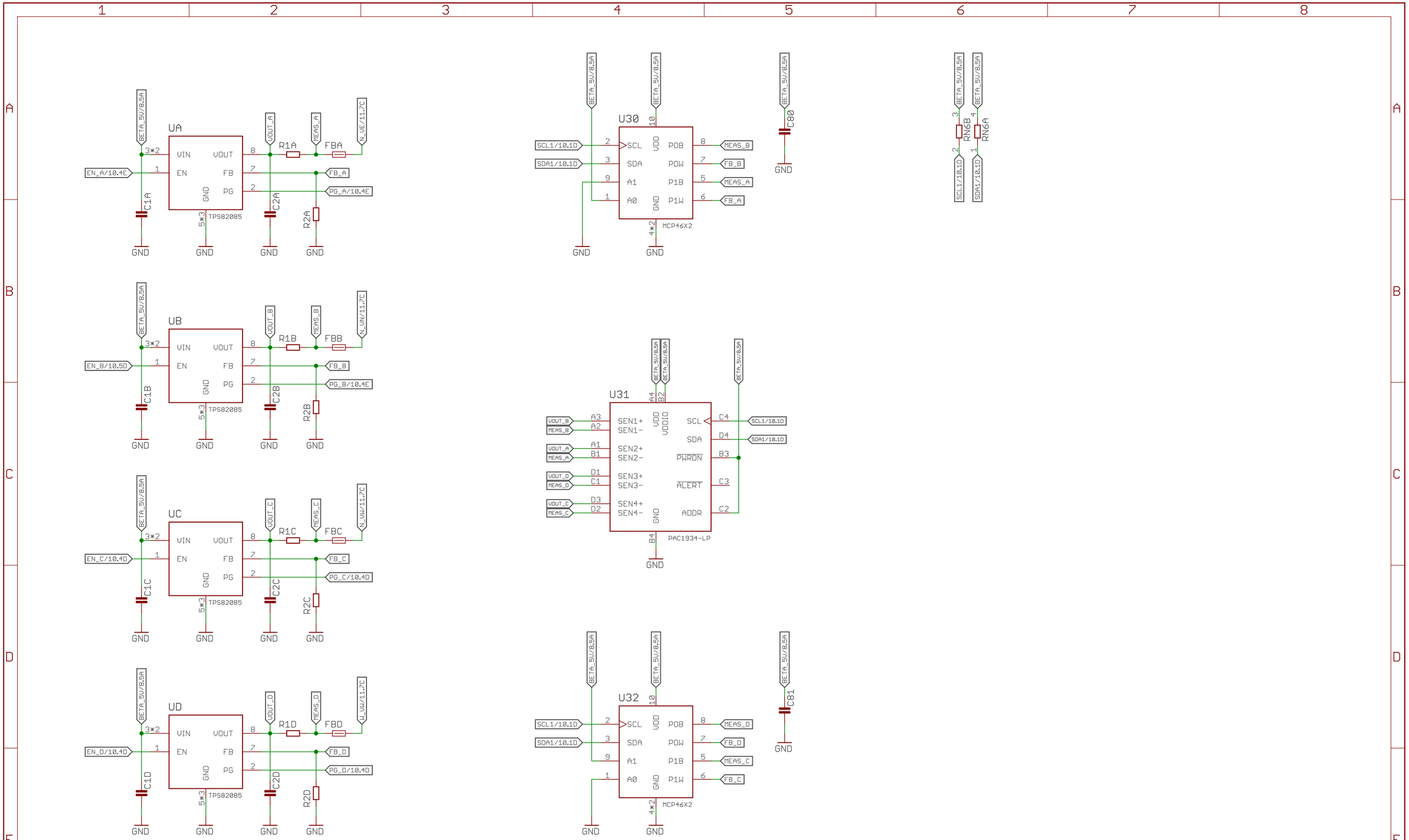

AXIOM Beta Power Board

MicroZed Power

axiom_beta_power_board_v2.23

Copyright (C) 2014-2018 H.Poetzl
Licensed under CERN OHL v.1.2

>LAST_NATE_TIME

Sheet: 12/17

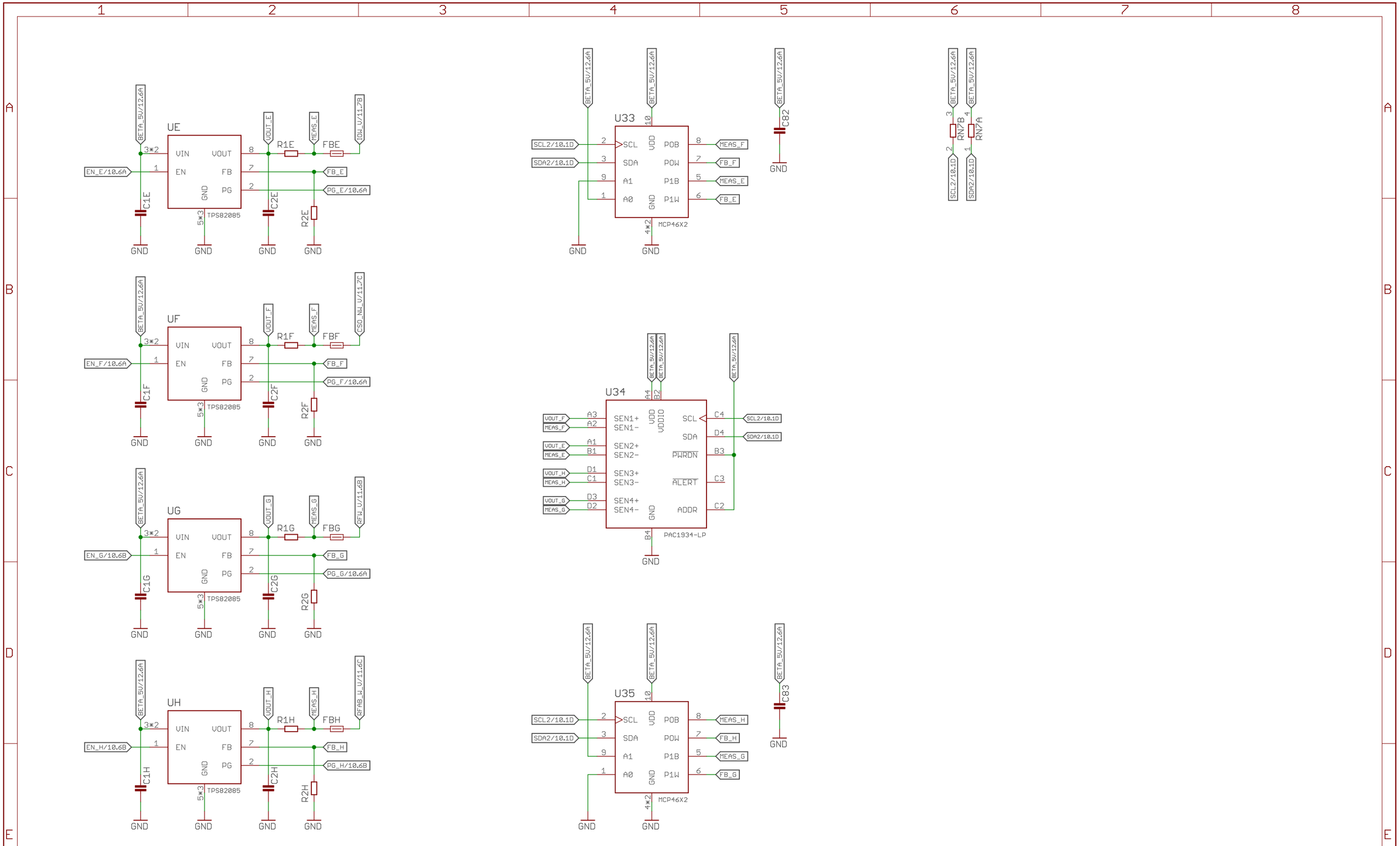

AXIOM Beta Power Board

MicroZed Power

axiom_beta_power_board_v2.23

Copyright (C) 2014-2018 H.Poetzl
Licensed under CERN OHL v.1.2

>LAST_NATE_TIME

Sheet: 13/17

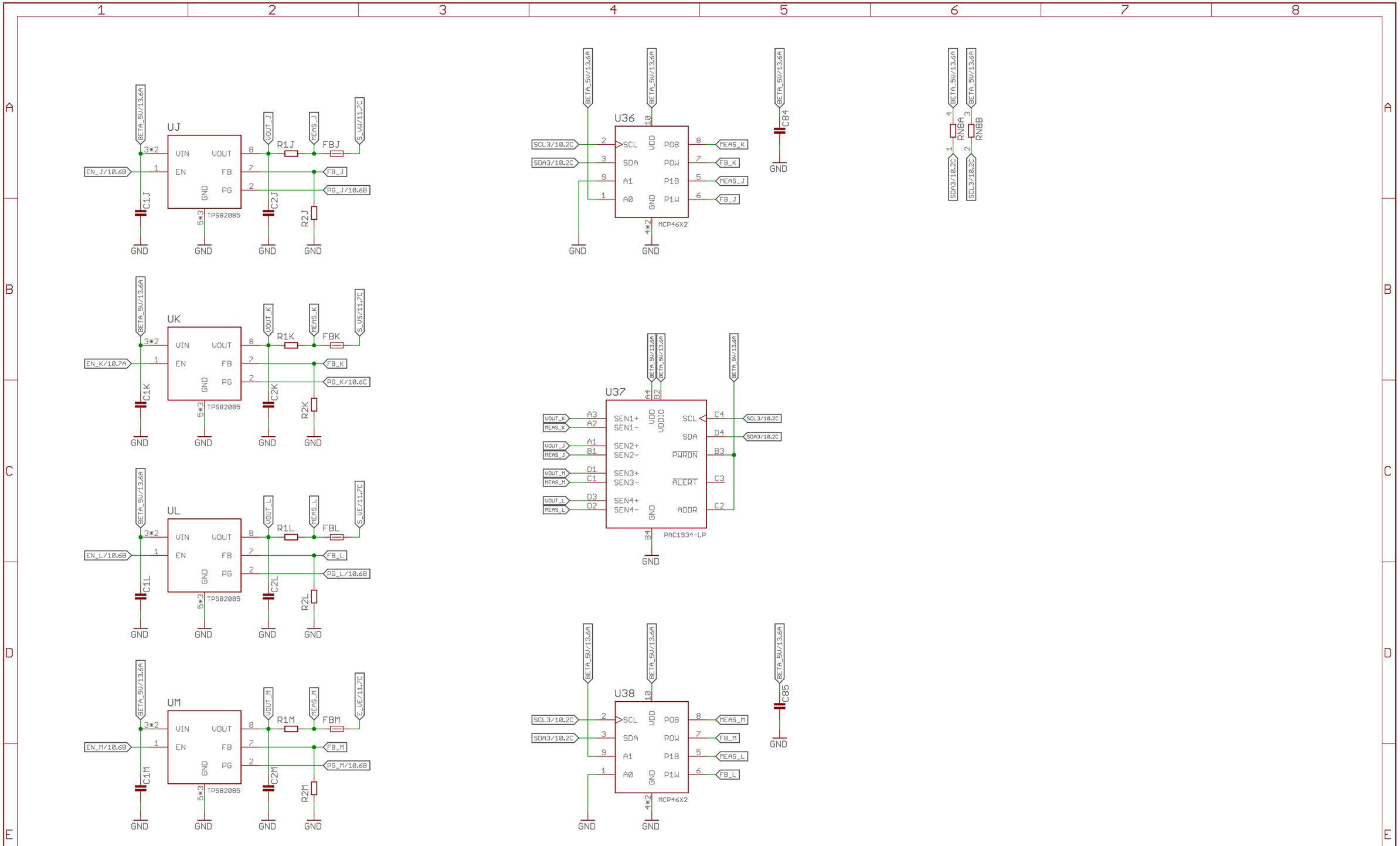

AXIOM Beta Power Board

MicroZed Power

axiom_beta_power_board_v2.23

Copyright (C) 2014-2018 H.Poetzl
Licensed under CERN OHL v.1.2

>LAST_NATE_TIME

Sheet: 14/17

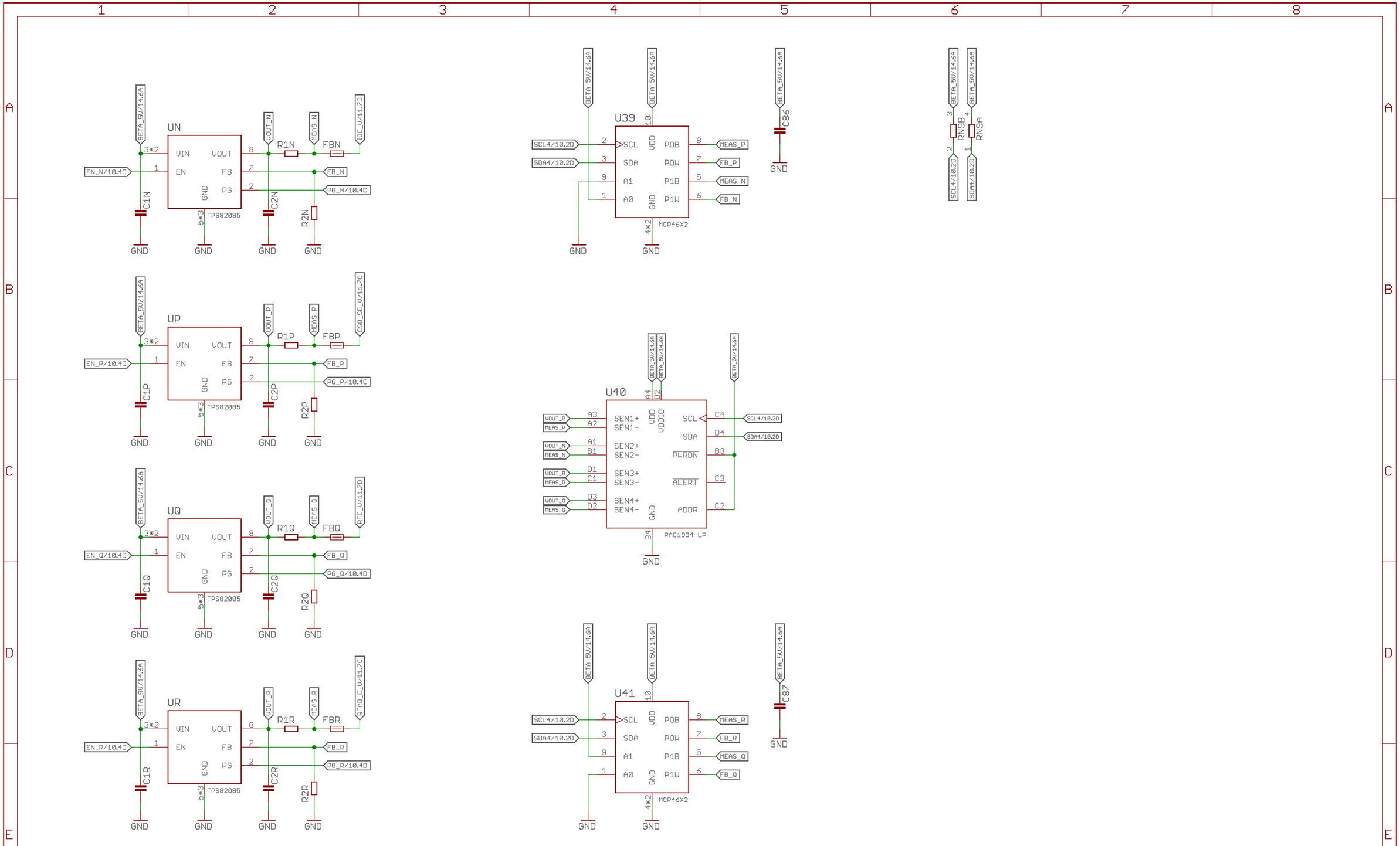

AXIOM Beta Power Board

MicroZed Power

axiom_beta_power_board_v2.23

Copyright (C) 2014-2018 H.Poetzl
Licensed under CERN OHL v.1.2

>LAST_NATE_TIME

Sheet: 15/17

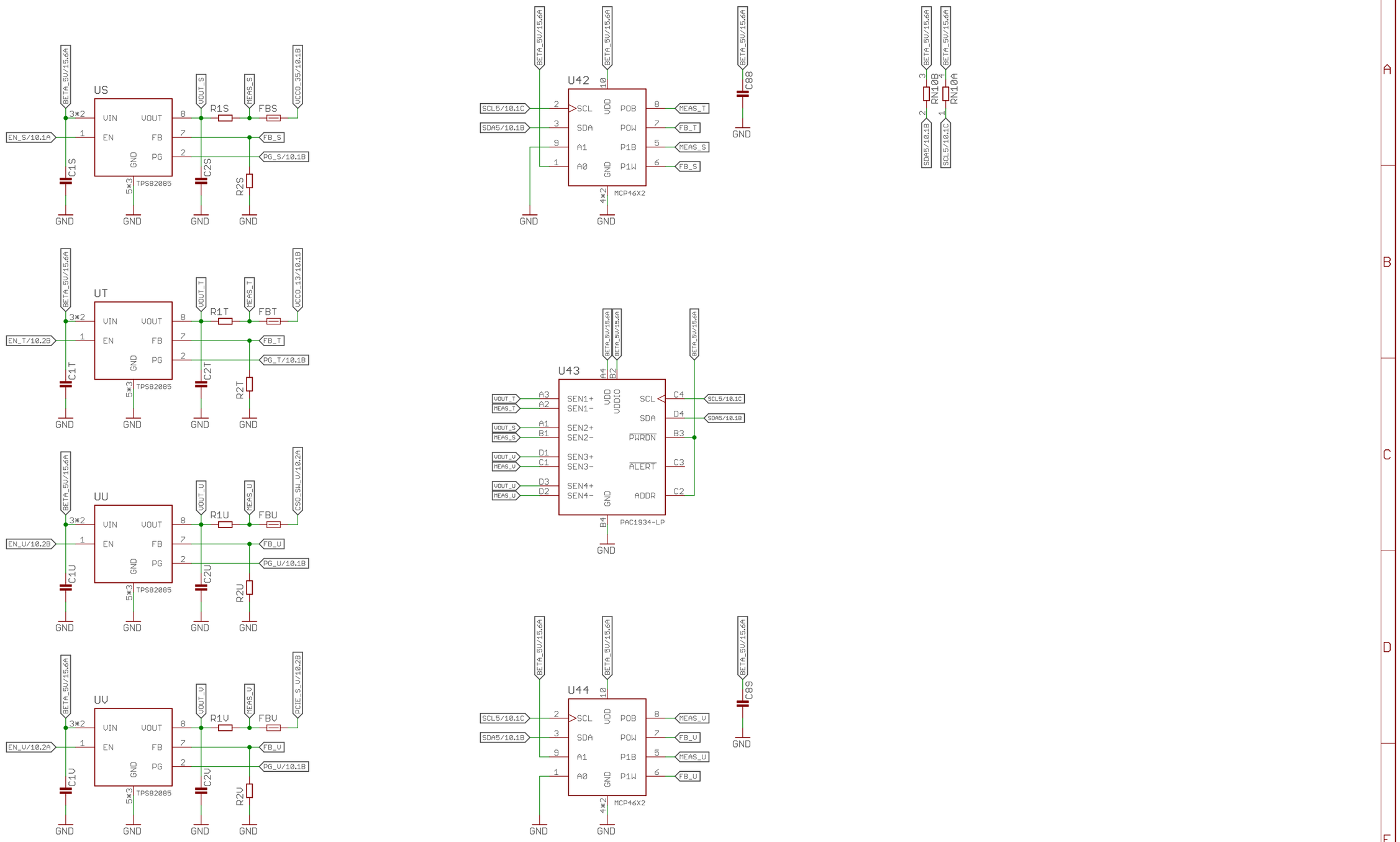

AXIOM Beta Power Board

MicroZed Power

axiom_beta_power_board_v2.23

Copyright (C) 2014-2018 H.Poetzl
Licensed under CERN OHL v.1.2

>LAST_NATE_TIME

Sheet: 16/17

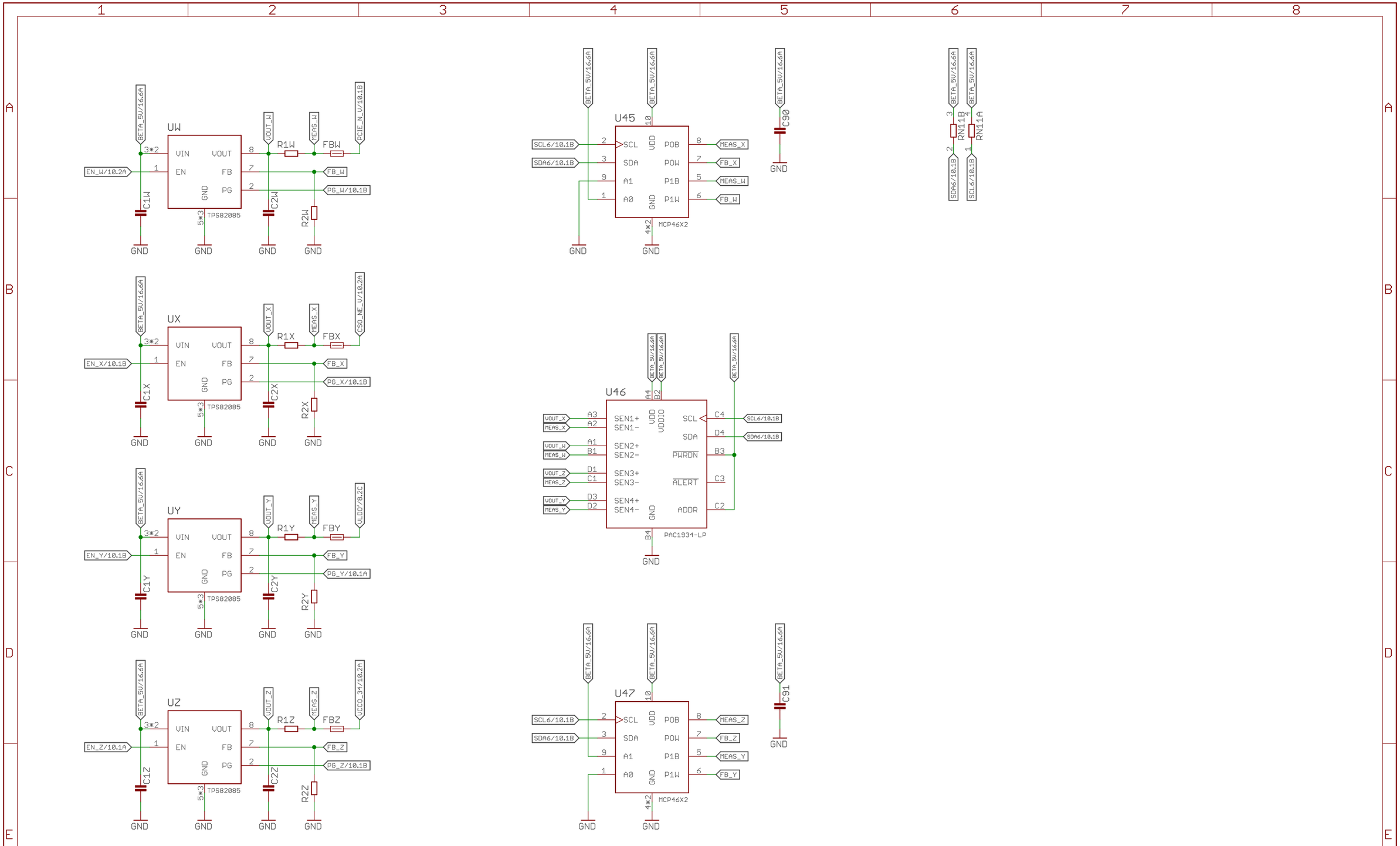
UW
UX
UY
UZ
VIN
VOUT
EN
FB
GND
PG
TPS82085
R1W
FBW
R2W
C1W
C2W
R1X
FBX
R2X
C1X
C2X
R1Y
FBY
R2Y
C1Y
C2Y
R1Z
FBZ
R2Z
C1Z
C2Z
EN_W/10.2A
EN_X/10.1B
EN_Y/10.1B
EN_Z/10.1A
PG_W/10.1B
PG_X/10.1B
PG_Y/10.1A
PG_Z/10.1B
FB_W
FB_X
FB_Y
FB_Z
VOUT_W
VOUT_X
VOUT_Y
VOUT_Z
MEAS_W
MEAS_X
MEAS_Y
MEAS_Z
PCIE_N_V/10.1B
CSO_NE_V/10.2A
VLDO'/8.2C
VCCO_34/10.2A
BETA_5V/16.6A
U45
U46
U47
SCL
SDA
A1
A0
POB
POW
P1B
P1W
MCP46X2
SCL6/10.1B
SDA6/10.1B
C90
C91
RN11B
RN11A
SEN1+
SEN1-
SEN2+
SEN2-
SEN3+
SEN3-
SEN4+
SEN4-
PWRDN
ALERT
ADDR
PAC1934-LP
VDD
VDDIO
AXIOM Beta Power Board
MicroZed Power
axiom_beta_power_board_v2.23
>LAST_NATE_TIME
Sheet: 17/17
Copyright (C) 2014-2018 H.Poetzl
Licensed under CERN OHL v.1.2