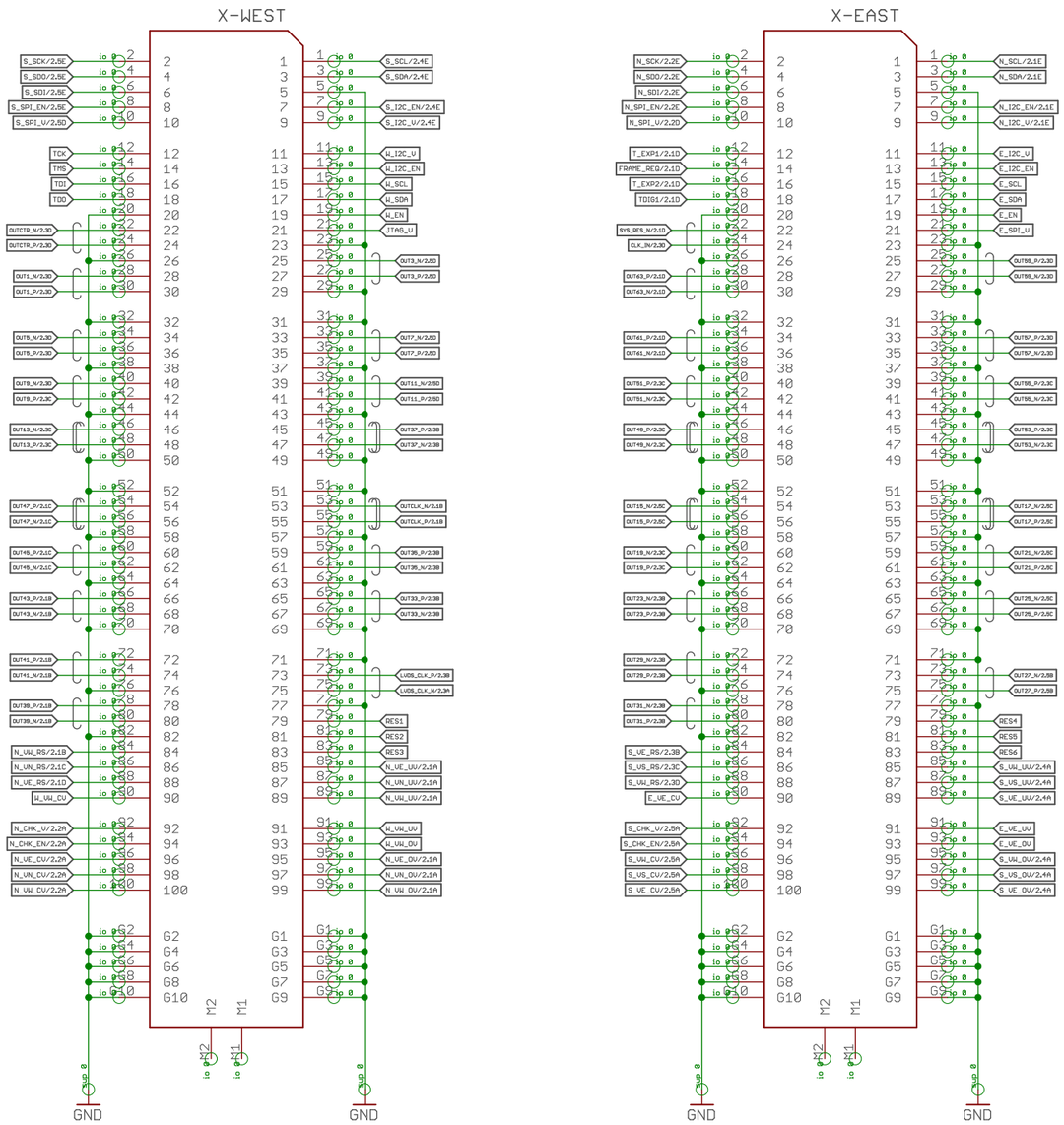

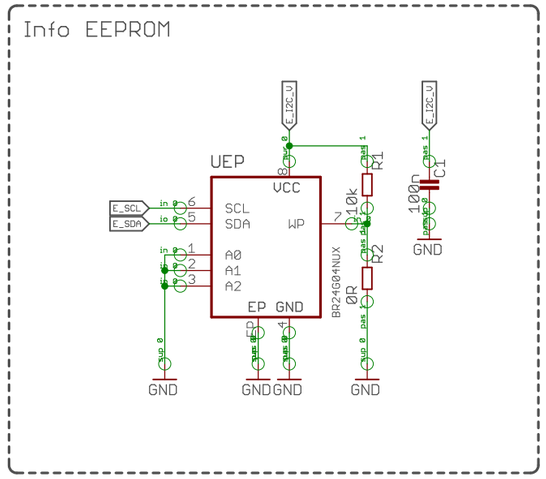

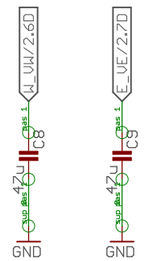

AXIOM Beta Dummy Interf.

Beta Board Interface

E_SPI_U assumed equal to LVDS

Copyright (C) 2014-2020 H.Poetzl
Licensed under CERN OHL v.1.2

axiom_beta_interface_dummy_v0.13_r1.5

not saved!

Sheet: 1/3

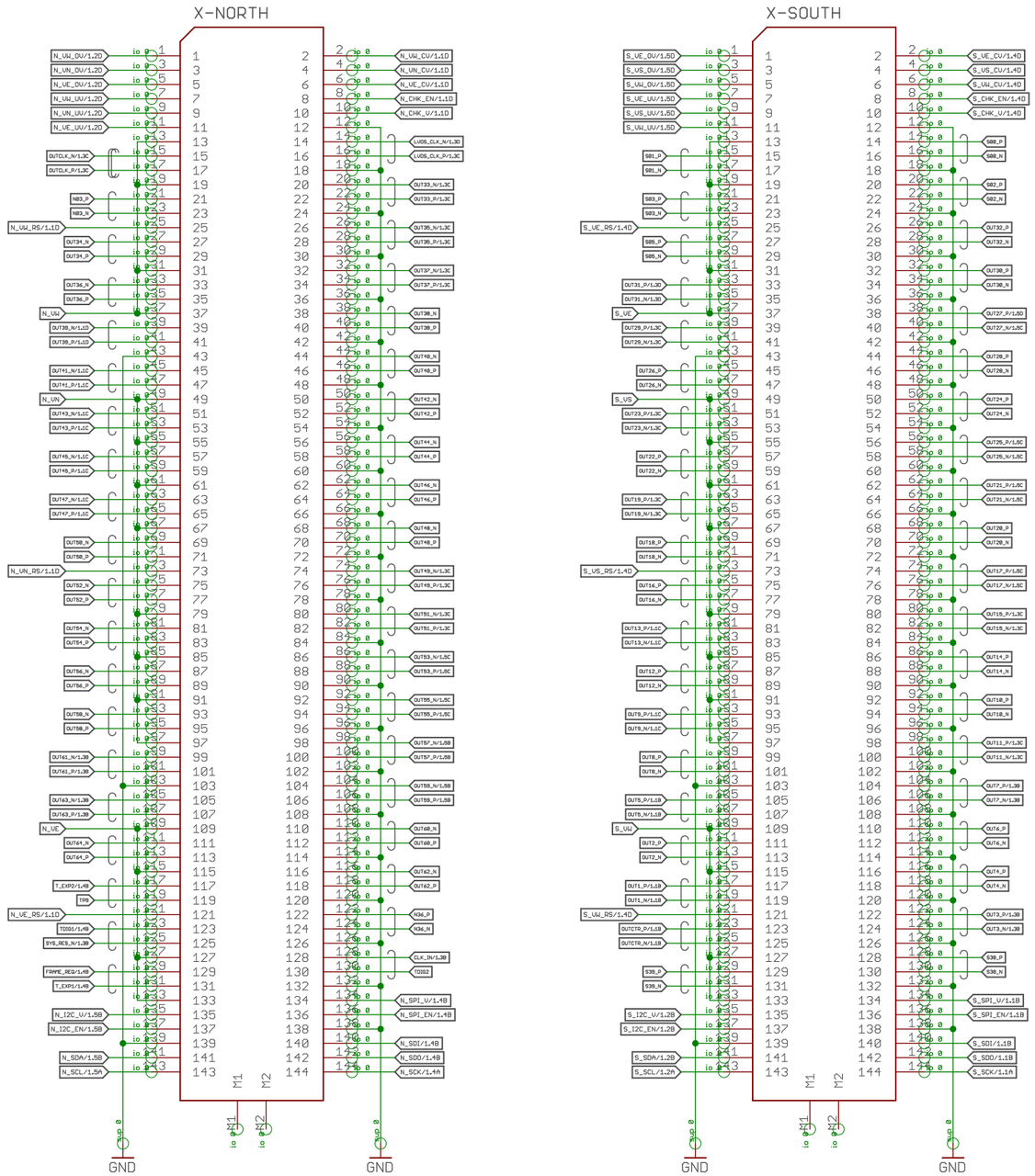

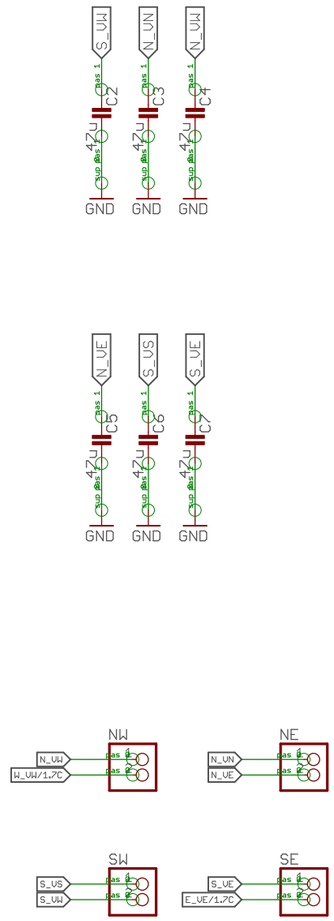

AXIOM Beta Dummy Interf.

CMV12000 Interface

32 LVDS channels (16/16) con.

Copyright (C) 2014-2020 H.Poetzl
Licensed under CERN OHL v.1.2

axiom_beta_interface_dummy_v0.13_r1.5

not saved!

Sheet: 2/3

AXIOM Beta Dummy Interf.

Fiducials

Copyright (C) 2014-2020 H.Poetzl
Licensed under CERN OHL v.1.2

axiom_beta_interface_dummy_v0.13_r1.5

not saved!

Sheet: 3/3