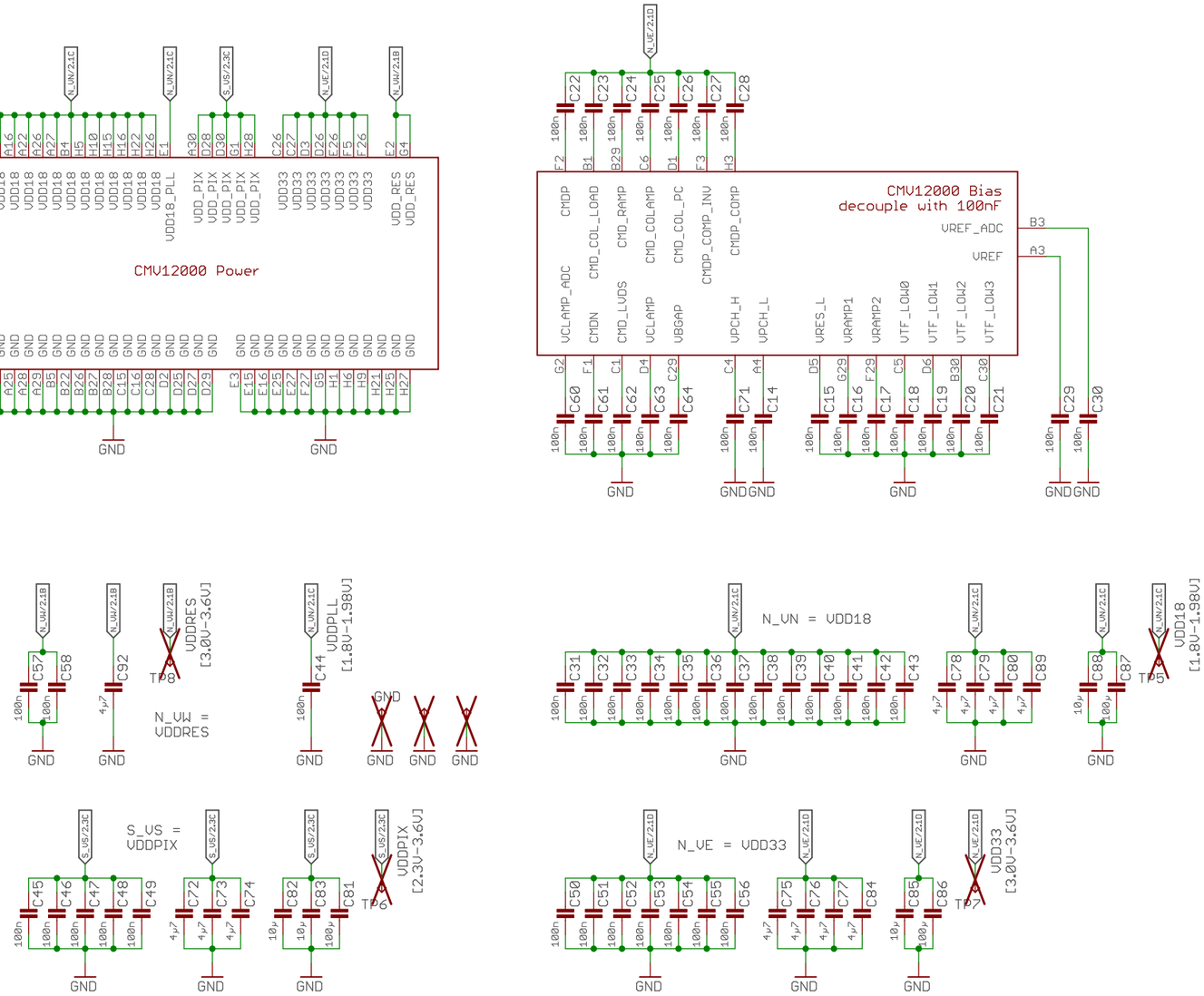


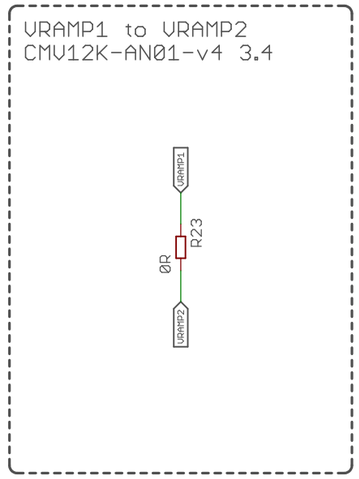


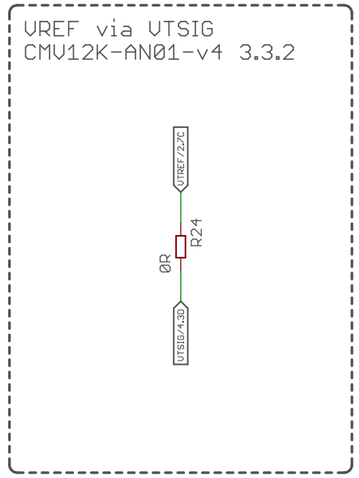


AXIOM Beta CMV12000

Power and Decoupling

4 Voltages

Copyright (C) 2014-2015 H.Poetzl
Licensed under CERN OHL v.1.2

axiom_beta_sensor_cmv12000_thr_v0.16_r1.7c

not saved!

Sheet: 1/5

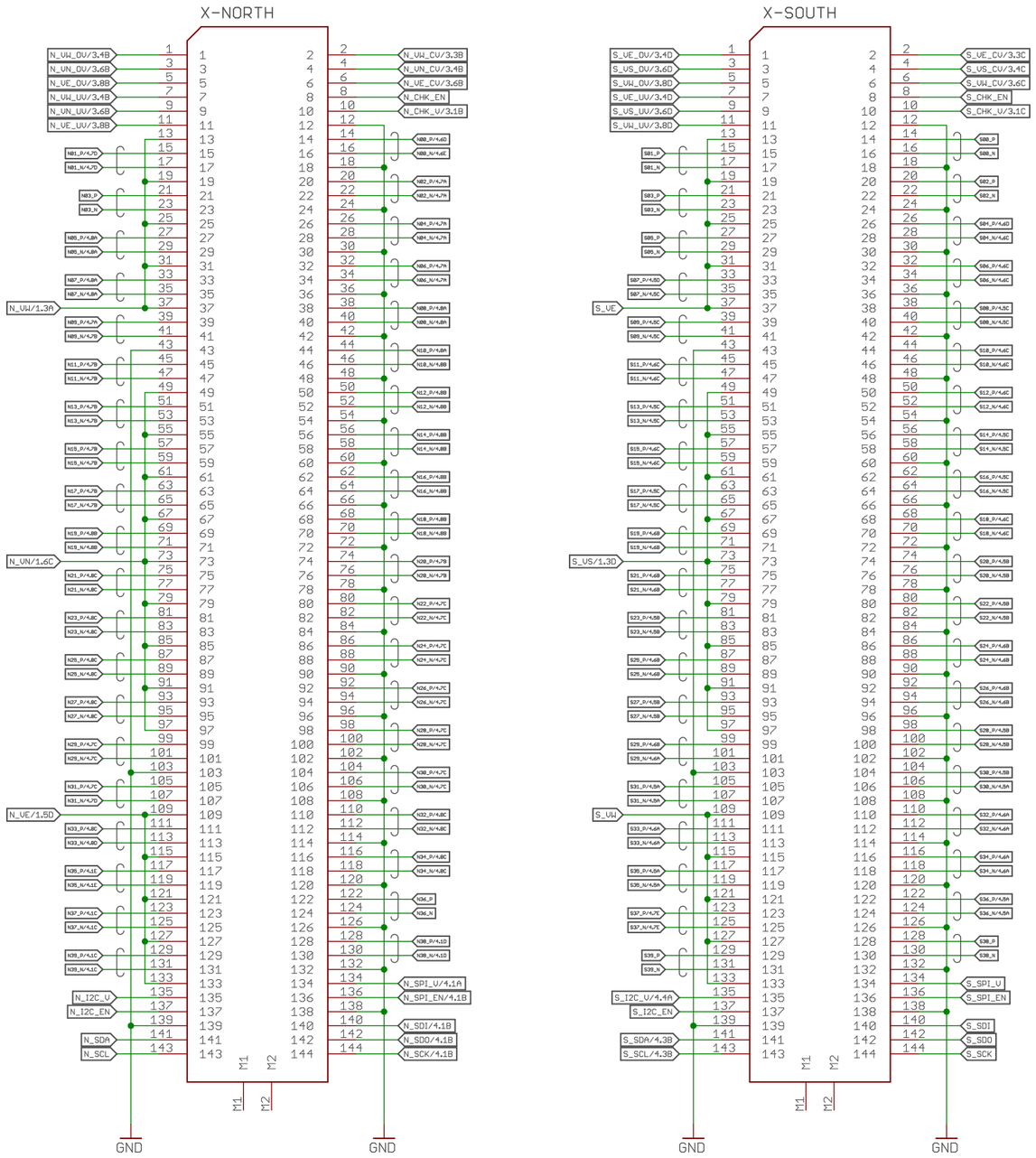


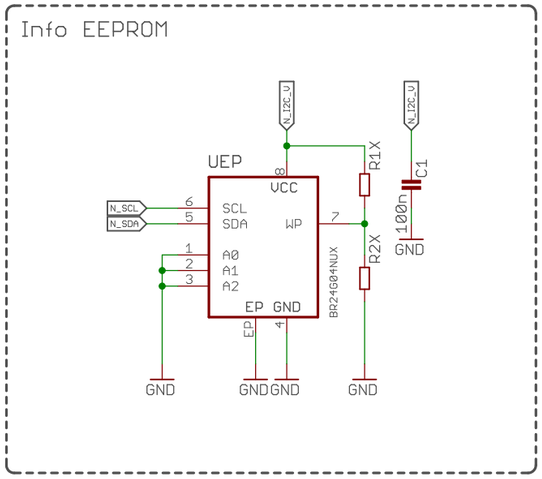


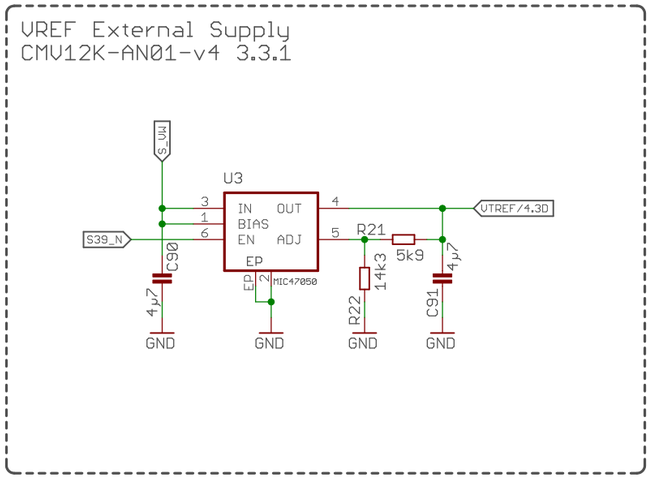


AXIOM Beta CMV12000

Interface, Info and VREF

Optional VREF Supply

Copyright (C) 2014-2015 H.Poetzl
Licensed under CERN OHL v.1.2

axiom_beta_sensor_cmv12000_thr_v0.16_r1.7c

not saved!

Sheet: 2/5

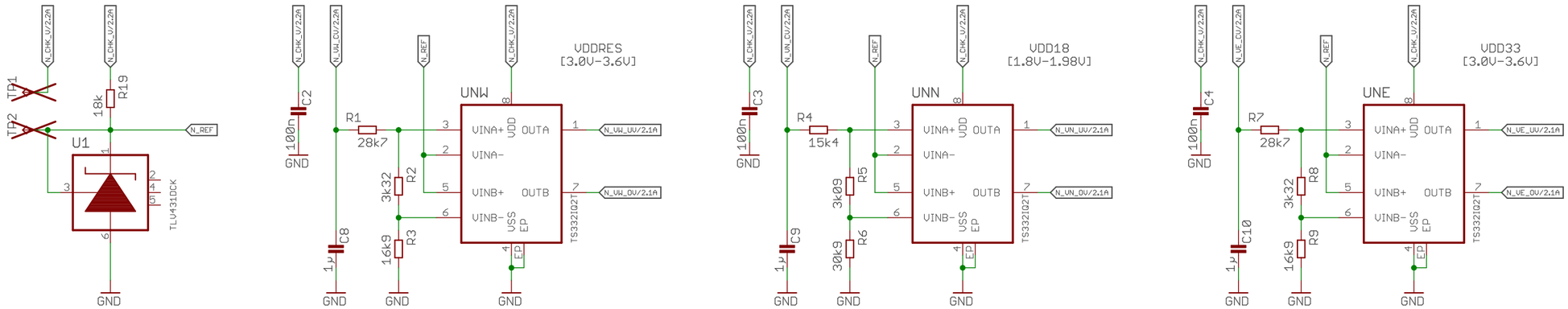


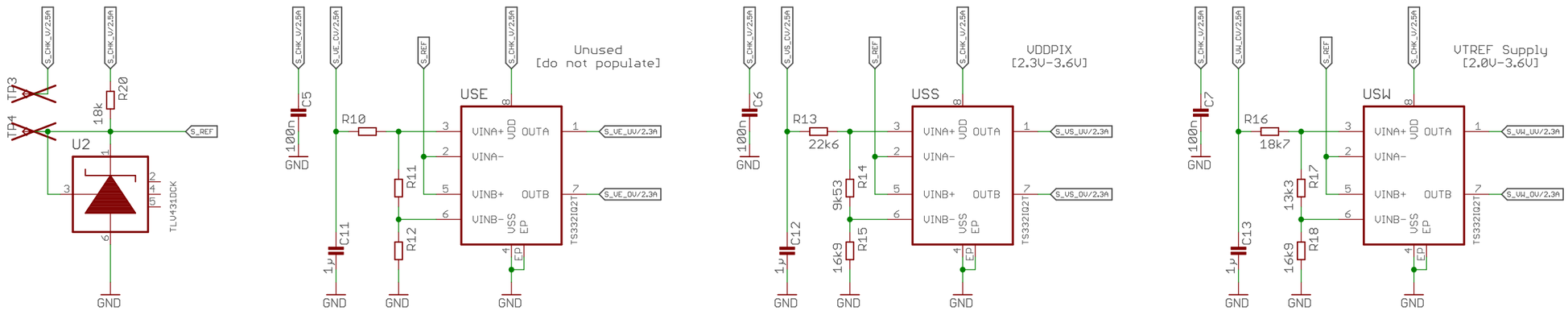


AXIOM Beta CMV12000

Over/Under Voltage Check

4/5 Voltages

Copyright (C) 2014-2020 H.Poetzl
Licensed under CERN OHL v.1.2

axiom_beta_sensor_cmv12000_tht_v0.16_r1.7c

not saved!

Sheet: 3/5

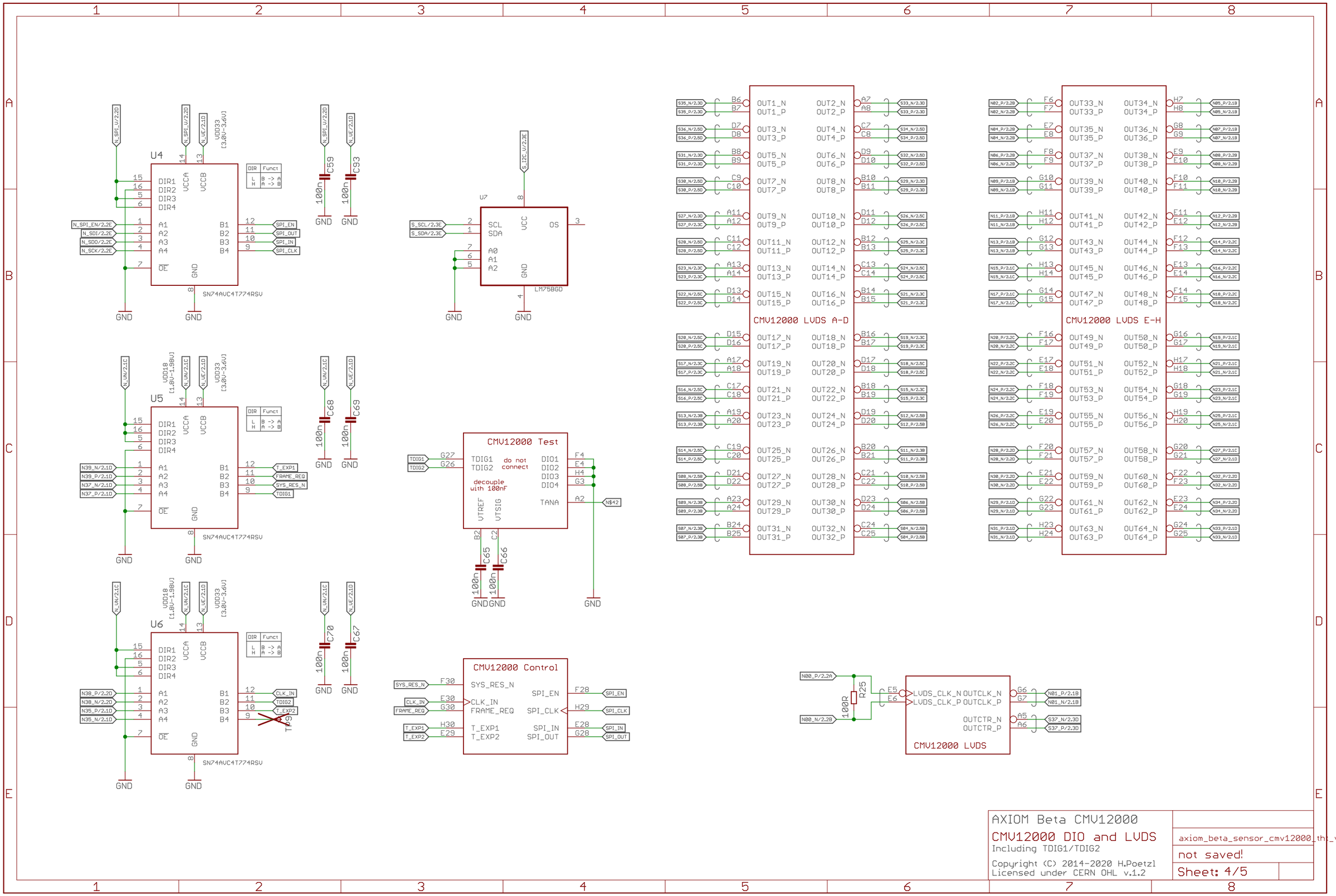
U4
SN74AUC4T774RSV
U5
SN74AUC4T774RSV
U6
SN74AUC4T774RSV
U7
LM75BGD
CMV12000 Test
do not connect
decouple with 100nF
CMV12000 Control
CMV12000 LVDS A-D
CMV12000 LVDS E-H
CMV12000 LVDS
R25
100R
C59
C93
C68
C69
C70
C67
C65
C66
GND
AXIOM Beta CMV12000
CMV12000 DIO and LVDS
Including TDIG1/TDIG2
Copyright (C) 2014-2020 H.Poetzl
Licensed under CERN OHL v.1.2
axiom_beta_sensor_cmv12000_tht_v0.16_r1.7c
not saved!
Sheet: 4/5

FID1
FIDUCIAL

FID2
FIDUCIAL

FID3
FIDUCIAL

FID4
FIDUCIAL

FID5
FIDUCIAL-3A

FID6
FIDUCIAL-3A

FID7
FIDUCIAL-3A

FID8
FIDUCIAL-3A

AXIOM Beta CMV12000

Fiducials

Copyright (C) 2014-2020 H.Poetzl
Licensed under CERN OHL v.1.2

axiom_beta_sensor_cmv12000_tht_v0.16_r1.7c

not saved!

Sheet: 5/5