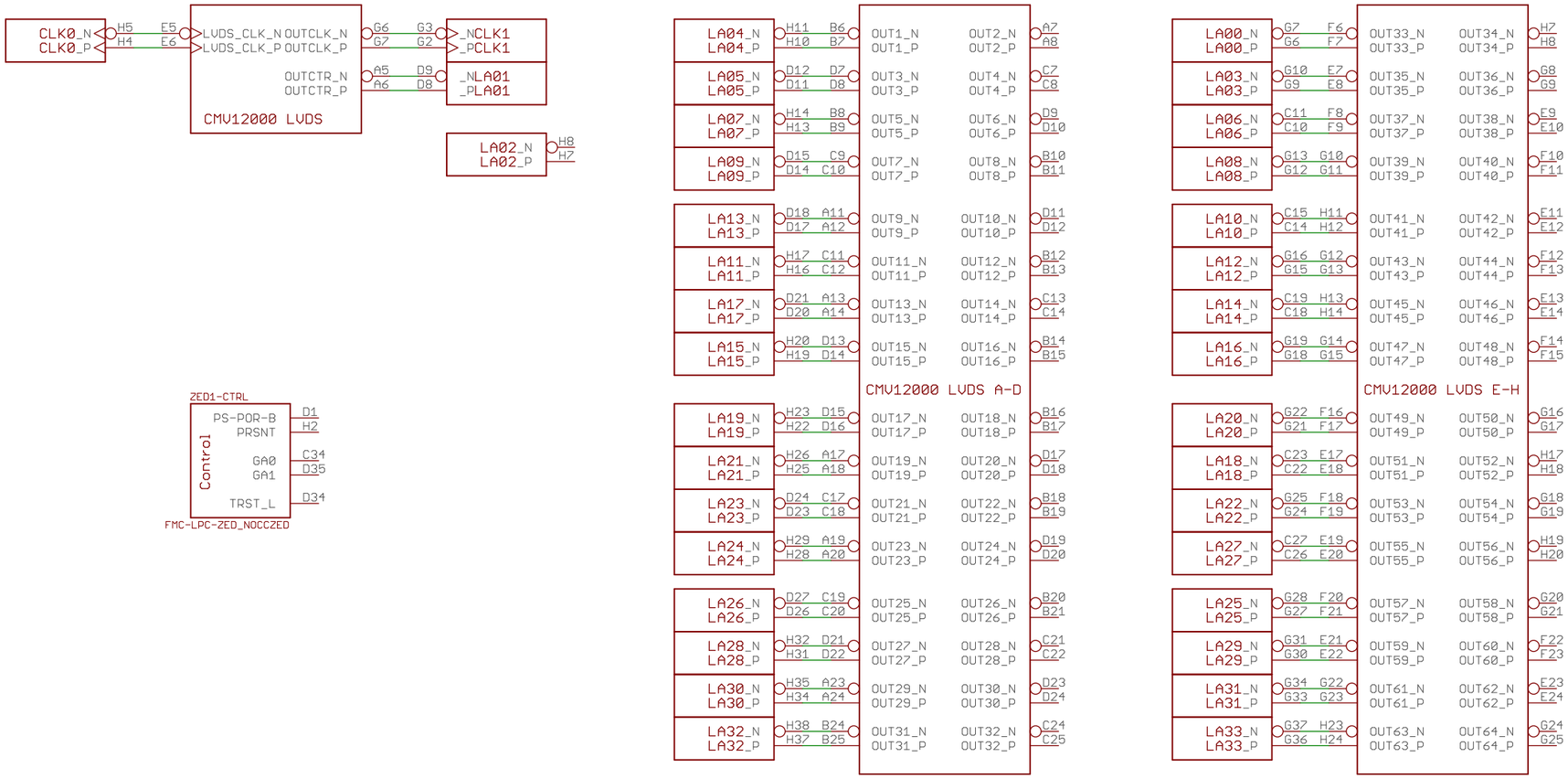

CMV12000 FMC ADAPTER — V0.8

LVDS and Control Interface — quad-center-v0.8.1

Max. 32 Channels, Two sided read-out — 12/14/21 7:52 PM

Copyright (C) 2013 H.Poetzl
Licensed under CERN OHL v.1.1

Sheet: 1/3

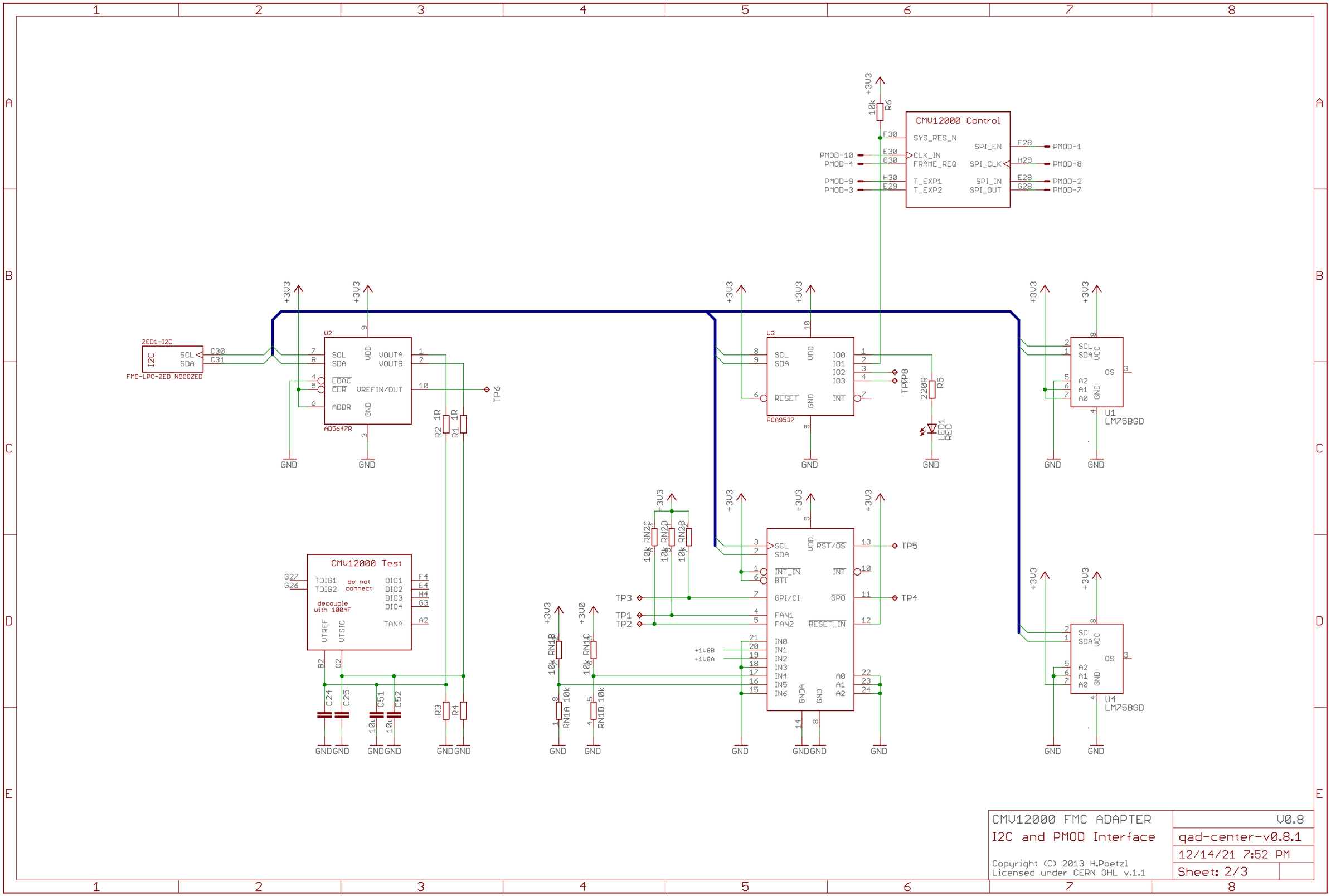

CMV12000 FMC ADAPTER
I2C and PMOD Interface

Copyright (C) 2013 H.Poetzl
Licensed under CERN OHL v.1.1

V0.8
qad-center-v0.8.1
12/14/21 7:52 PM
Sheet: 2/3

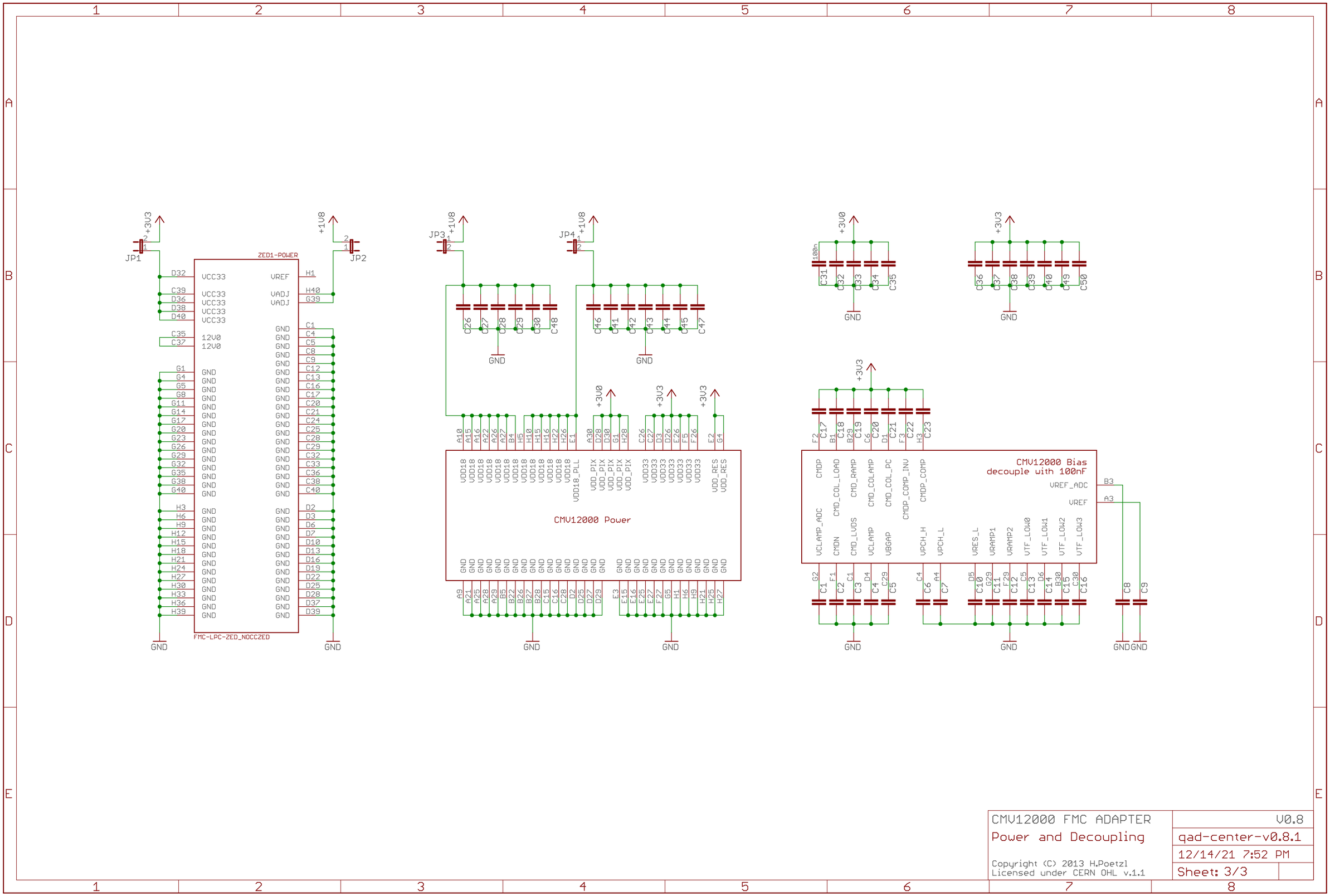

CMV12000 FMC ADAPTER	V0.8
Power and Decoupling	qad-center-v0.8.1
	12/14/21 7:52 PM
Copyright (C) 2013 H.Poetzl Licensed under CERN OHL v.1.1	Sheet: 3/3