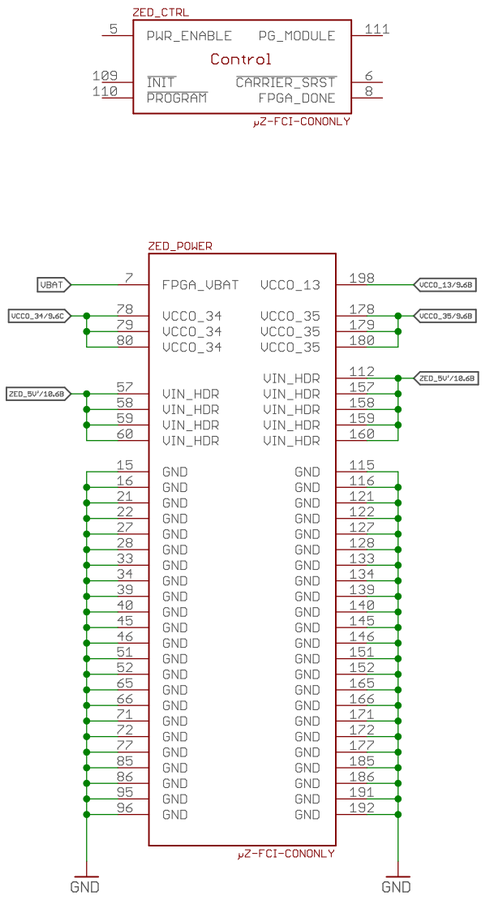


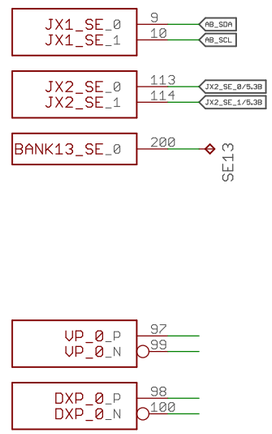


AXIOM Beta Test

MicroZed Power

Copyright (C) 2014 H.Poetzl
Licensed under CERN OHL v.1.2

axiom_beta_power_board_v0.9_test

17 Dec 2021 03:57:04

Sheet: 1/10

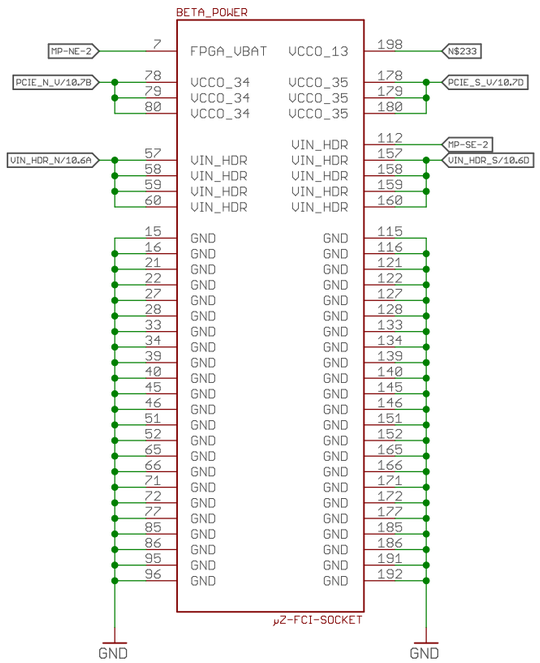


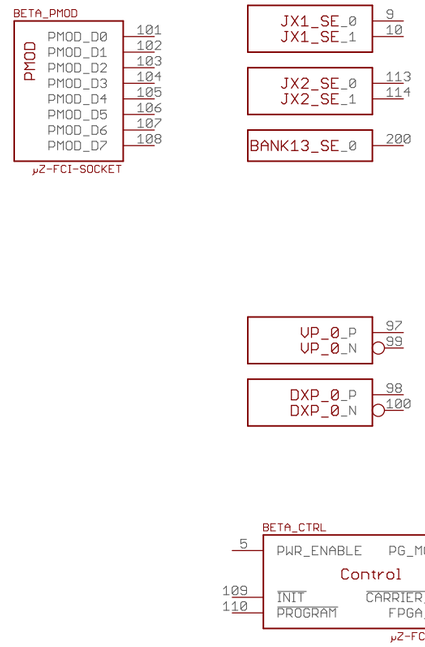


AXIOM Beta Test

Beta Power

Copyright (C) 2015 H.Poetzl
Licensed under CERN OHL v.1.2

axiom_beta_power_board_v0.9_test

17 Dec 2021 03:57:04

Sheet: 2/10

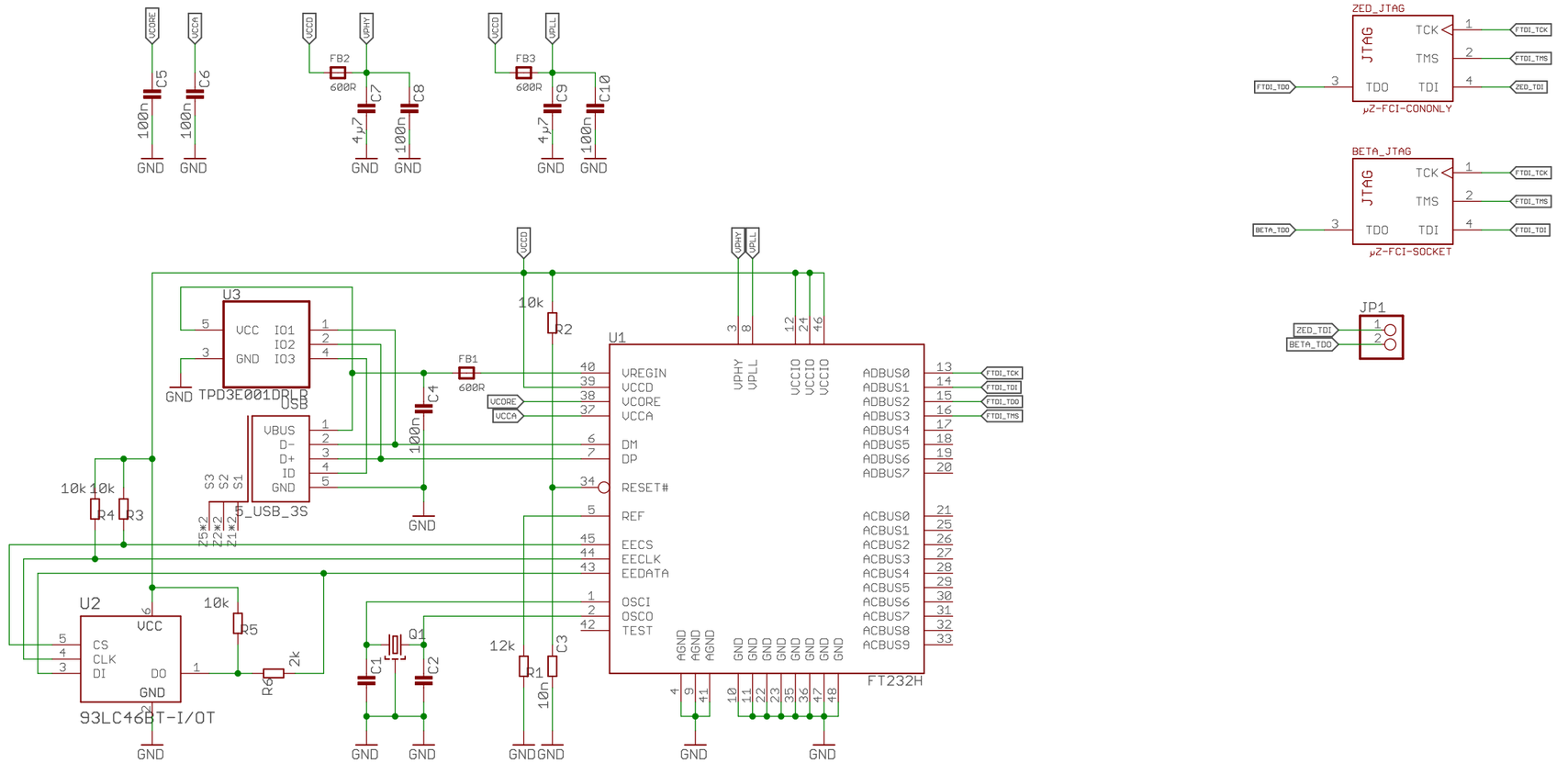


AXIOM Beta Test

FTDI Debug Interface

Copyright (C) 2014 H.Poetzl
Licensed under CERN OHL v.1.2

axiom_beta_power_board_v0.9_test

17 Dec 2021 03:57:04

Sheet: 3/10

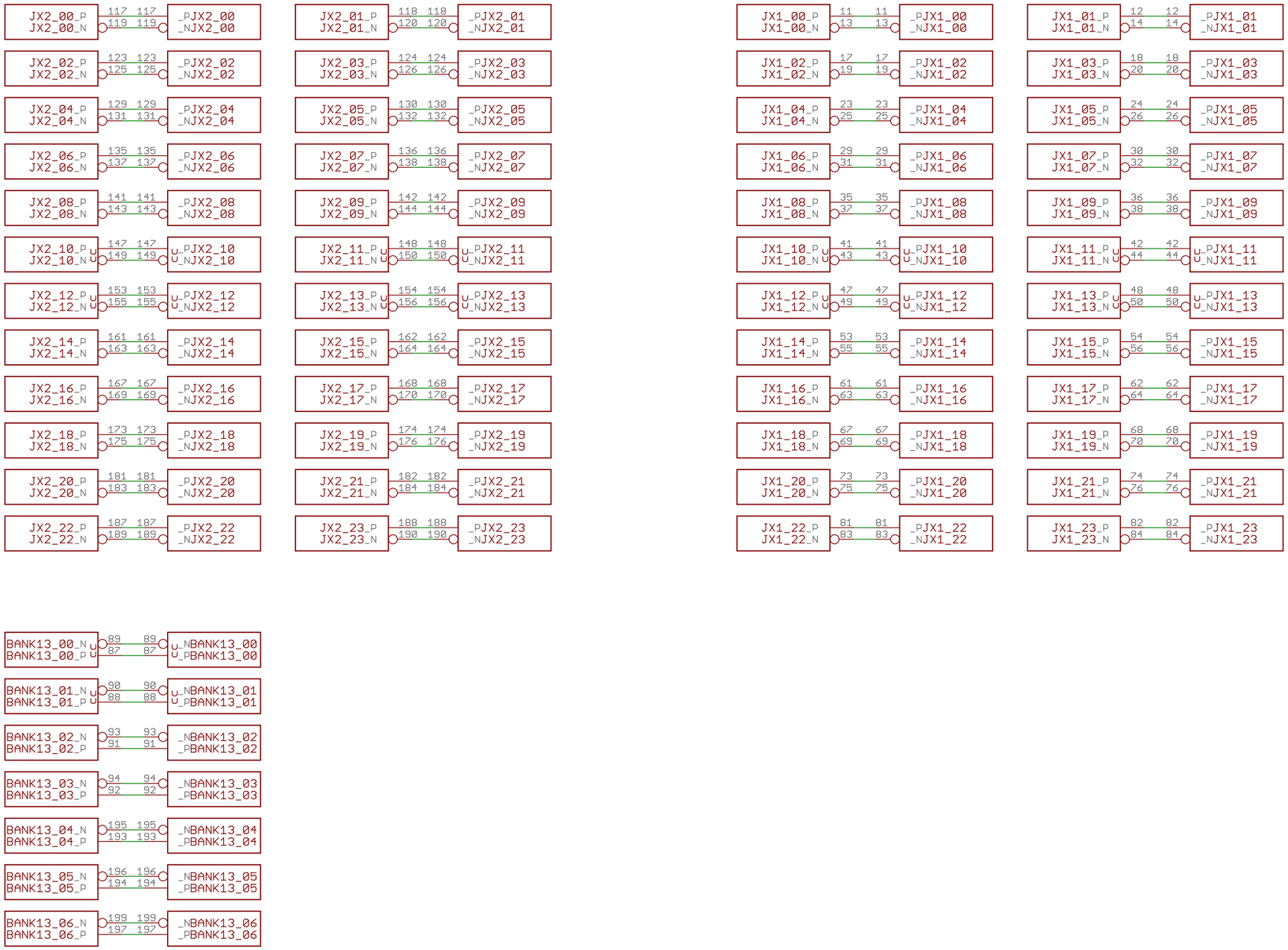


AXIOM Beta Test

LVDS Passthrough

Copyright (C) 2014 H.Poetzl
Licensed under CERN OHL v.1.2

axiom_beta_power_board_v0.9_test

17 Dec 2021 03:57:04

Sheet: 4/10

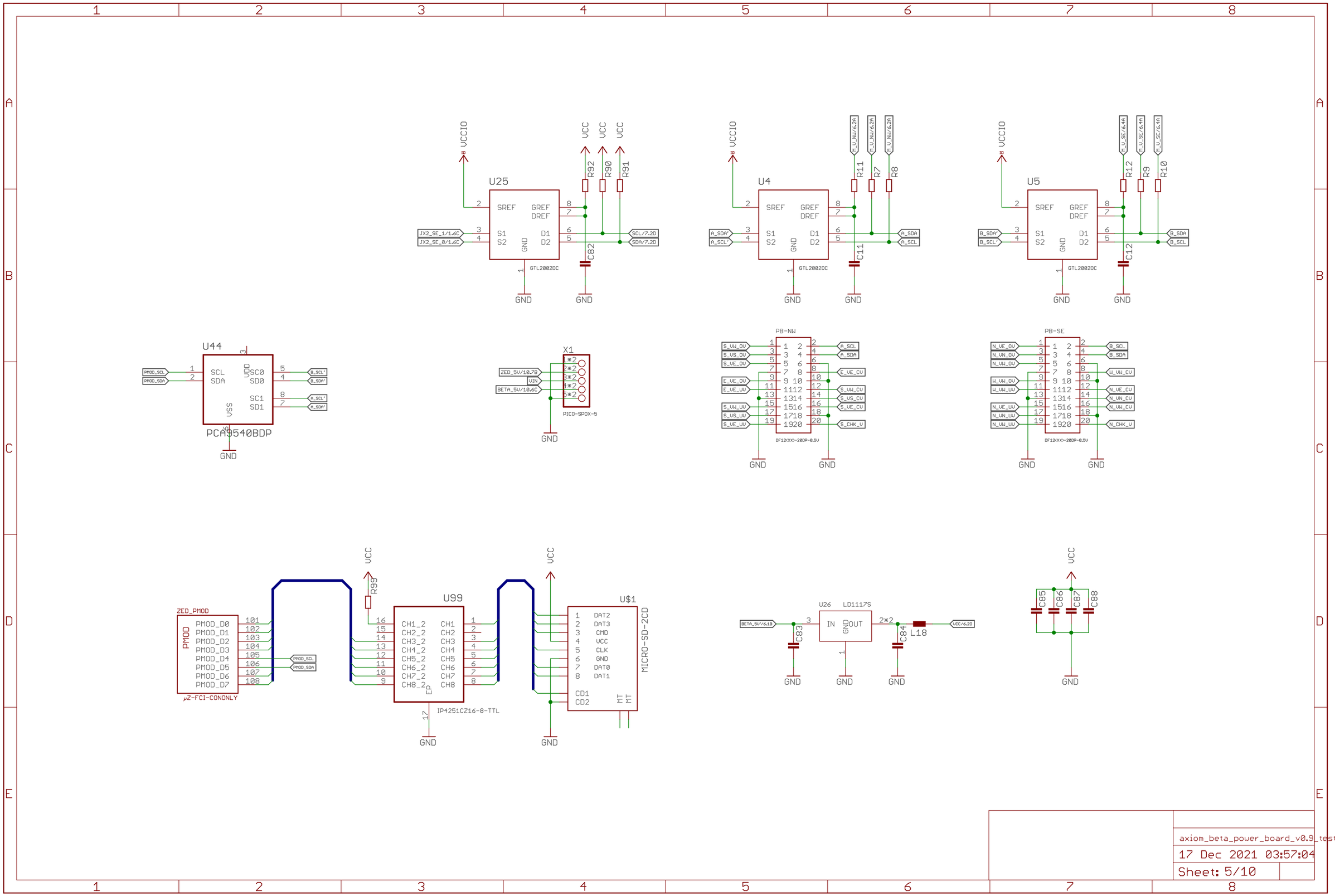


axiom_beta_power_board_v0.9_test

17 Dec 2021 03:57:04

Sheet: 5/10

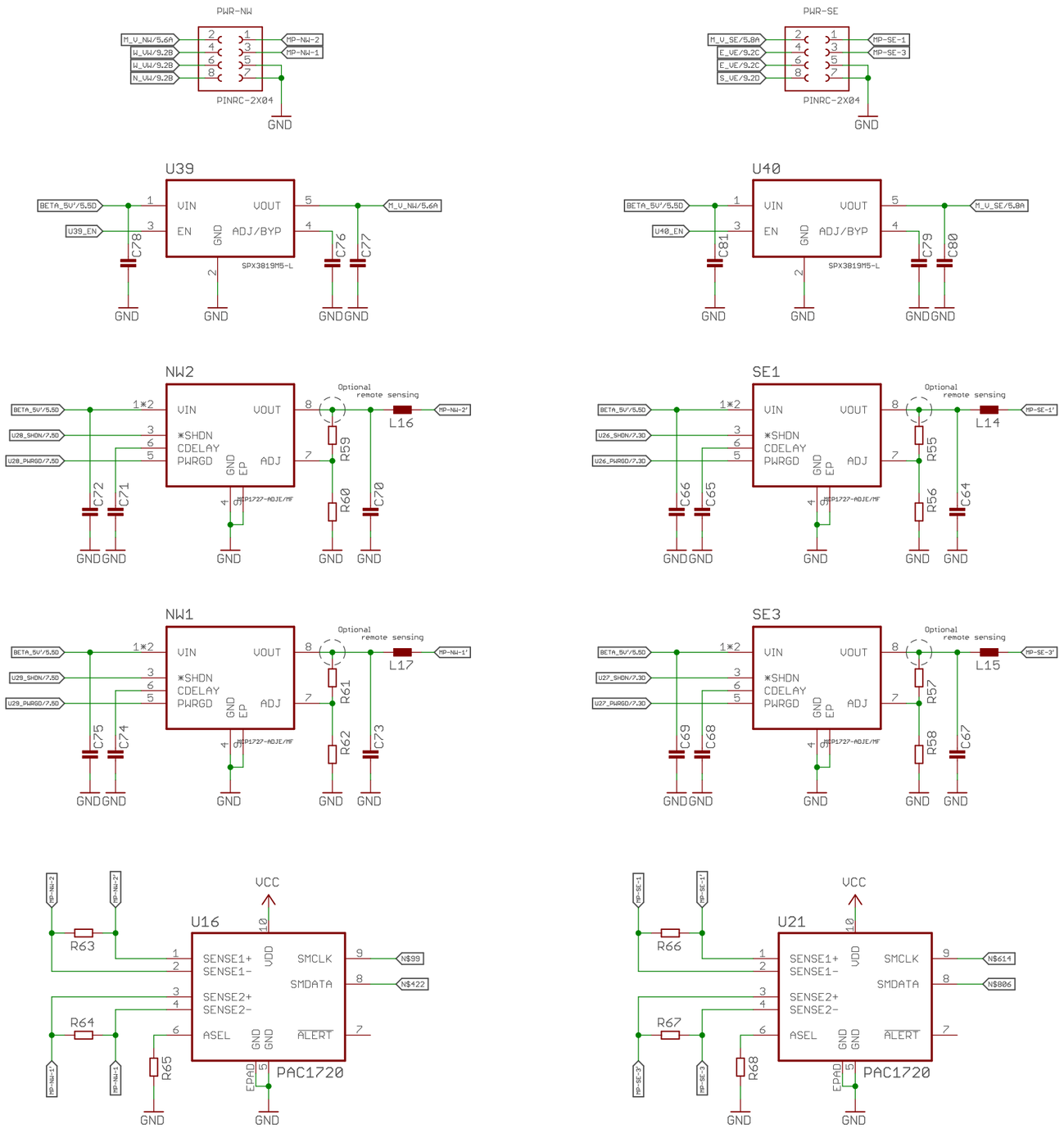


axiom_beta_power_board_v0.9_test

17 Dec 2021 03:57:04

Sheet: 6/10

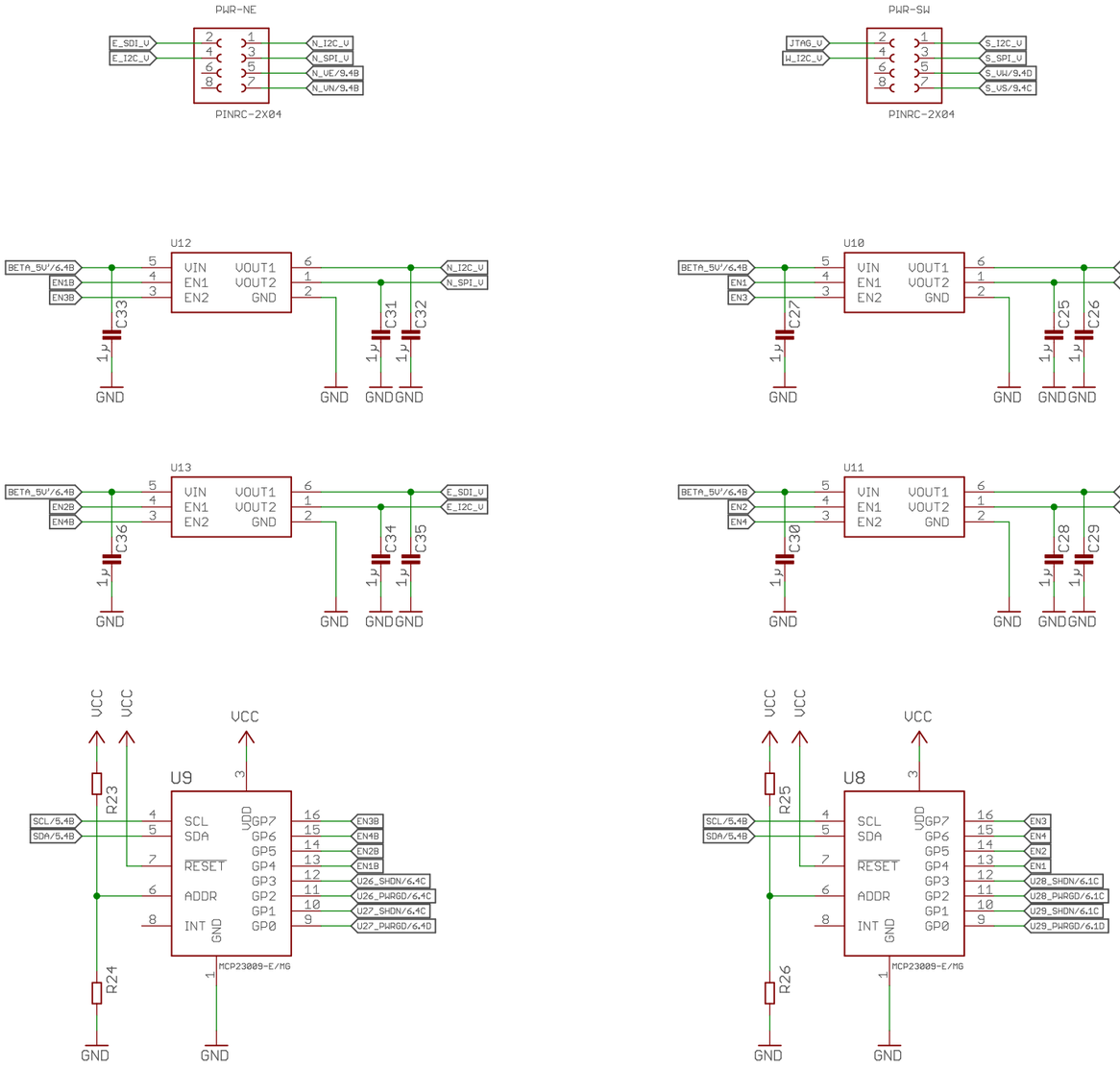


axiom_beta_power_board_v0.9_test

17 Dec 2021 03:57:04

Sheet: 7/10

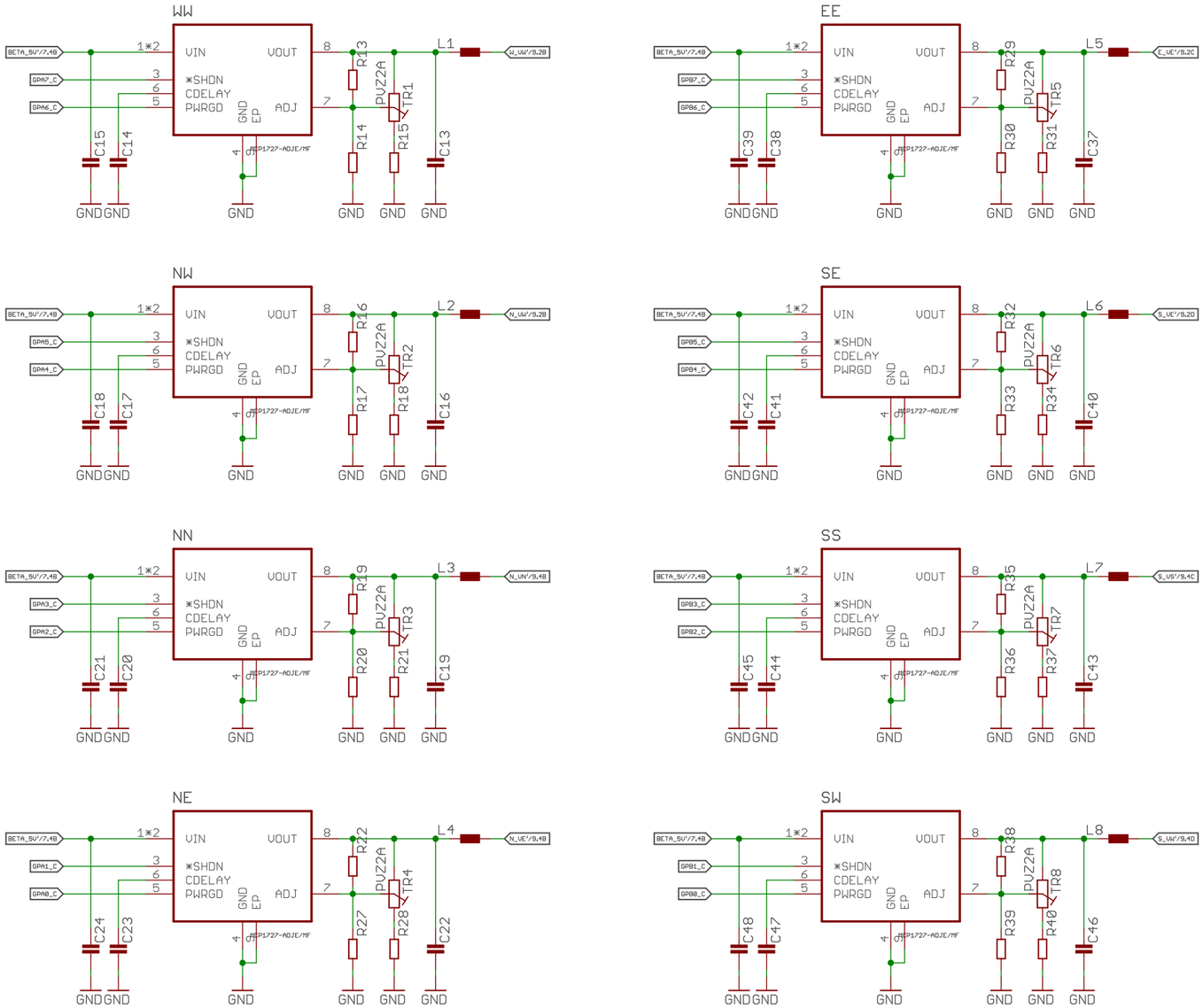


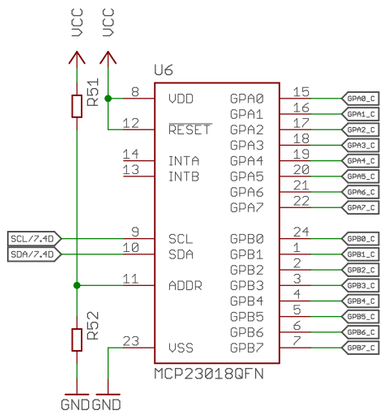


axiom_beta_power_board_v0.9_test

17 Dec 2021 03:57:04

Sheet: 8/10

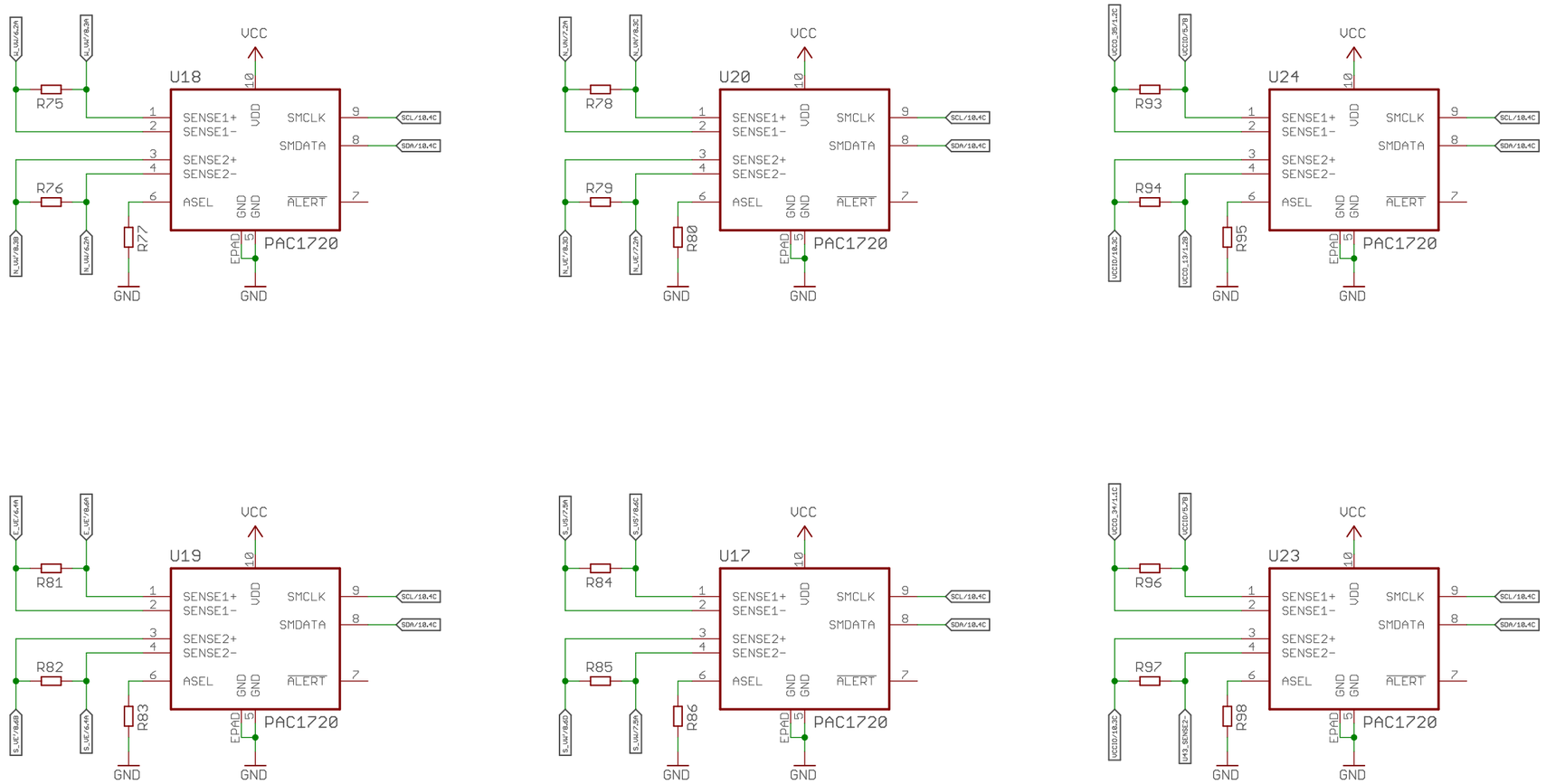


axiom_beta_power_board_v0.9_test

17 Dec 2021 03:57:04

Sheet: 9/10

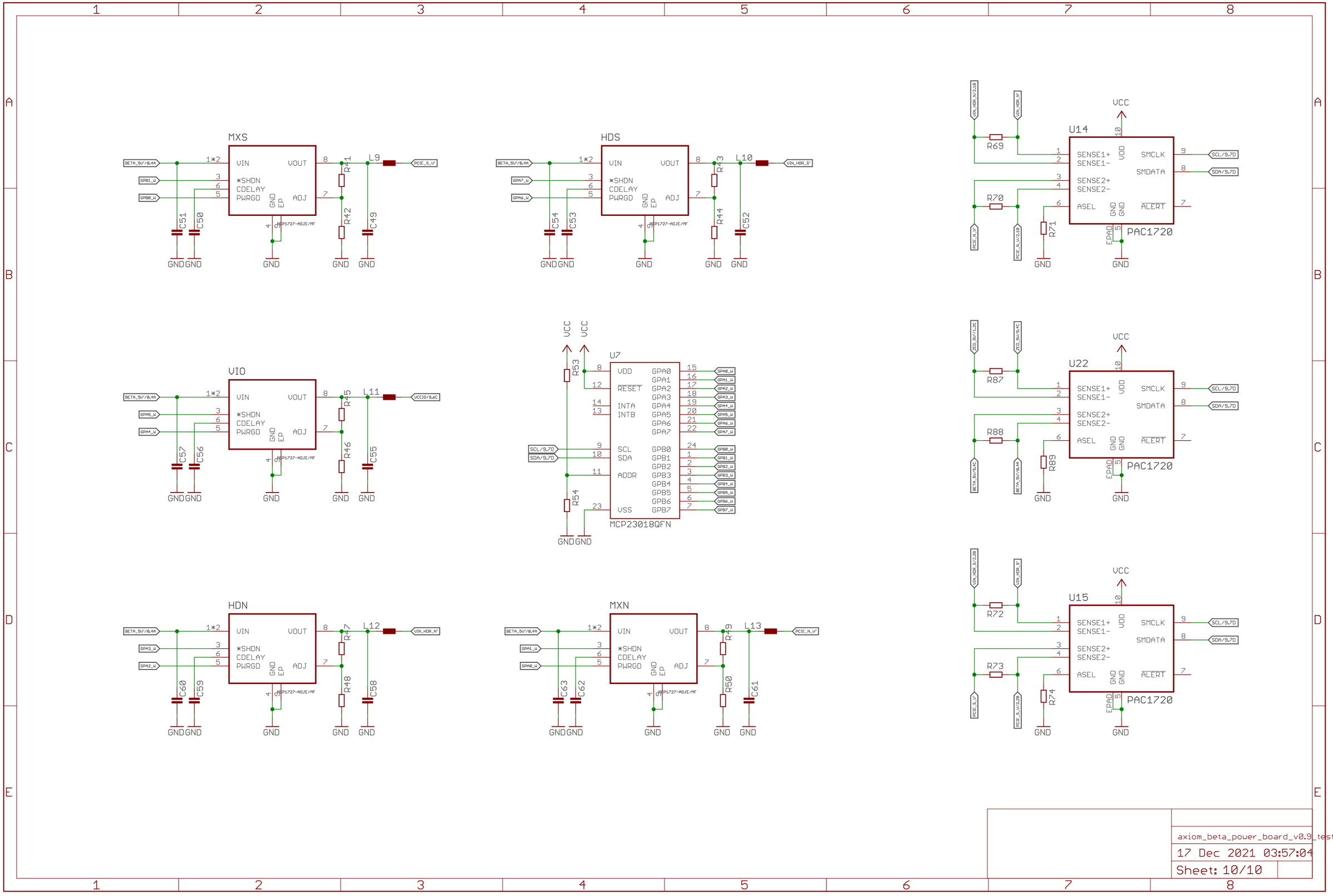
MXS
HDS
VIO
HDN
MXN
U7
MCP23018QFN
U14
U22
U15
PAC1720
VCC
axiom_beta_power_board_v0.9_test
17 Dec 2021 03:57:04
Sheet: 10/10