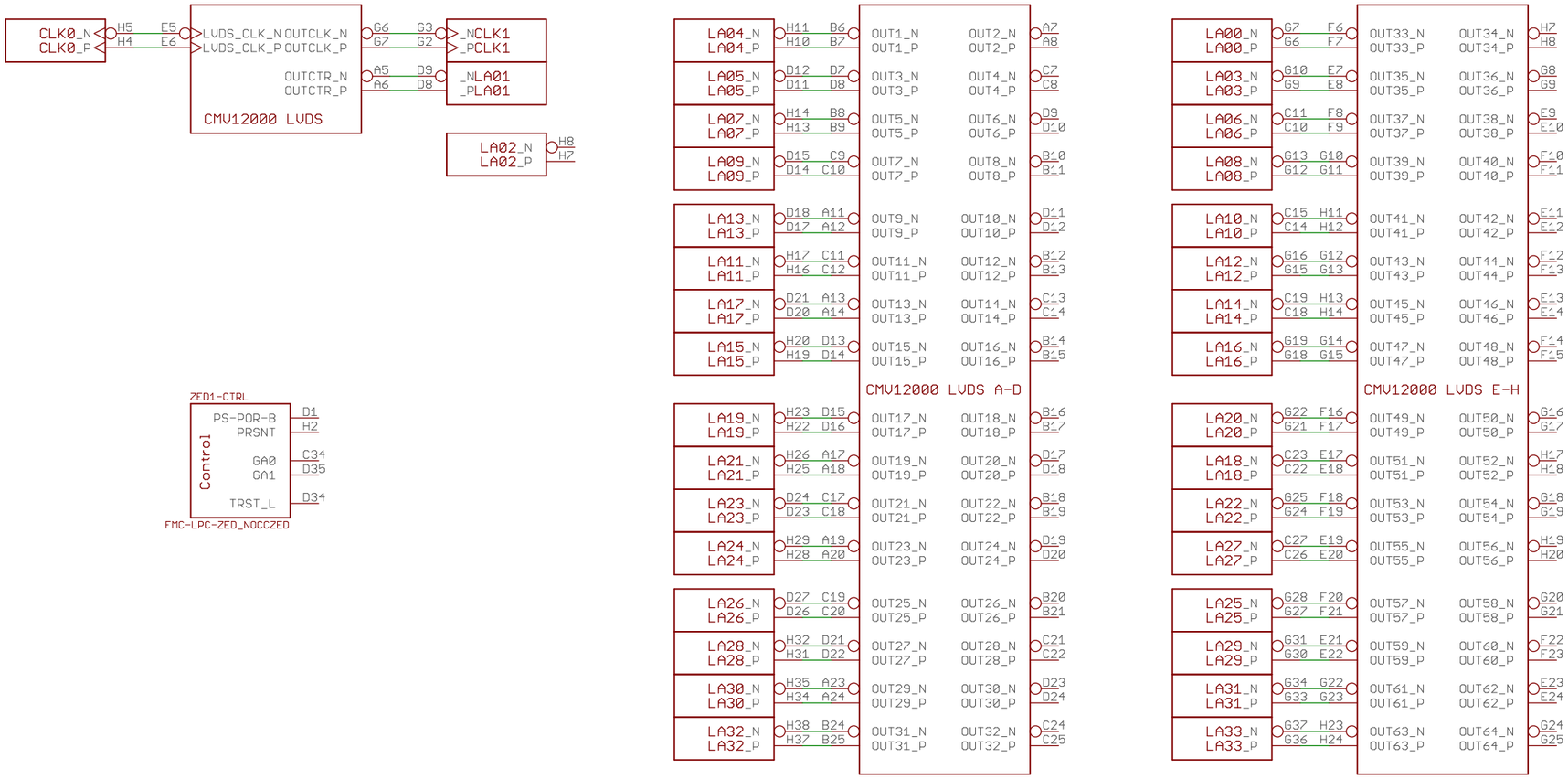

CMV12000 FMC ADAPTER — V0.8.9

LVDS and Control Interface — quad-center-v0.8.9

Max. 32 Channels, Two sided read-out

Copyright (C) 2013 H.Poetzl
Licensed under CERN OHL v.1.1

12/14/21 7:59 PM

Sheet: 1/3

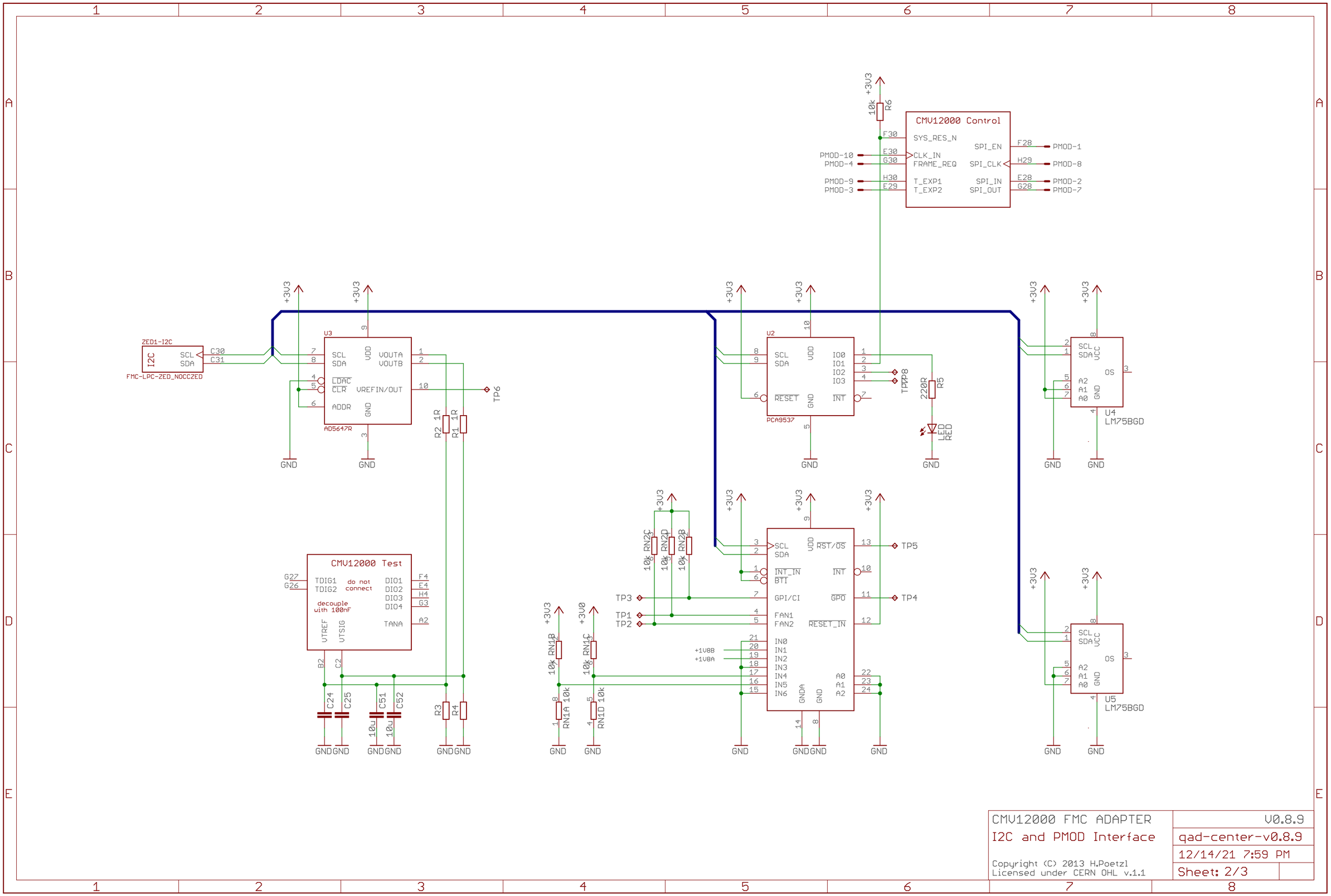
CMV12000 Control
SYS_RES_N
CLK_IN
FRAME_REQ
T_EXP1
T_EXP2
SPI_EN
SPI_CLK
SPI_IN
SPI_OUT
PMOD-10
PMOD-4
PMOD-9
PMOD-3
PMOD-1
PMOD-8
PMOD-2
PMOD-7
10k R6
+3V3
ZED1-I2C
FMC-LPC-ZED_NOCCZED
SCL
SDA
C30
C31
U3
AD5647R
VDD
VOUTA
VOUTB
LDAC
CLR
VREFIN/OUT
ADDR
GND
TP6
R2 1R
R1 1R
U2
PCA9537
IO0
IO1
IO2
IO3
RESET
INT
TP7
TP8
220R R5
LED RED
U4
LM75BGD
OS
A2
A1
A0
VCC
CMV12000 Test
G27
G26
TDIG1
TDIG2
do not connect
DIO1
DIO2
DIO3
DIO4
TANA
decouple with 100nF
VTREF
VTSIG
F4
E4
H4
G3
A2
B2
C2
C24
C25
C51
C52
10u
R3
R4
RN2C 10k
RN2D 10k
RN2B 10k
RN1B 10k
RN1C 10k
RN1A 10k
RN1D 10k
+3V0
TP3
TP1
TP2
TP5
TP4
RST/OS
INT_IN
BTI
GPI/CI
GPO
FAN1
FAN2
RESET_IN
IN0
IN1
IN2
IN3
IN4
IN5
IN6
GNDA
+1V8B
+1V8A
CMV12000 FMC ADAPTER
I2C and PMOD Interface
Copyright (C) 2013 H.Poetzl
Licensed under CERN OHL v.1.1
V0.8.9
qad-center-v0.8.9
12/14/21 7:59 PM
Sheet: 2/3

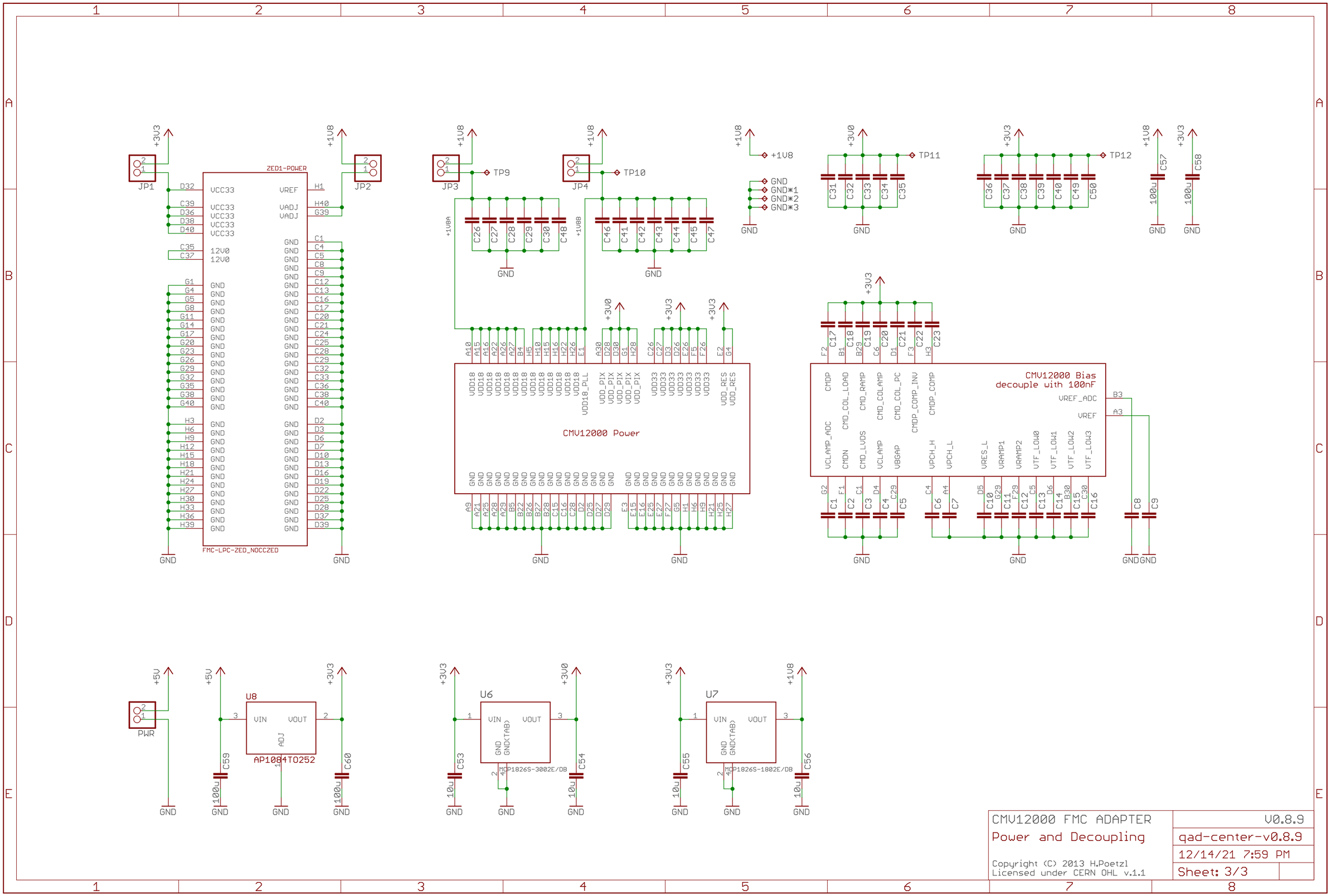
ZED1-POWER
FMC-LPC-ZED_NOCCZED
CMV12000 Power
CMV12000 Bias
decouple with 100nF
U8
AP1084TO252
U6
MCP1826S-3002E/DB
U7
MCP1826S-1802E/DB
CMV12000 FMC ADAPTER
Power and Decoupling
V0.8.9
qad-center-v0.8.9
12/14/21 7:59 PM
Sheet: 3/3
Copyright (C) 2013 H.Poetzl
Licensed under CERN OHL v.1.1