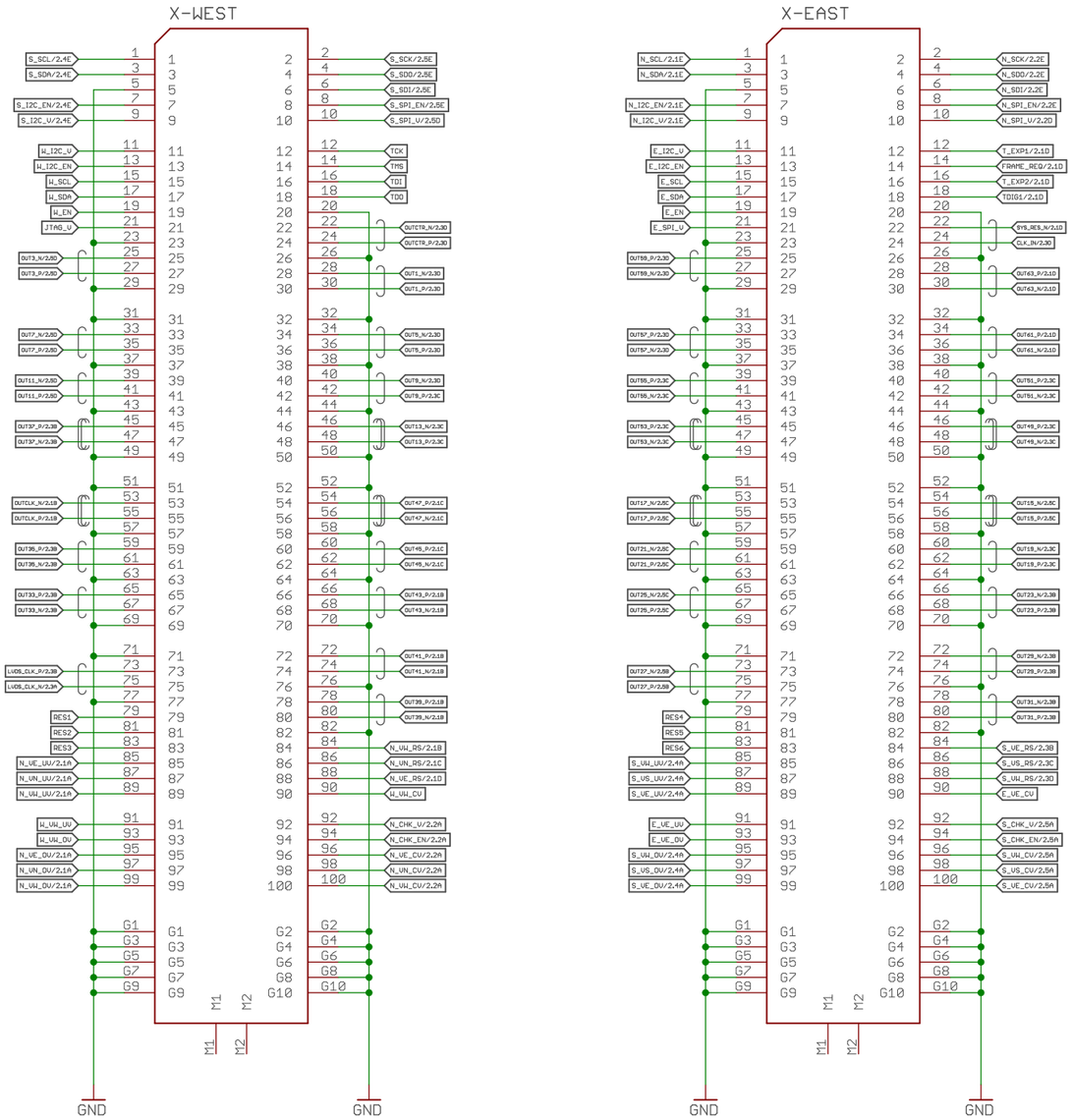

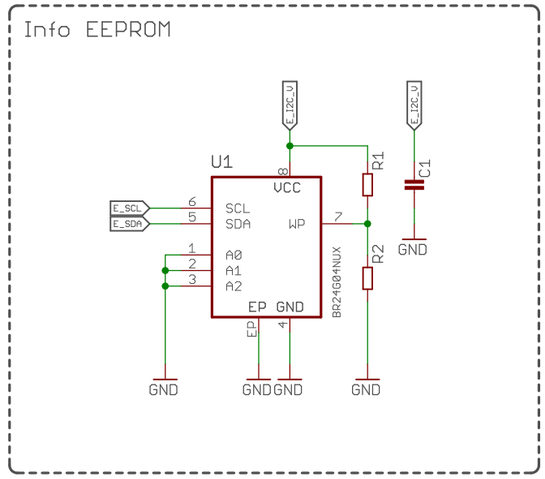

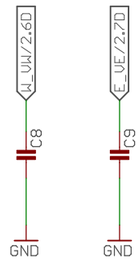

AXIOM Beta Dummy Interface

Beta Board Interface

E_SPI_U assumed equal to LVDS

Copyright (C) 2014-2015 Herbert Poetzl
Licensed under CERN OHL v.1.2

axiom_beta_interface_dummy_v0.12

17 Dec 2021 03:43:15

Sheet: 1/2

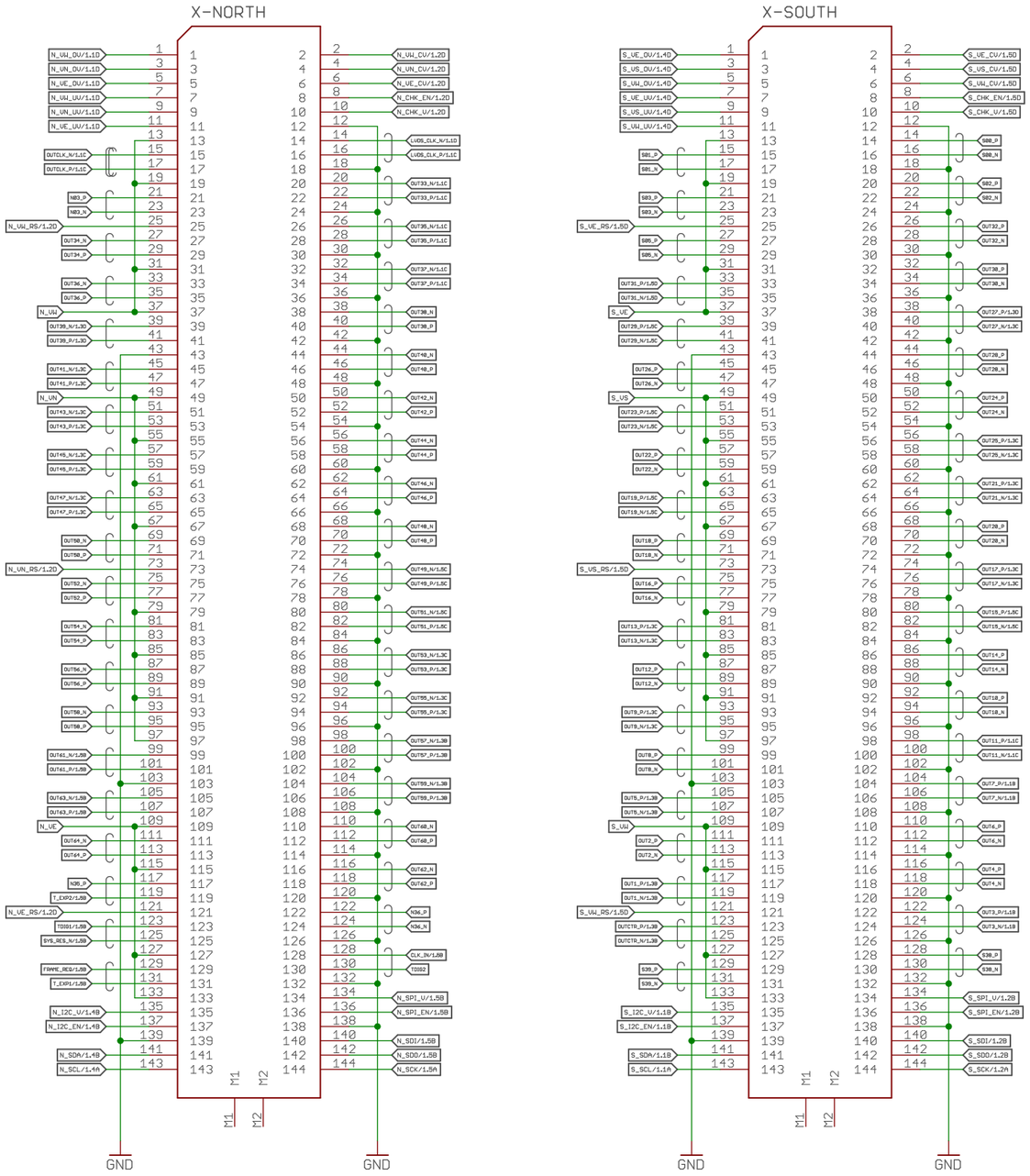

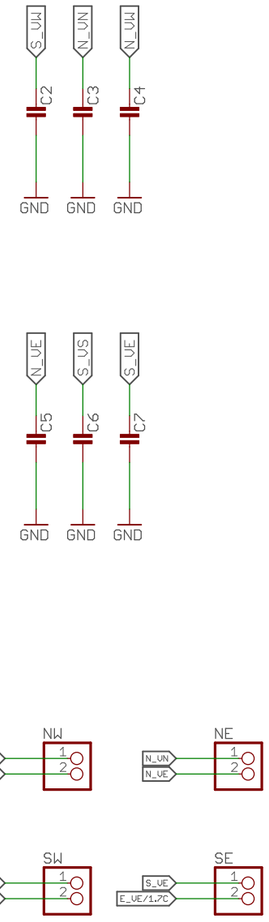

AXIOM Beta Dummy Interface

CMV12000 Interface

32 LVDS channels (16/16) connected

axiom_beta_interface_dummy_v0.12

17 Dec 2021 03:43:15

Sheet: 2/2

Copyright (C) 2014-2015 Herbert Poetzl
Licensed under CERN OHL v.1.2