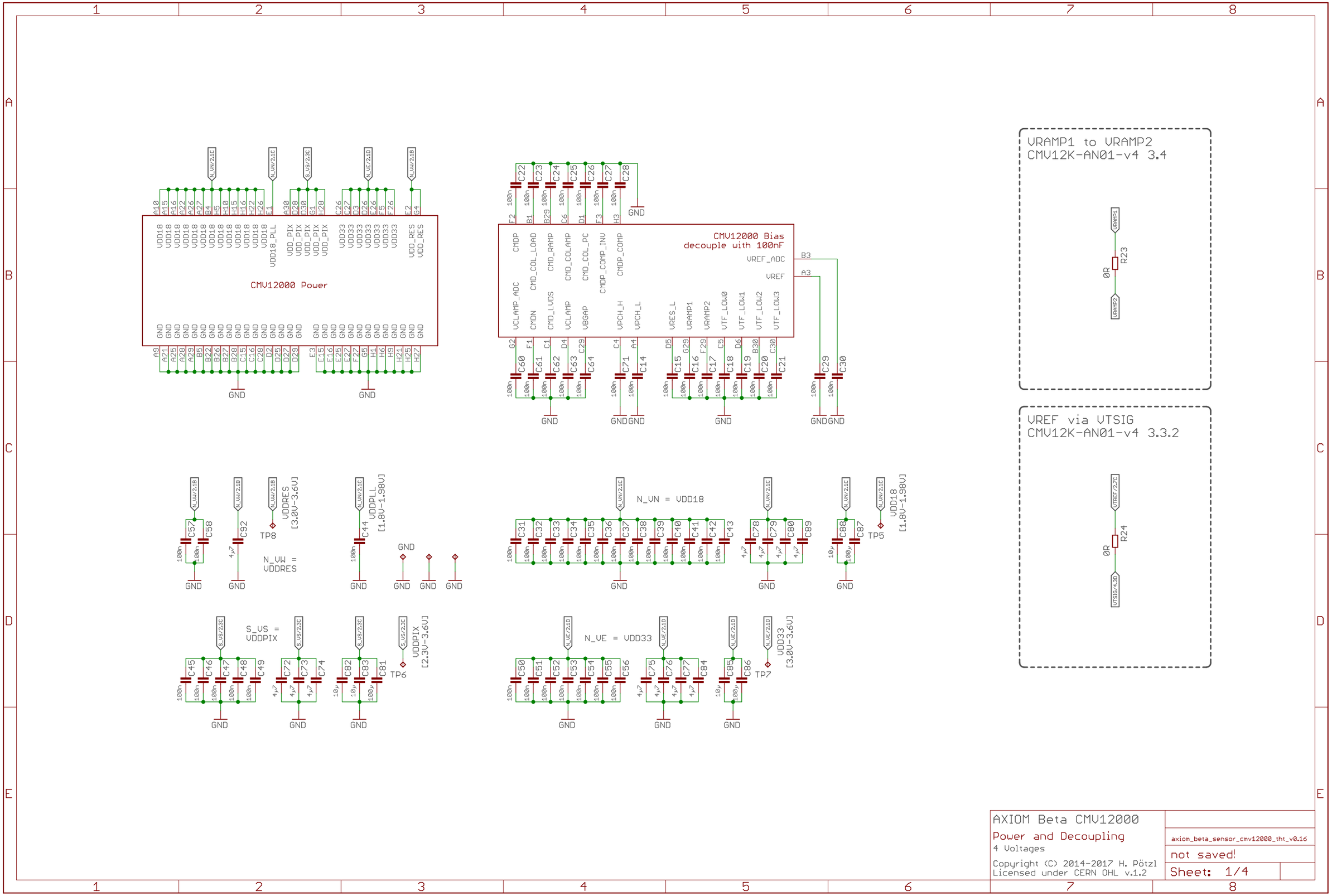

AXIOM Beta CMV12000

Power and Decoupling

4 Voltages

Copyright (C) 2014-2017 H. Pötzl
Licensed under CERN OHL v.1.2

axiom_beta_sensor_cmv12000_tht_v0.16

not saved!

Sheet: 1/4

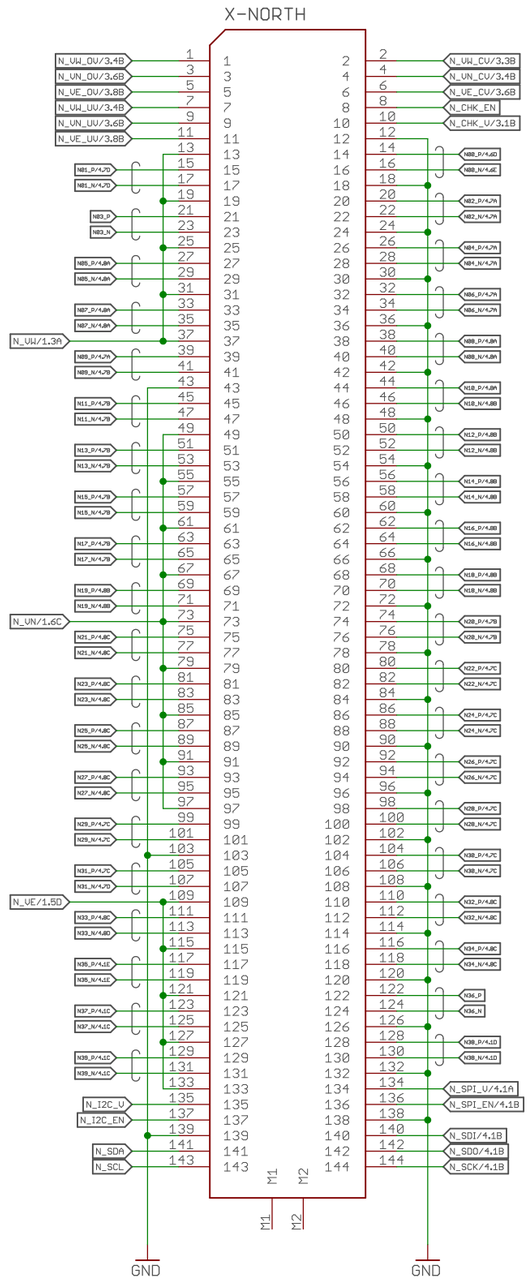

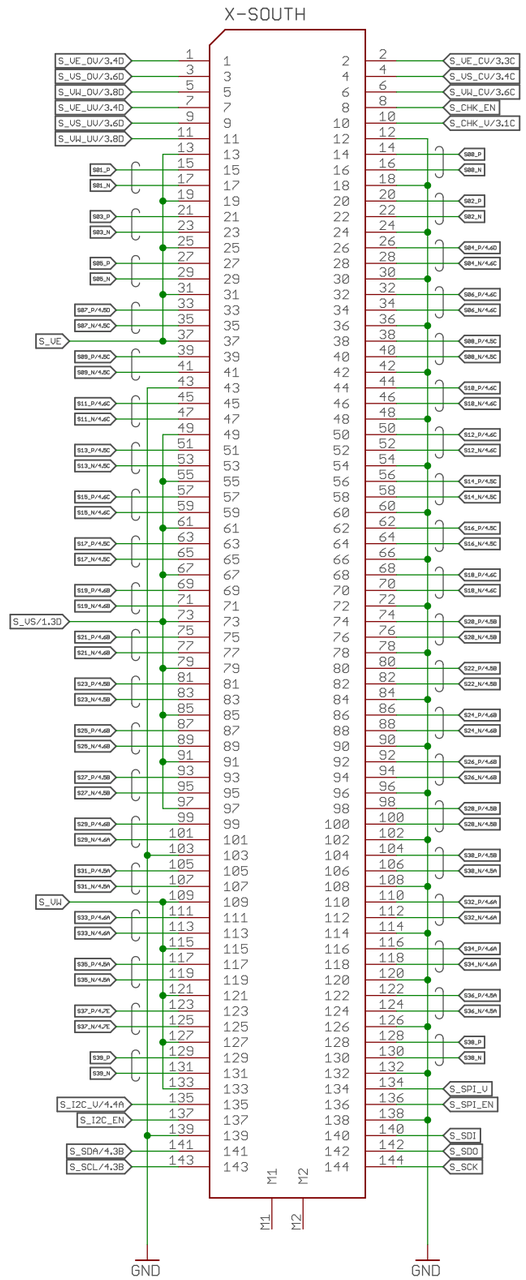

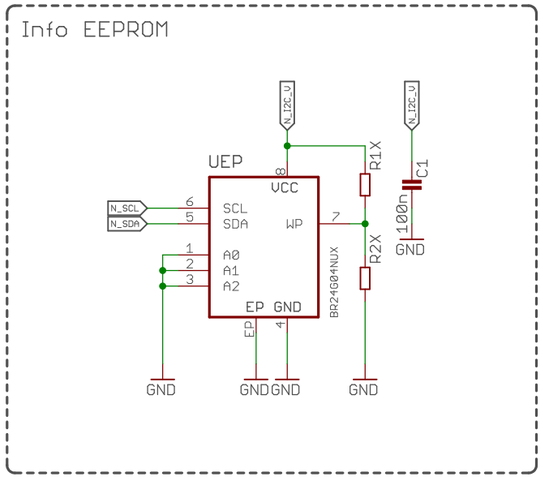

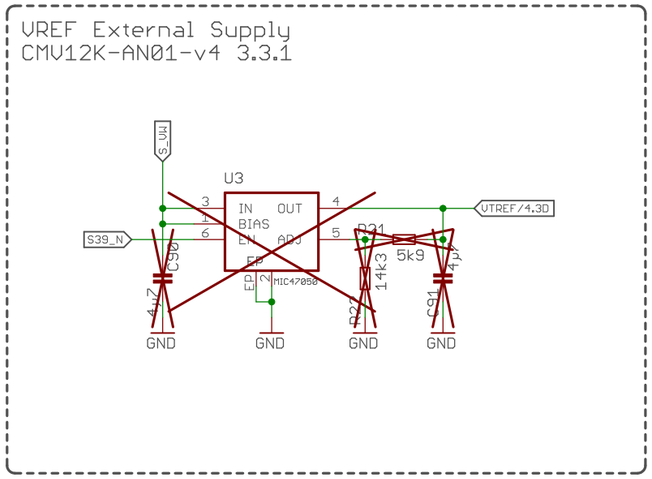

AXIOM Beta CMV12000

Interface, Info and VREF

Optional VREF Supply

Copyright (C) 2014-2017 H. Pötzl
Licensed under CERN OHL v.1.2

axiom_beta_sensor_cmv12000_tht_v0.16

not saved!

Sheet: 2/4

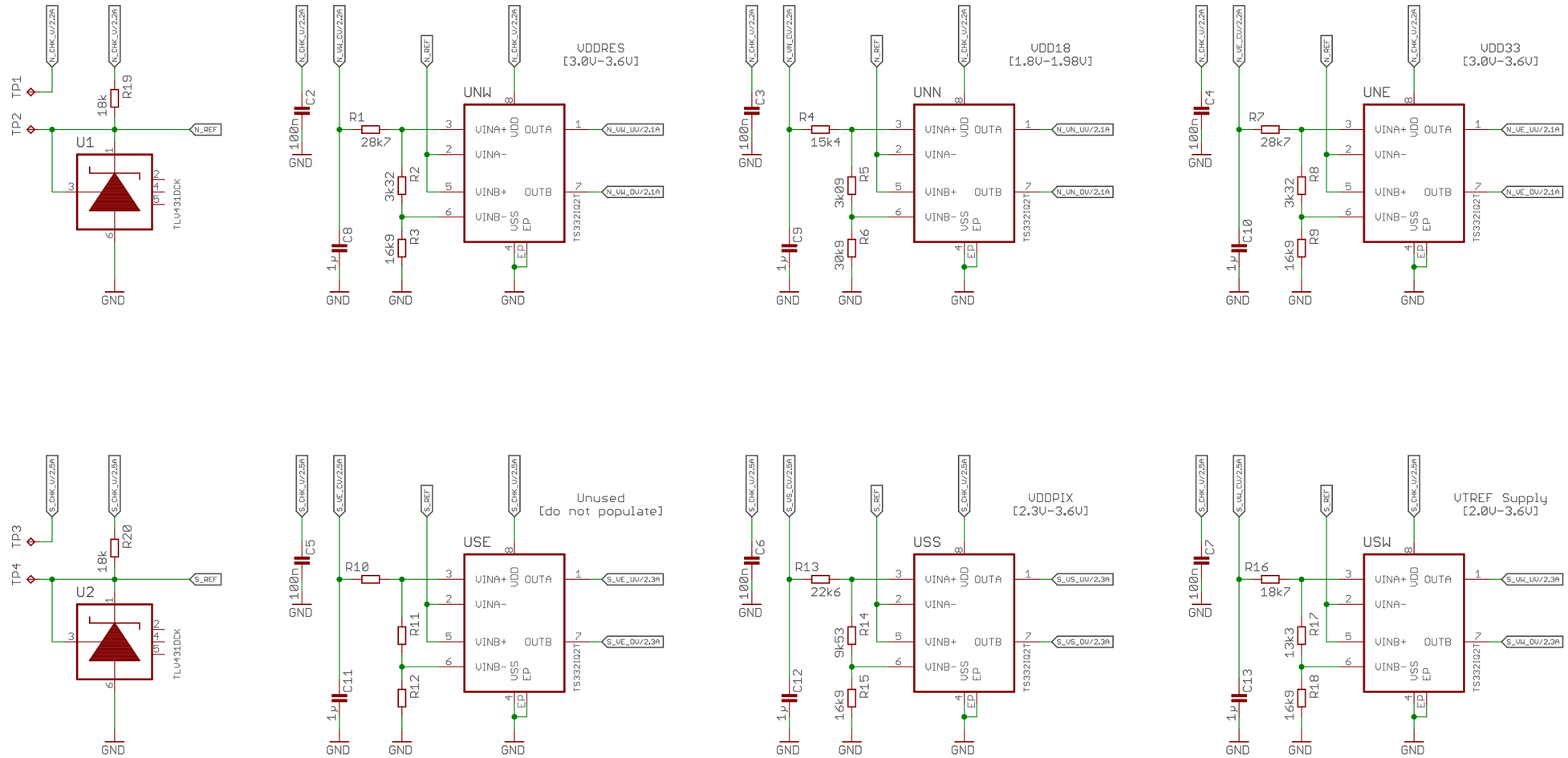

AXIOM Beta CMV12000

Over/Under Voltage Check

4/5 Voltages

Copyright (C) 2014-2017 H. Pötzl
Licensed under CERN OHL v.1.2

axiom_beta_sensor_cmv12000_tht_v0.16

not saved!

Sheet: 3/4

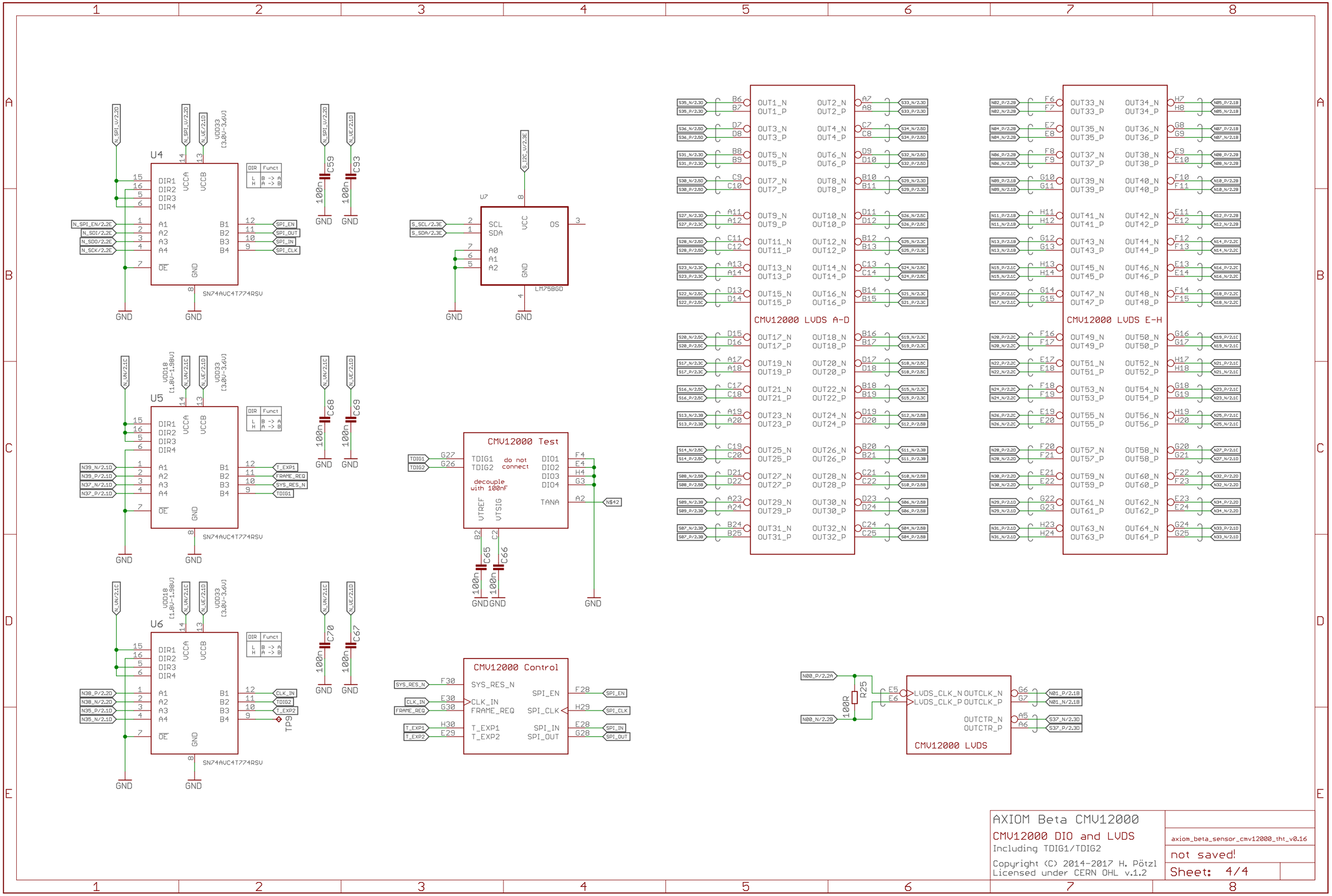
U4
SN74AVC4T774RSV
U5
SN74AVC4T774RSV
U6
SN74AVC4T774RSV
U7
LM75BGD
CMV12000 Test
CMV12000 Control
CMV12000 LVDS A-D
CMV12000 LVDS E-H
CMV12000 LVDS
AXIOM Beta CMV12000
CMV12000 DIO and LVDS
Including TDIG1/TDIG2
Copyright (C) 2014-2017 H. Pötzl
Licensed under CERN OHL v.1.2
axiom_beta_sensor_cmv12000_tht_v0.16
not saved!
Sheet: 4/4