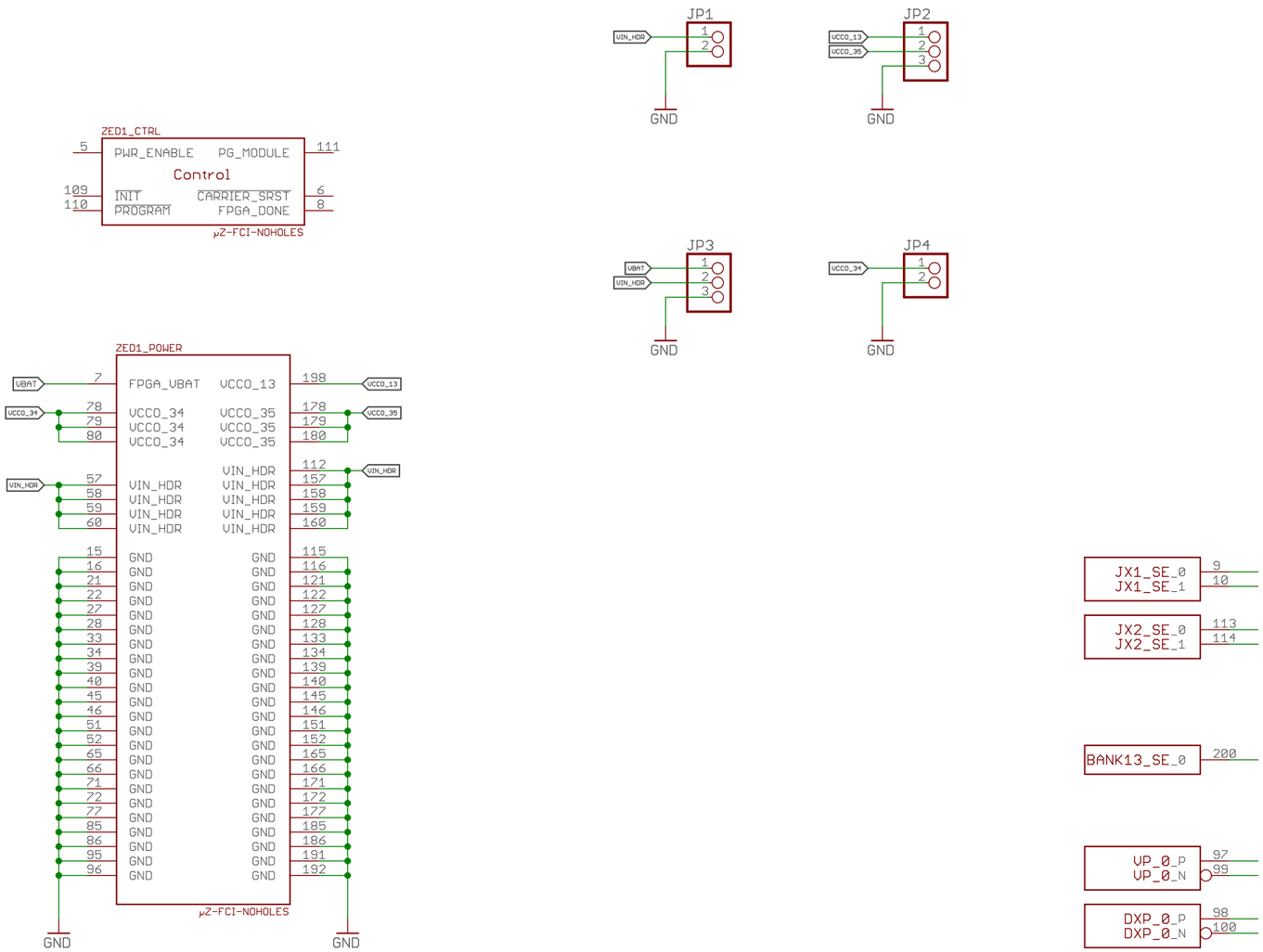

FMC I/O CARRIER

FTDI Debug Interface

Copyright (C) 2014 H.Poetzl
Licensed under CERN OHL v.1.2

axiom_beta_board_100_v0.7_test

12/14/21 6:56 PM

Sheet: 1/5

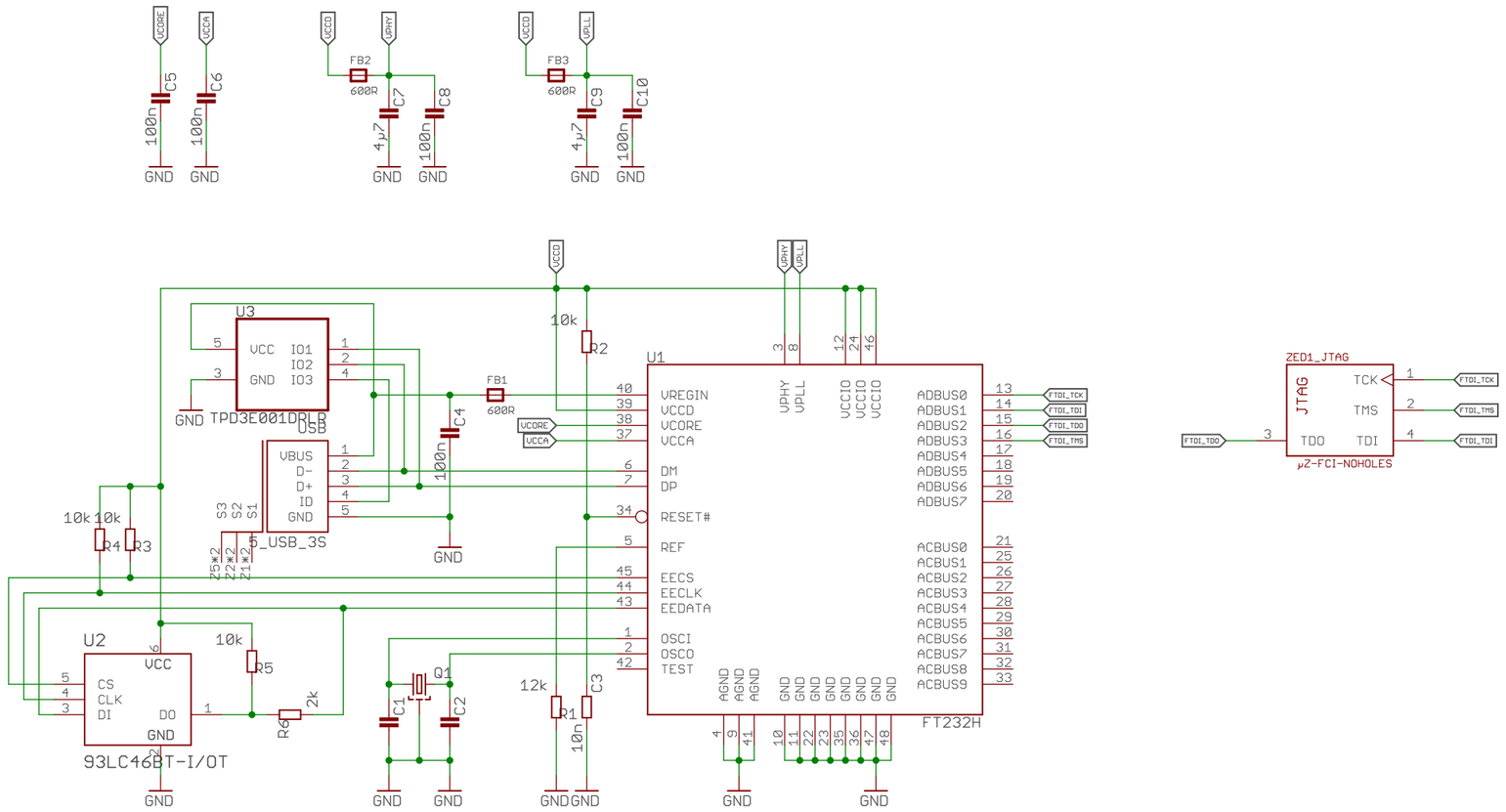

FMC I/O CARRIER

FTDI Debug Interface

axiom_beta_board_100_v0.7_test

12/14/21 6:56 PM

Sheet: 2/5

Copyright (C) 2014 H.Poetzl
Licensed under CERN OHL v.1.2

FMC I/O CARRIER

ZYNQ I/O Shield

axiom_beta_board_100_v0.7_test

12/14/21 6:56 PM

Sheet: 3/5

Copyright (C) 2014 H.Poetzl
Licensed under CERN OHL v.1.2

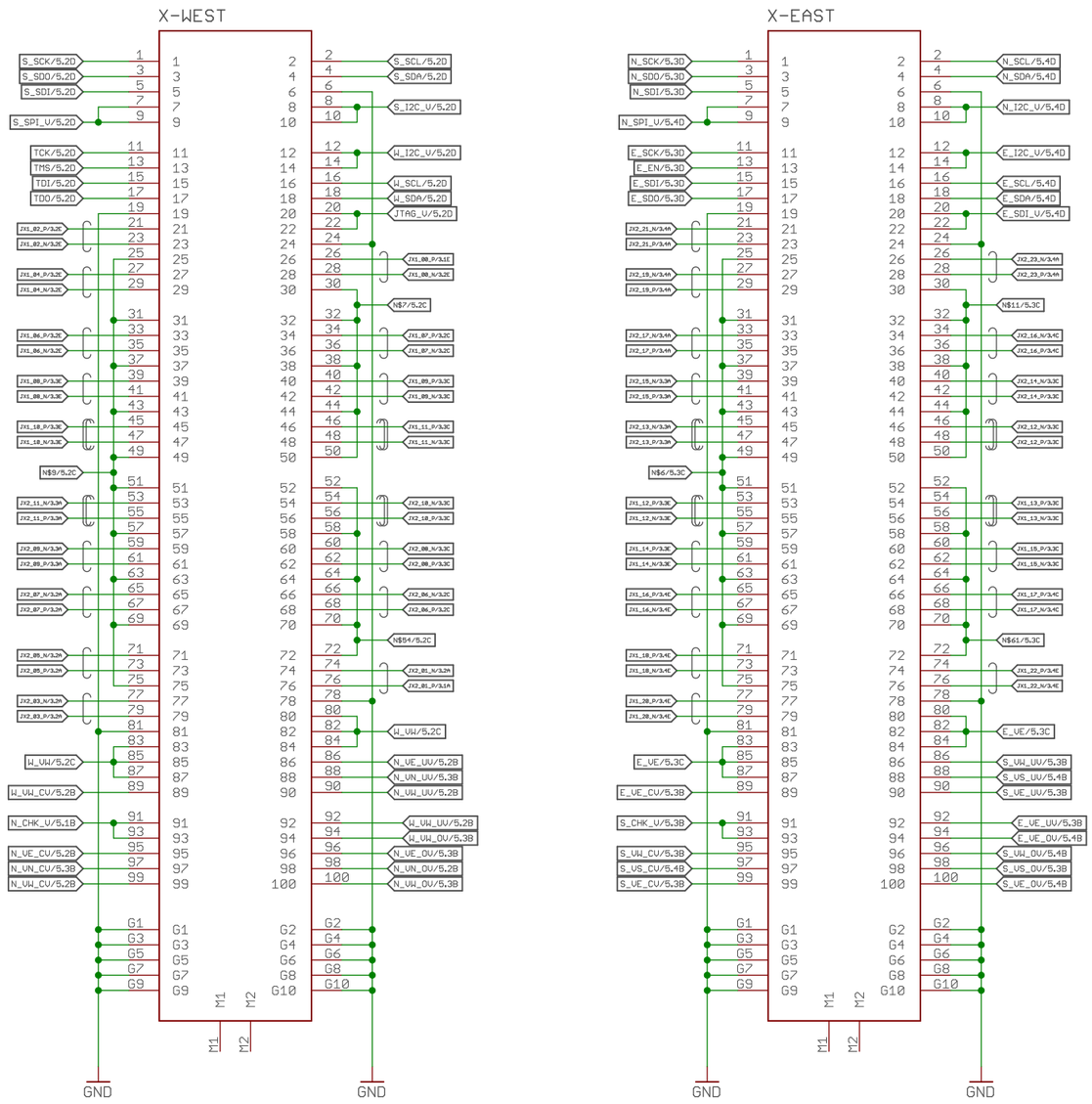

axiom_beta_board_100_v0.7_test

12/14/21 6:56 PM

Sheet: 4/5

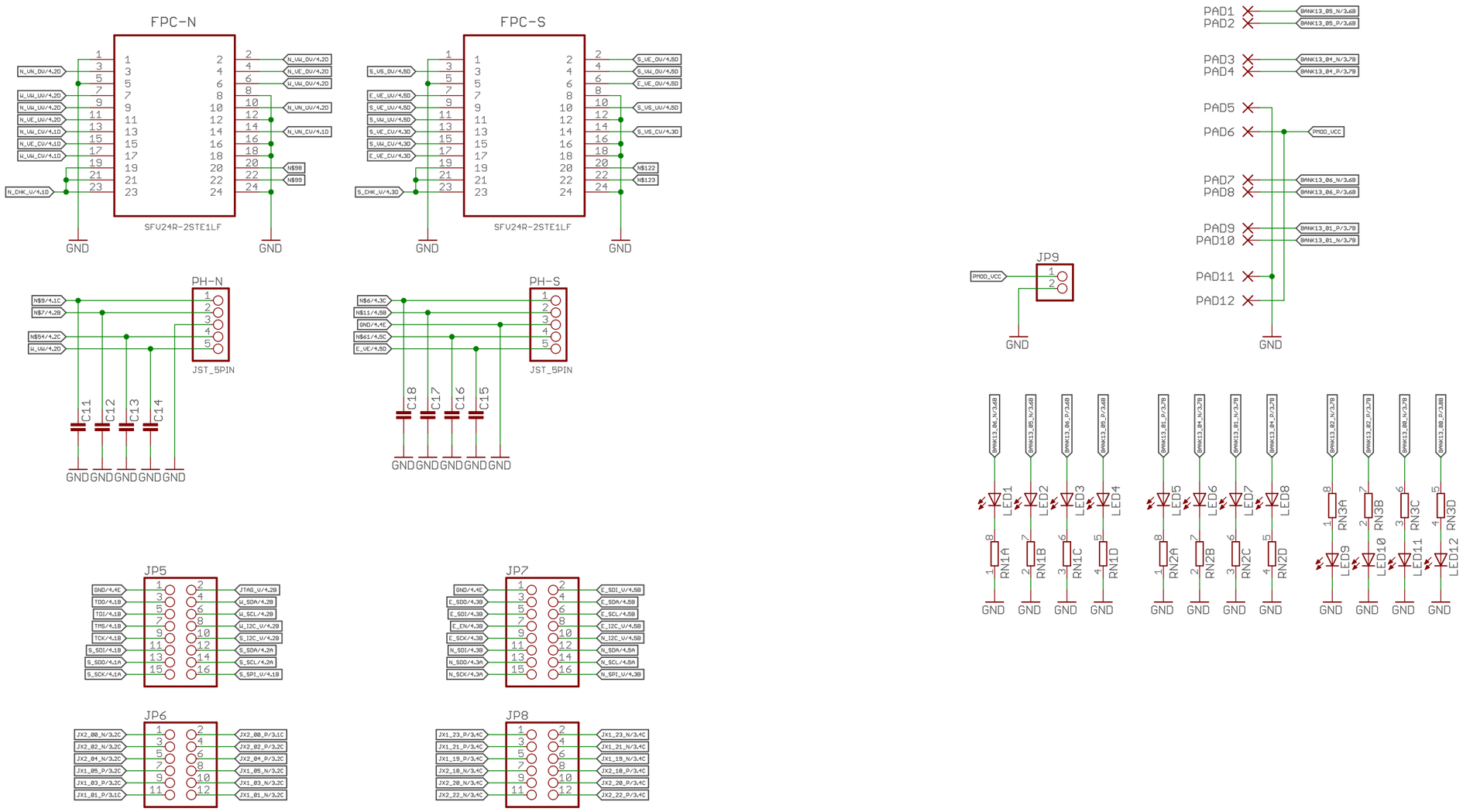

axiom_beta_board_100_v0.7_test

12/14/21 6:56 PM

Sheet: 5/5