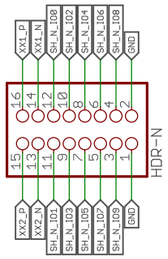

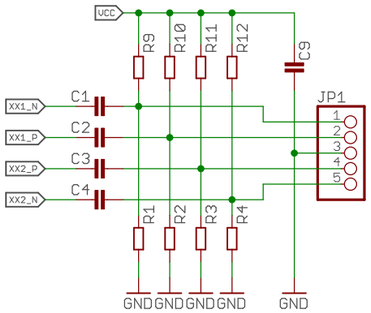

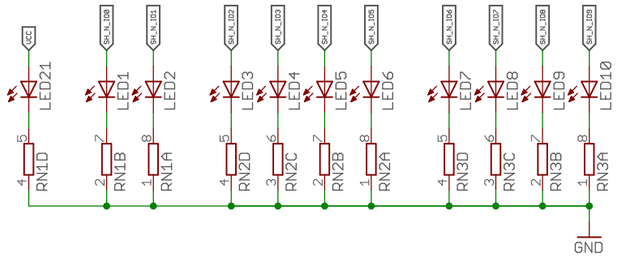

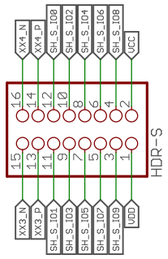

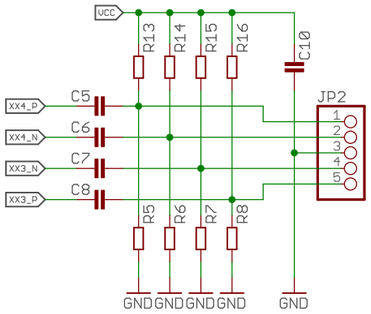

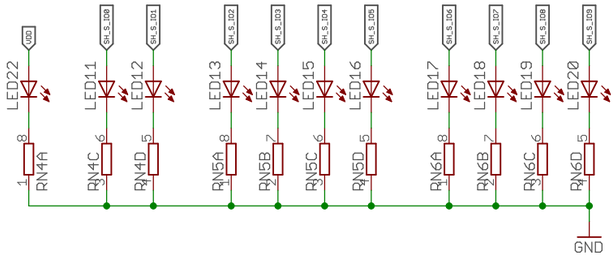

AXIOM Beta Shield

Debug Shield

axiom_beta_shield_debug_v0.2

Copyright (C) 2015-2017 H.Pötzl
Licensed under CERN OHL v.1.2

not saved!

Sheet: 1/1