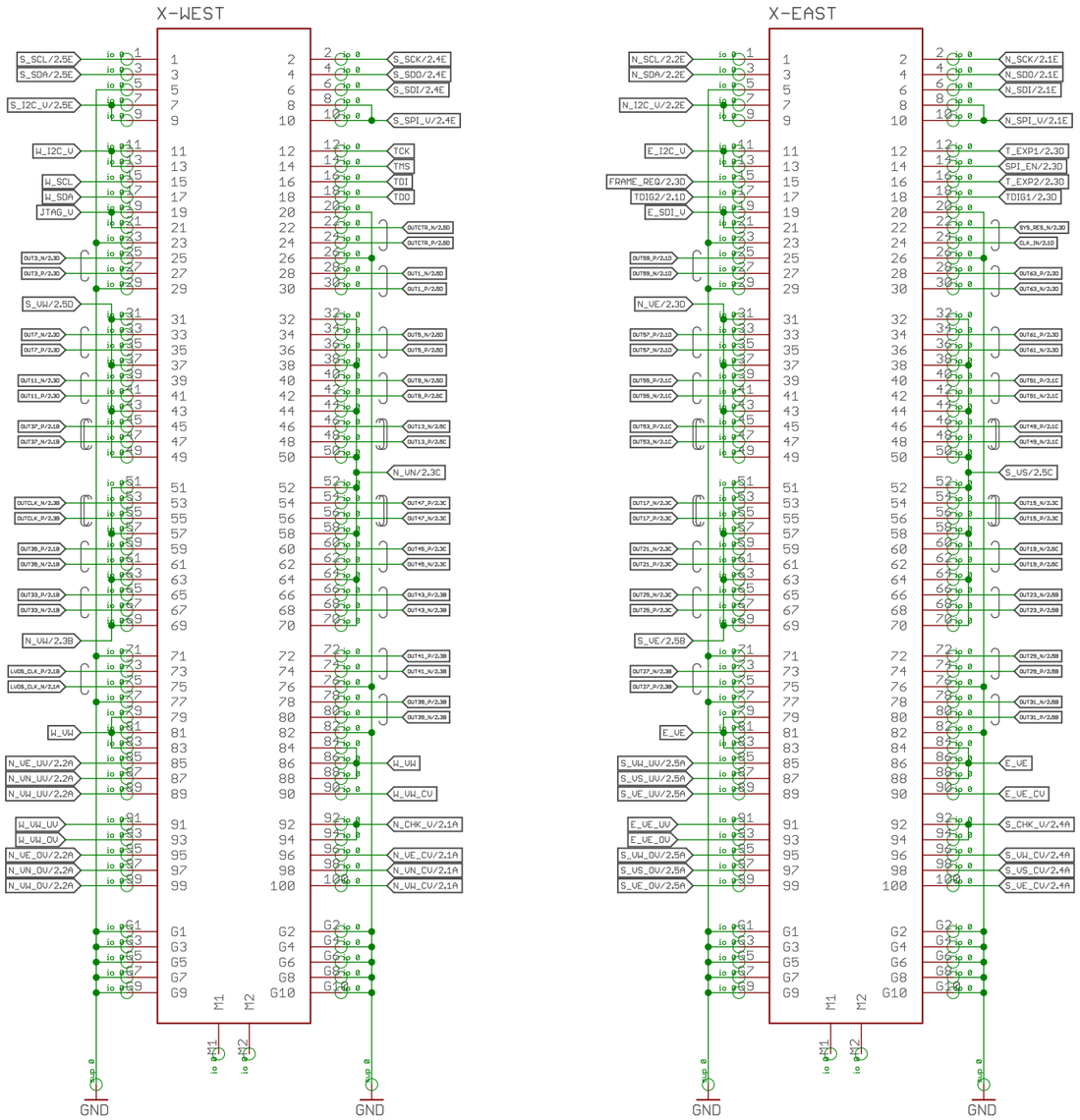

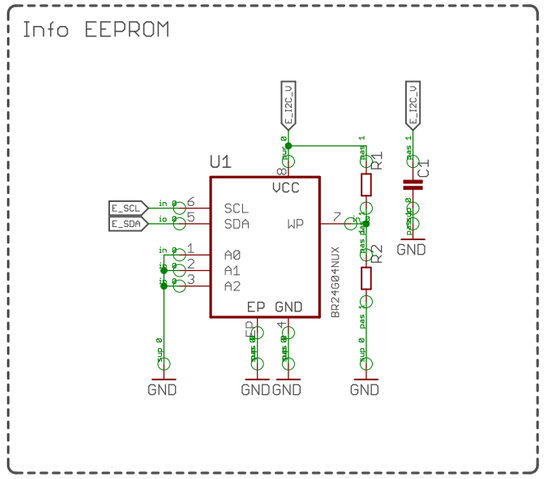

axiom_beta_interface_dummy_v0.7

17 Dec 2021 03:56:24

Sheet: 1/2

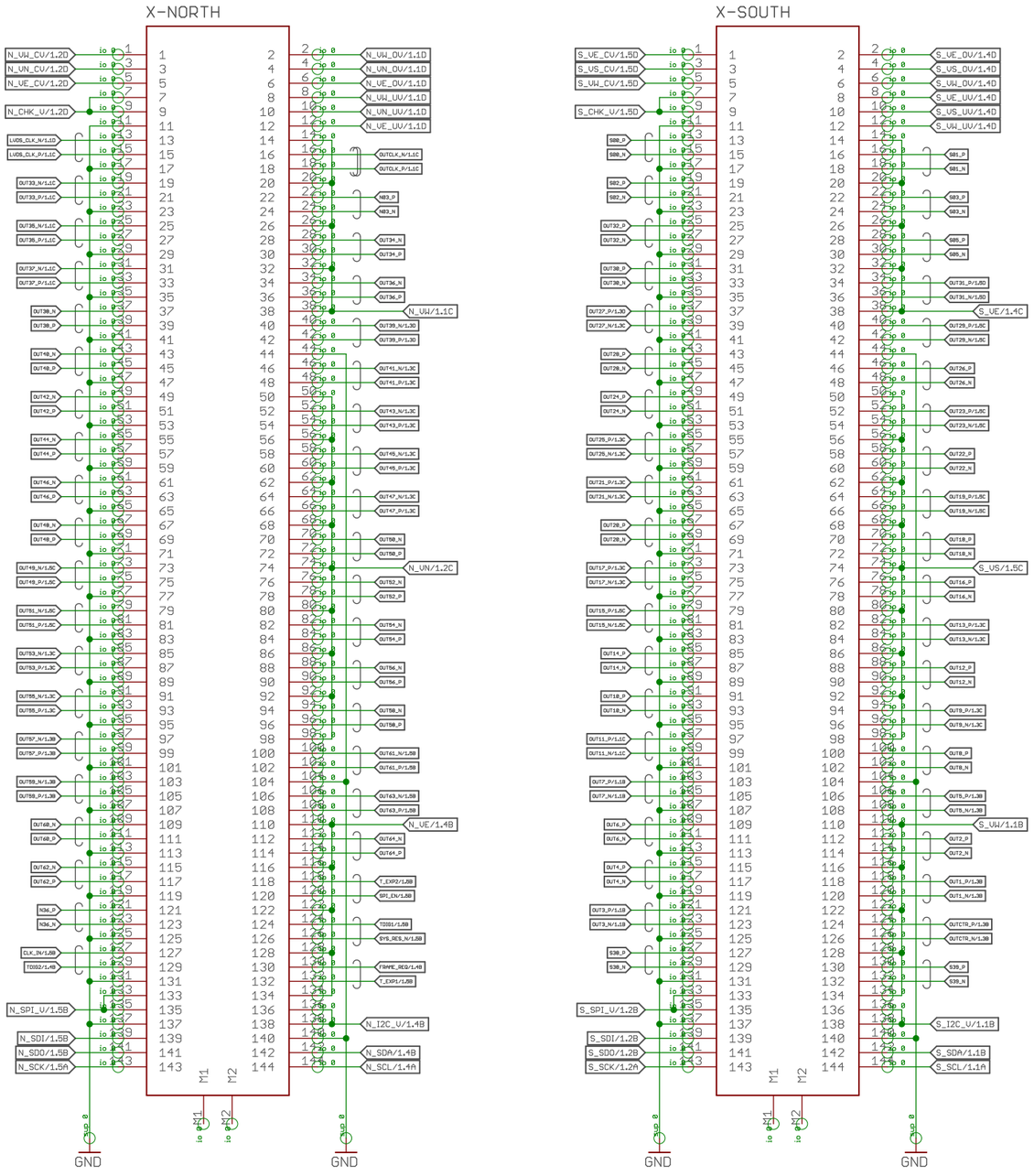

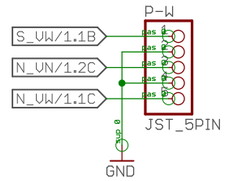

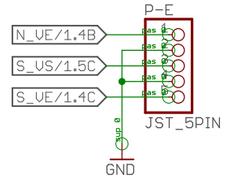

axiom_beta_interface_dummy_v0.7

17 Dec 2021 03:56:24

Sheet: 2/2