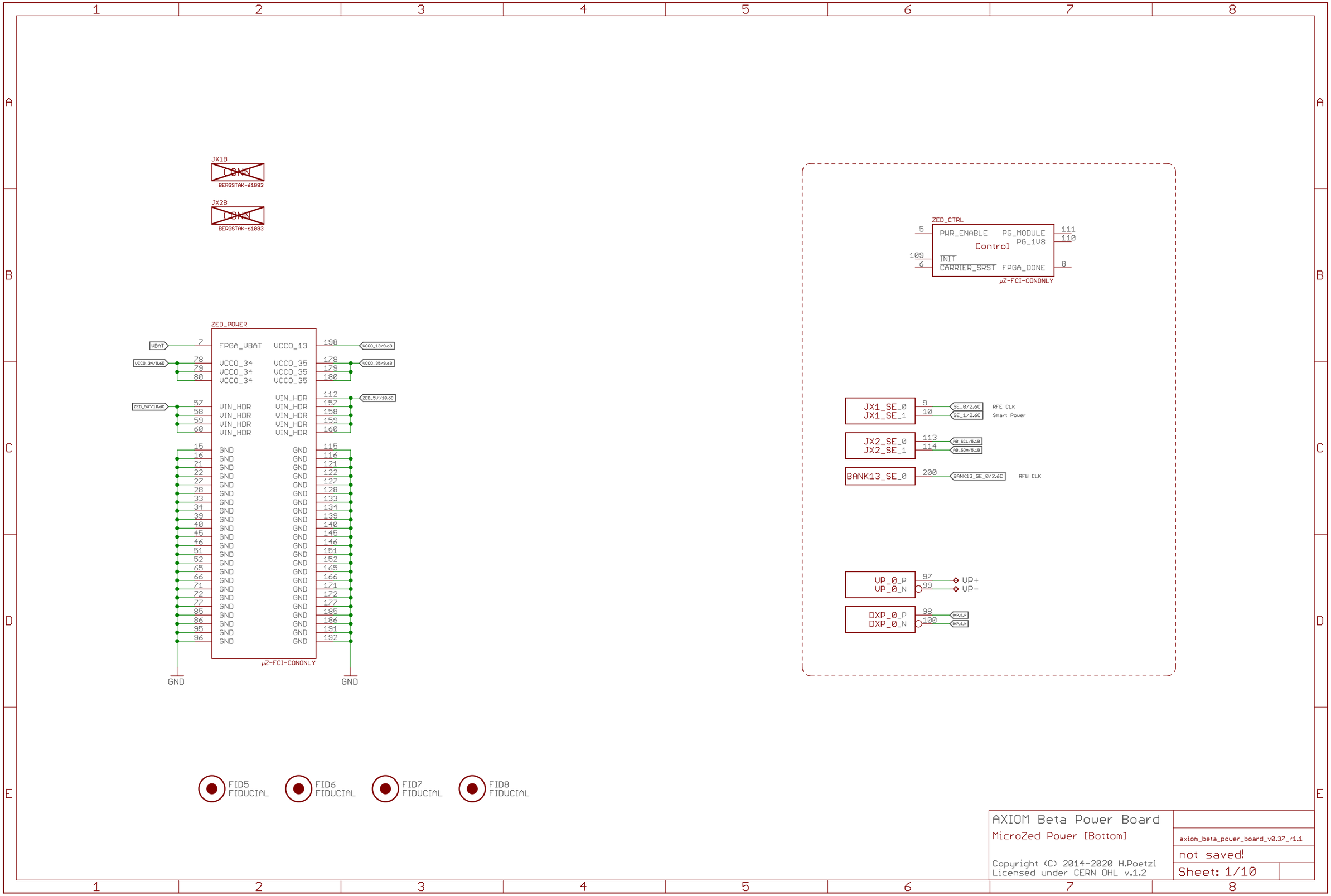

AXIOM Beta Power Board

MicroZed Power [Bottom]

axiom_beta_power_board_v0.37_r1.1

not saved!

Sheet: 1/10

Copyright (C) 2014-2020 H.Poetzl
Licensed under CERN OHL v.1.2

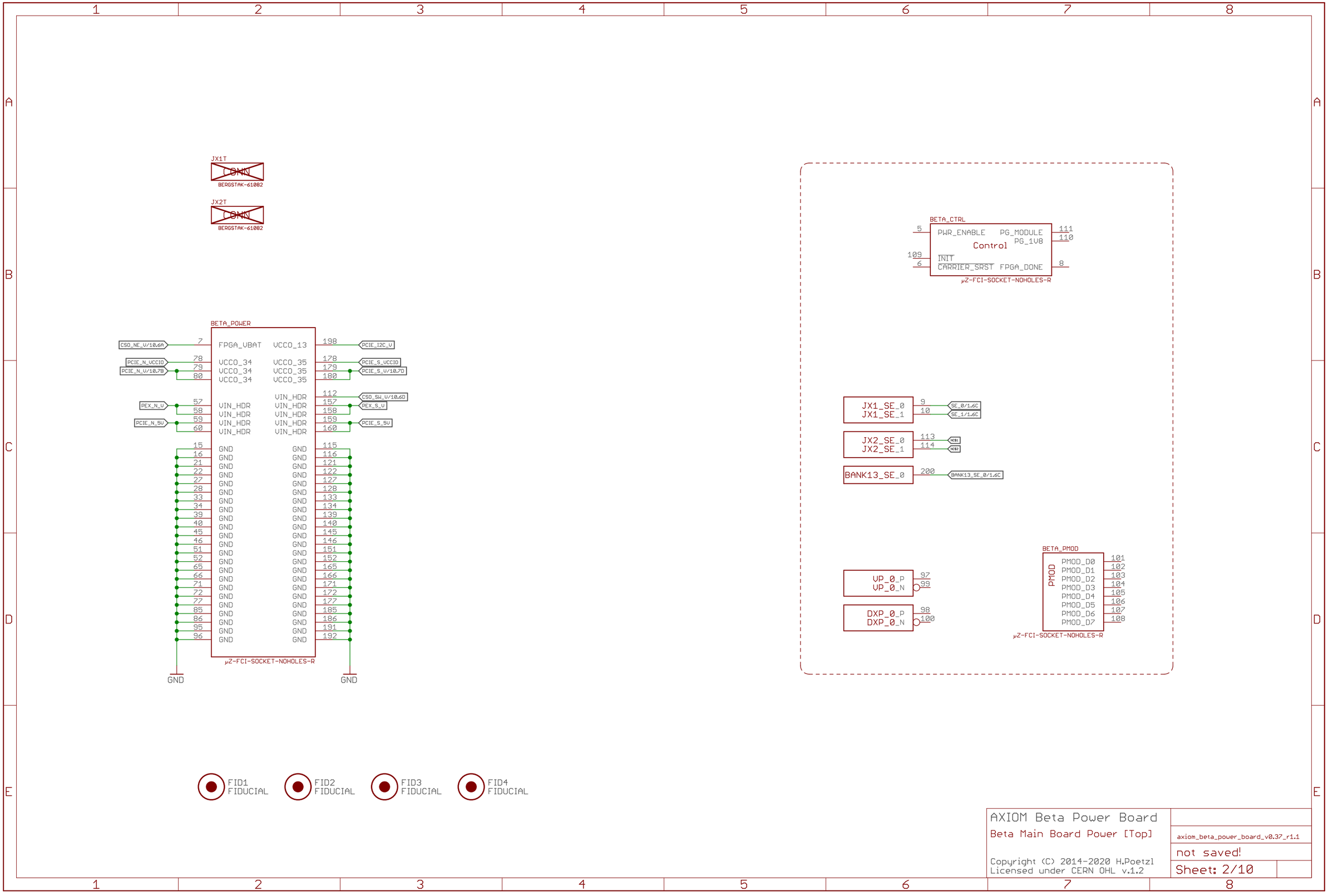

AXIOM Beta Power Board

Beta Main Board Power [Top]

axiom_beta_power_board_v0.37_r1.1

not saved!

Sheet: 2/10

Copyright (C) 2014-2020 H.Poetzl
Licensed under CERN OHL v.1.2

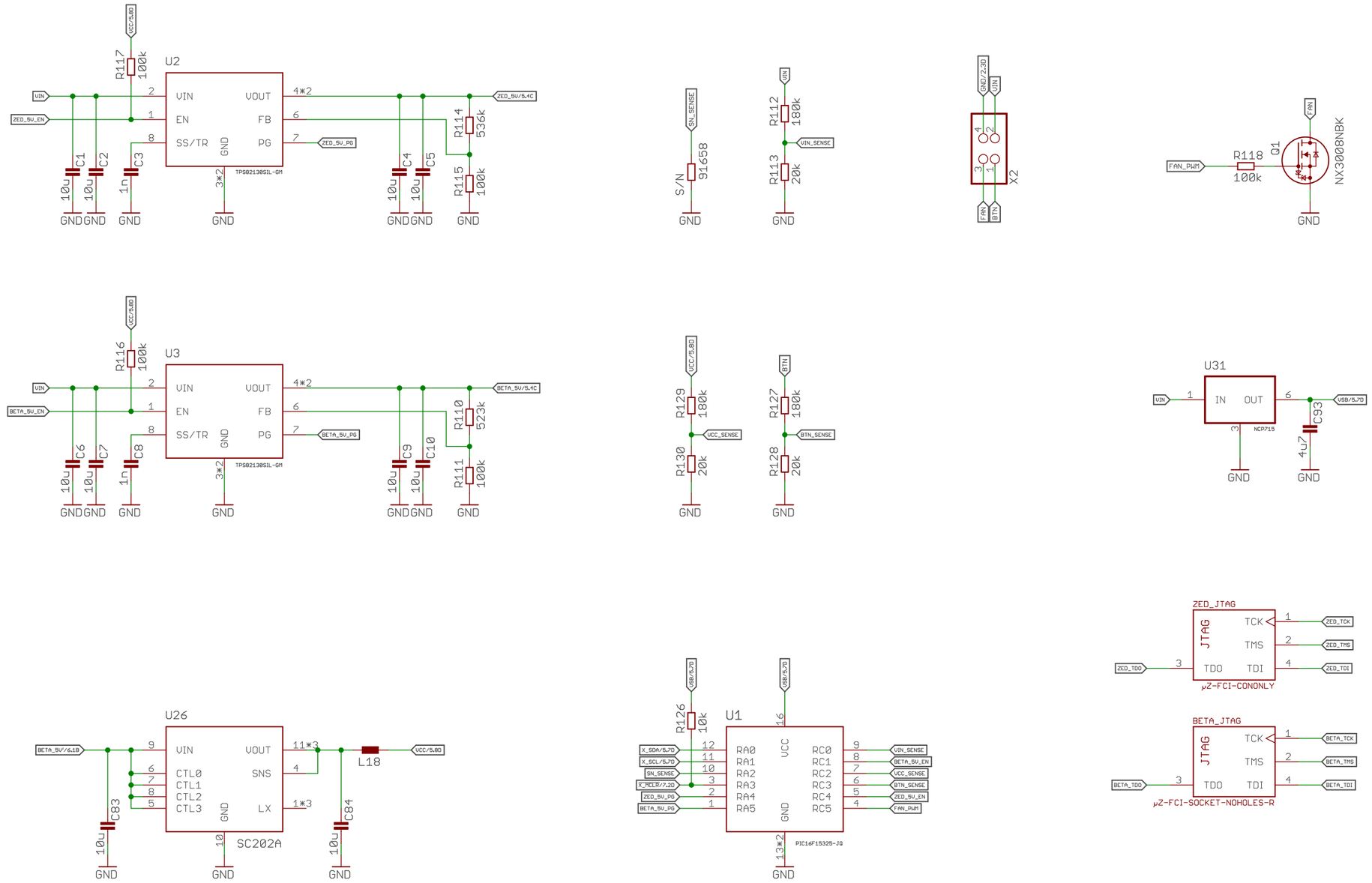

AXIOM Beta Power Board

Power Conversion and JTAG

Copyright (C) 2014-2020 H.Poetzl
Licensed under CERN OHL v.1.2

axiom_beta_power_board_v0.37_r1.1

not saved!

Sheet: 3/10

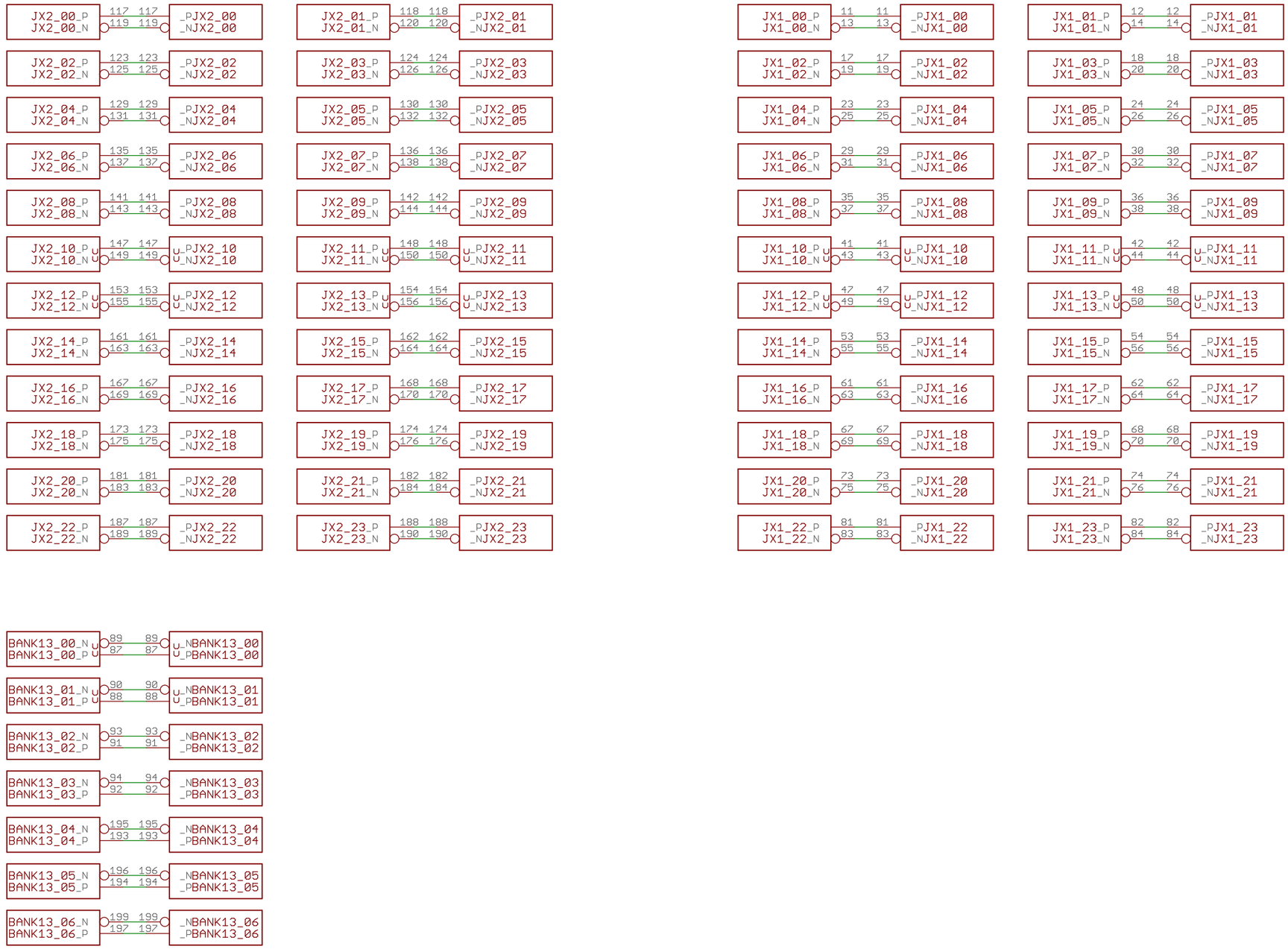

AXIOM Beta Power Board

LVDS Passthrough

axiom_beta_power_board_v0.37_r1.1

Copyright (C) 2014-2020 H.Poetzl
Licensed under CERN OHL v.1.2

not saved!

Sheet: 4/10

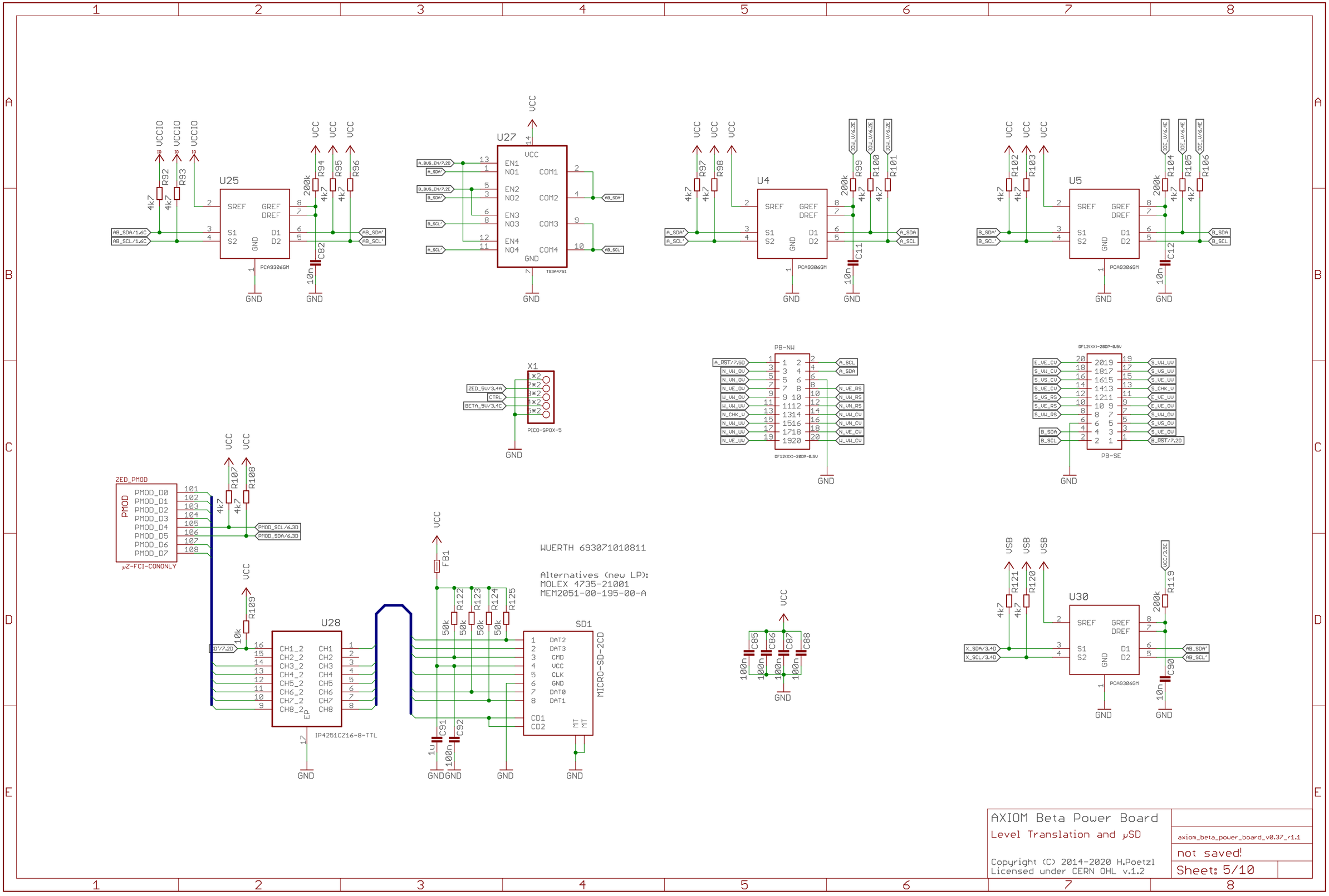
U25
PCA9306GM
U27
TS3A4751
U4
U5
X1
PICO-SPOX-5
PB-NW
PB-SE
ZED_PMOD
PMOD
µZ-FCI-CONONLY
U28
IP4251CZ16-8-TTL
SD1
MICRO-SD-2CD
WUERTH 693071010811
Alternatives (new LP):
MOLEX 4735-21001
MEM2051-00-195-00-A
U30
AXIOM Beta Power Board
Level Translation and µSD
axiom_beta_power_board_v0.37_r1.1
not saved!
Sheet: 5/10
Copyright (C) 2014-2020 H.Poetzl
Licensed under CERN OHL v.1.2

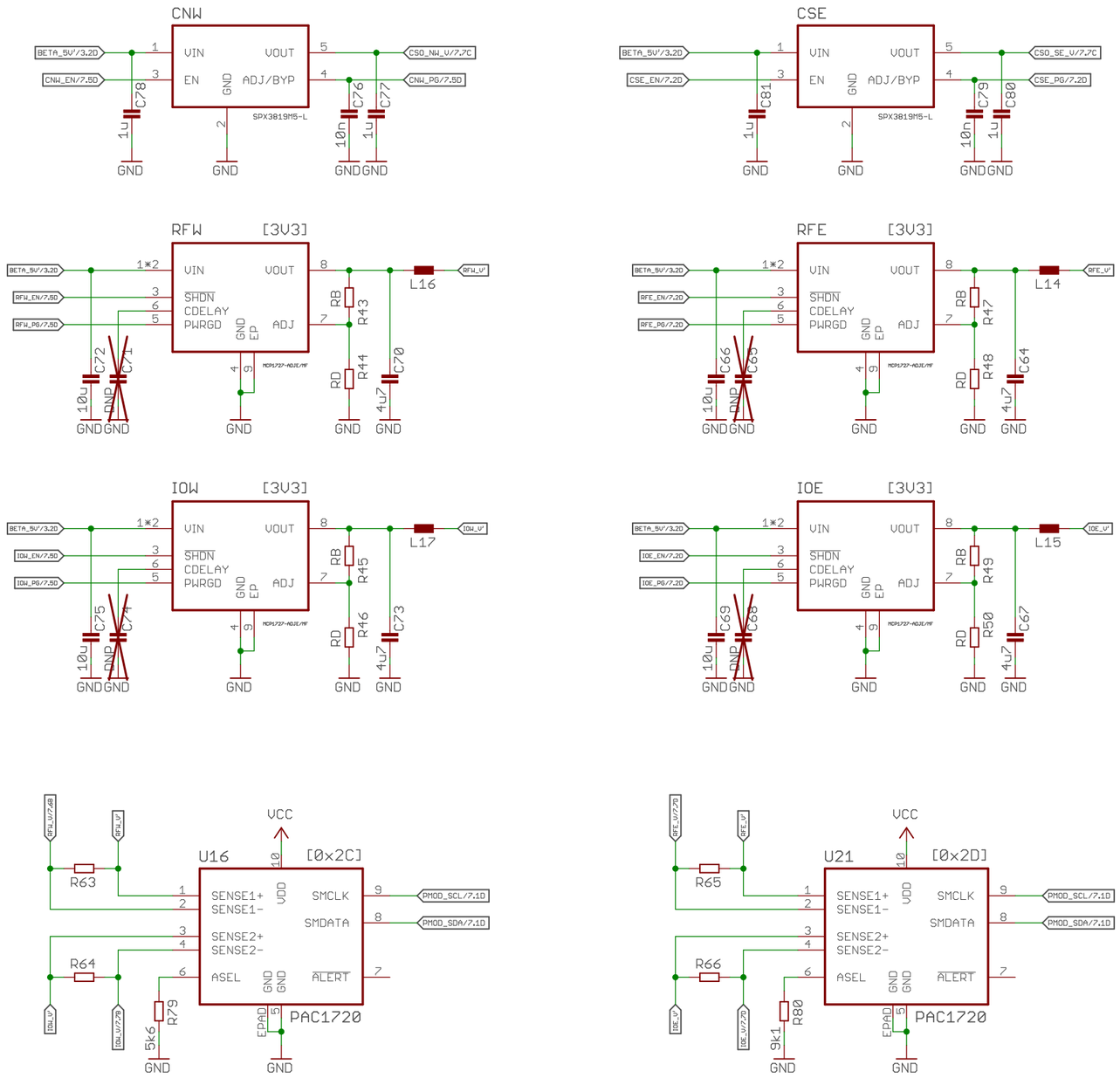

RB	RD	Voltage
68k,	20k	..... 1.804V
102k,	28k	..... 1.904V
124k,	32k	..... 1.999V
85k6,	22k	..... 2.005V
102k,	20k	..... 2.501V
124k,	19k6	.... 3.004V
180k,	25k5	.... 3.304V

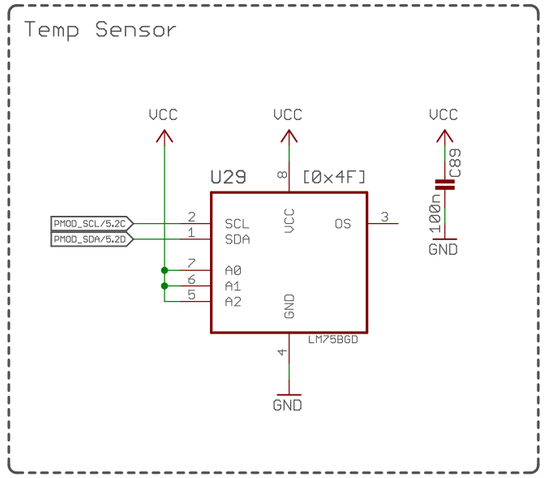

AXIOM Beta Power Board

Shield Power and Sensing

axiom_beta_power_board_v0.37_r1.1

not saved!

Sheet: 6/10

Copyright (C) 2014-2020 H.Poetzl
Licensed under CERN OHL v.1.2

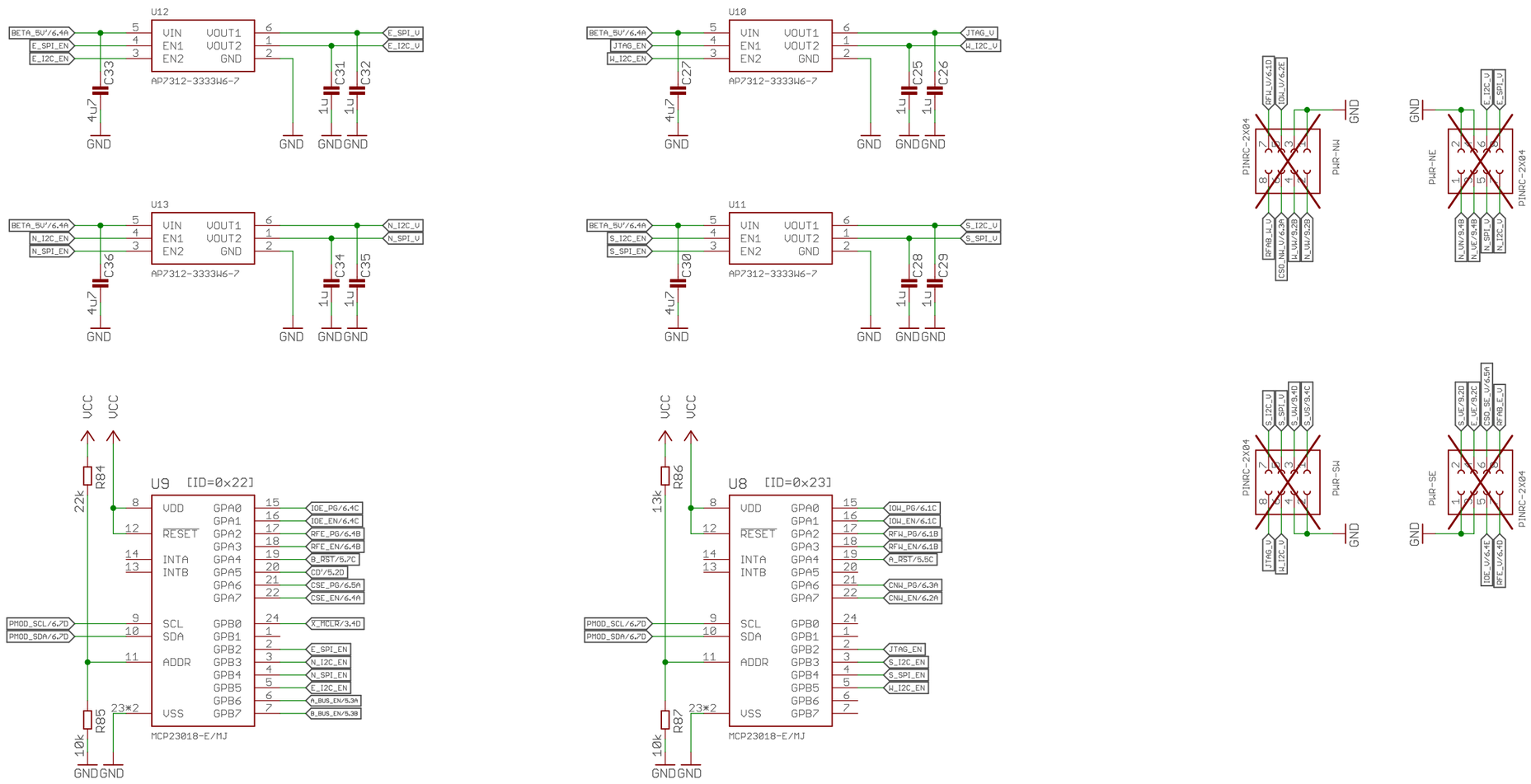

AXIOM Beta Power Board

Interface Power and Control

axiom_beta_power_board_v0.37_r1.1

not saved!

Sheet: 7/10

Copyright (C) 2014-2020 H.Poetzl
Licensed under CERN OHL v.1.2

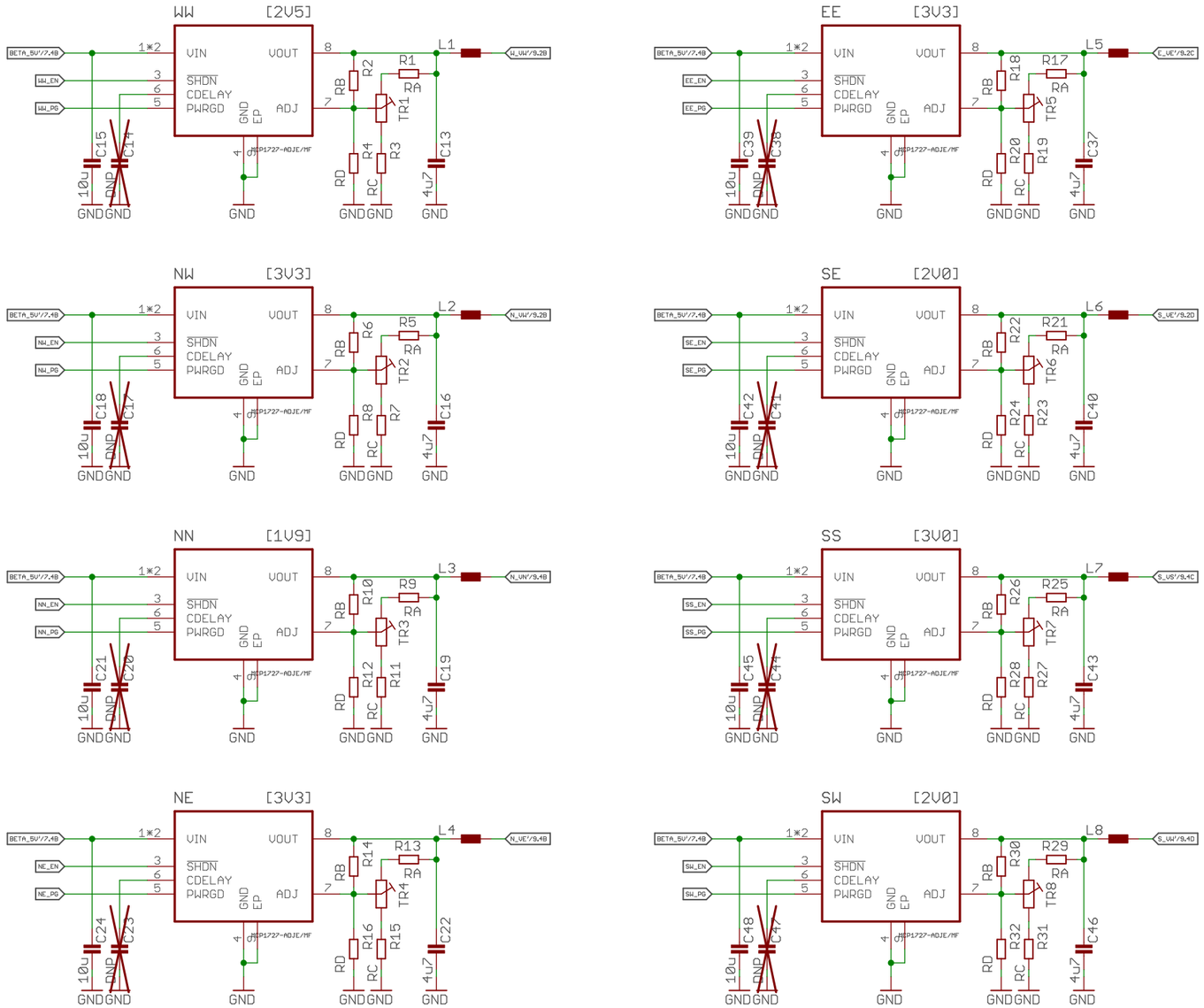

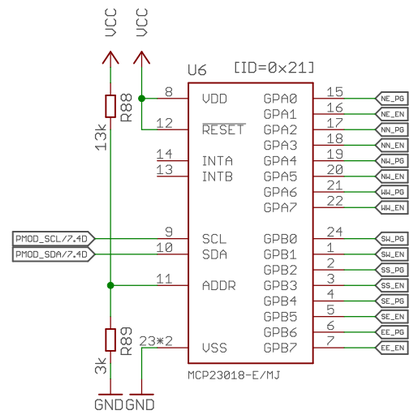

Optional remote sensing

RD	Trim	RA		Nom. Range
18k,	100k,	43k	.....	1.389V - 3.667V
20k,	100k,	62k	.....	1.681V - 3.731V
20k5,	100k,	68k	.....	1.770V - 3.770V
13k,	75k,	30k9	....	1.385V - 3.750V
12k4,	75k,	30k	.....	1.402V - 3.882V

RA	RB	RC	RD	Trim		Nom. Range
180k,	430k,	20k,	180k,	47k	.....	1.475V - 3.794V
240k,	240k,	18k,	160k,	47k	.....	1.474V - 3.722V
147k,	255k,	14k3,	143k,	47k	.....	1.301V - 3.885V
390k,	360k,	30k,	160k,	100k	.....	1.480V - 3.778V
309k,	365k,	26k1,	191k,	100k	.....	1.313V - 3.854V
324k,	432k,	30k1,	182k,	75k	.....	1.550V - 3.703V

AXIOM Beta Power Board

Sensor Power and Control

Copyright (C) 2014-2020 H.Poetzl
Licensed under CERN OHL v.1.2

axiom_beta_power_board_v0.37_r1.1

not saved!

Sheet: 8/10

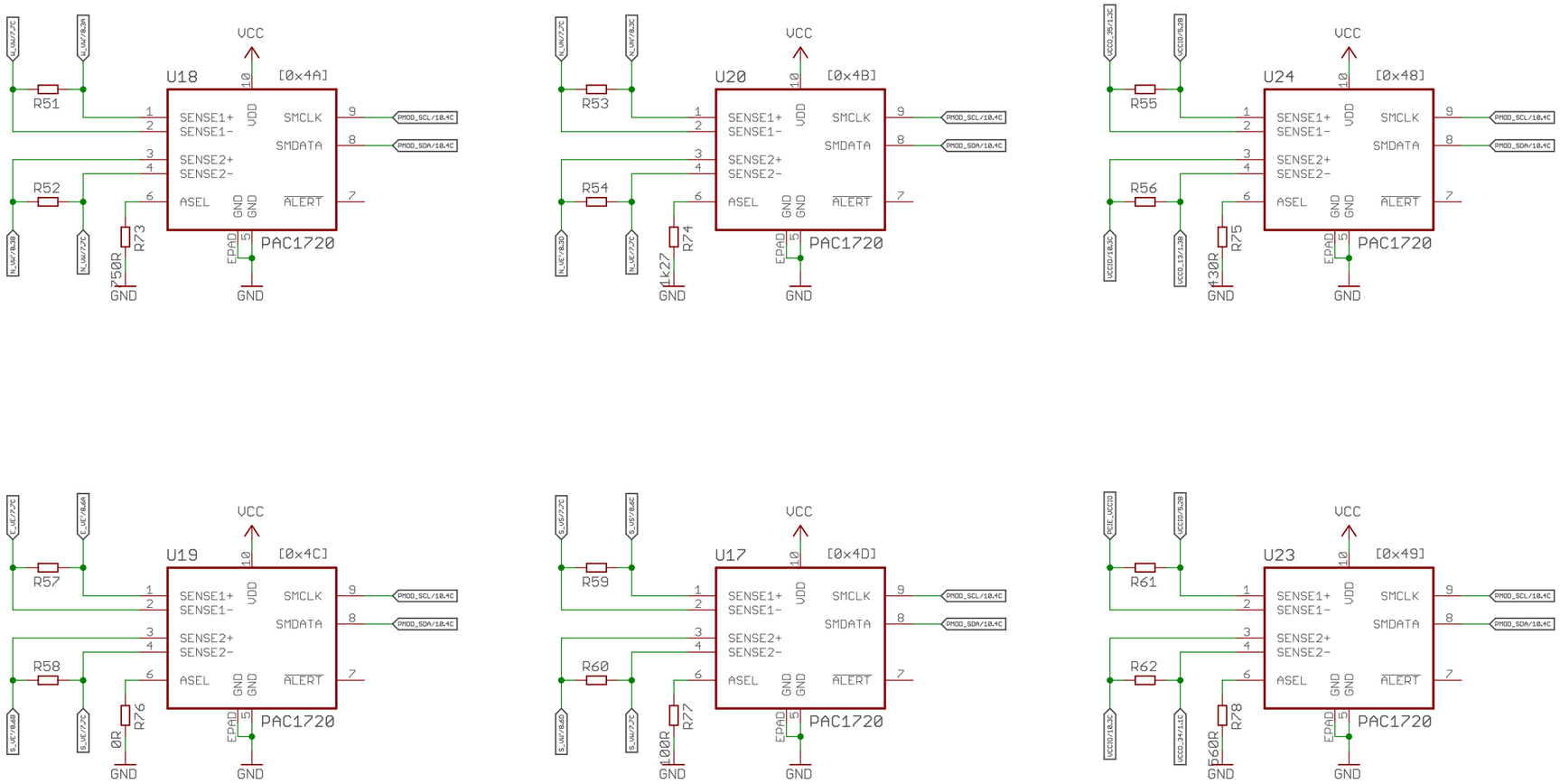

AXIOM Beta Power Board

Sensor Power Sensing

axiom_beta_power_board_v0.37_r1.1

not saved!

Sheet: 9/10

Copyright (C) 2014-2020 H.Poetzl
Licensed under CERN OHL v.1.2

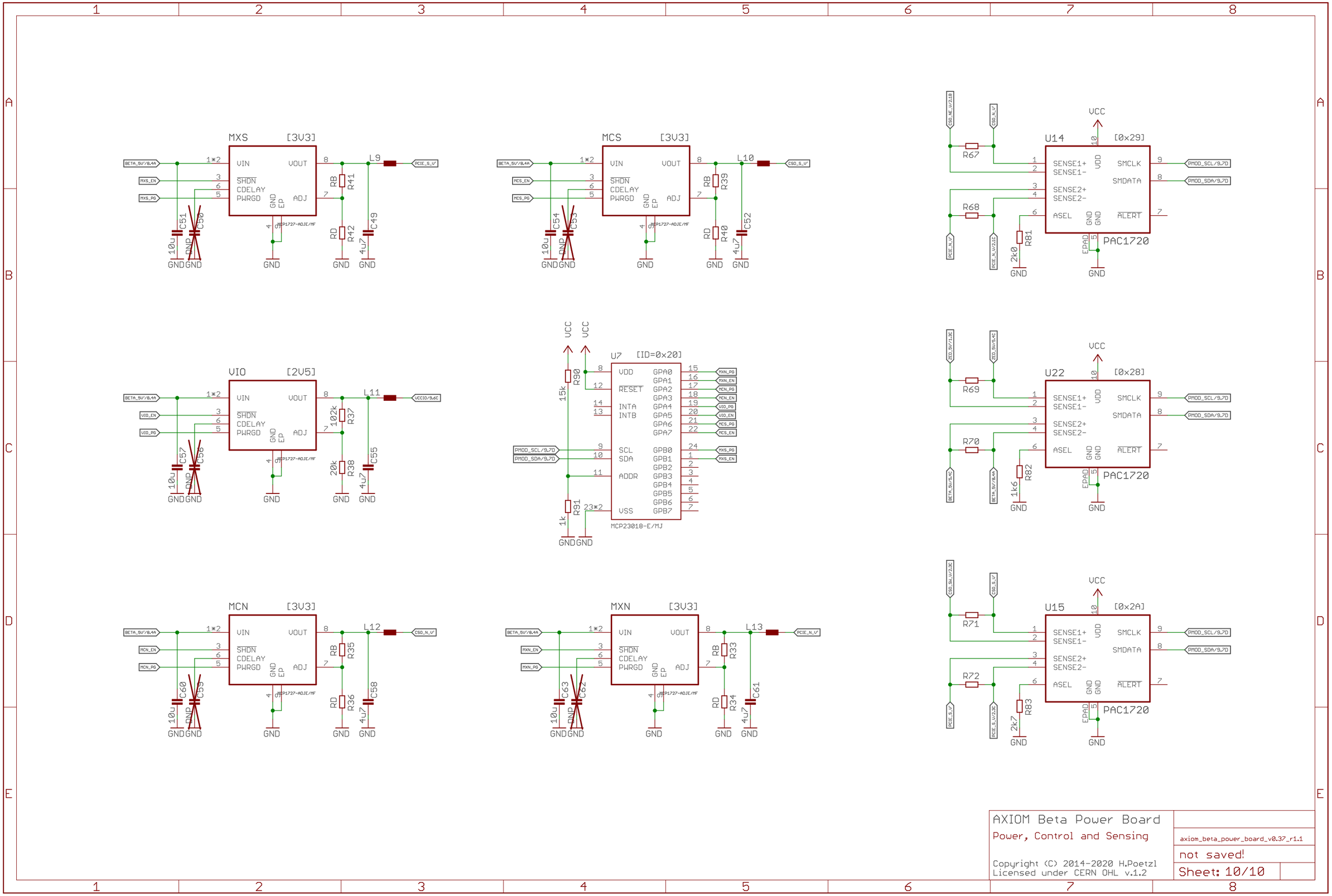
MXS [3V3]
MCS [3V3]
VIO [2V5]
MCN [3V3]
MXN [3V3]
U7 [ID=0x20]
MCP23018-E/MJ
U14 [0x29]
U22 [0x28]
U15 [0x2A]
PAC1720
VCC
AXIOM Beta Power Board
Power, Control and Sensing
axiom_beta_power_board_v0.37_r1.1
not saved!
Sheet: 10/10
Copyright (C) 2014-2020 H.Poetzl
Licensed under CERN OHL v.1.2