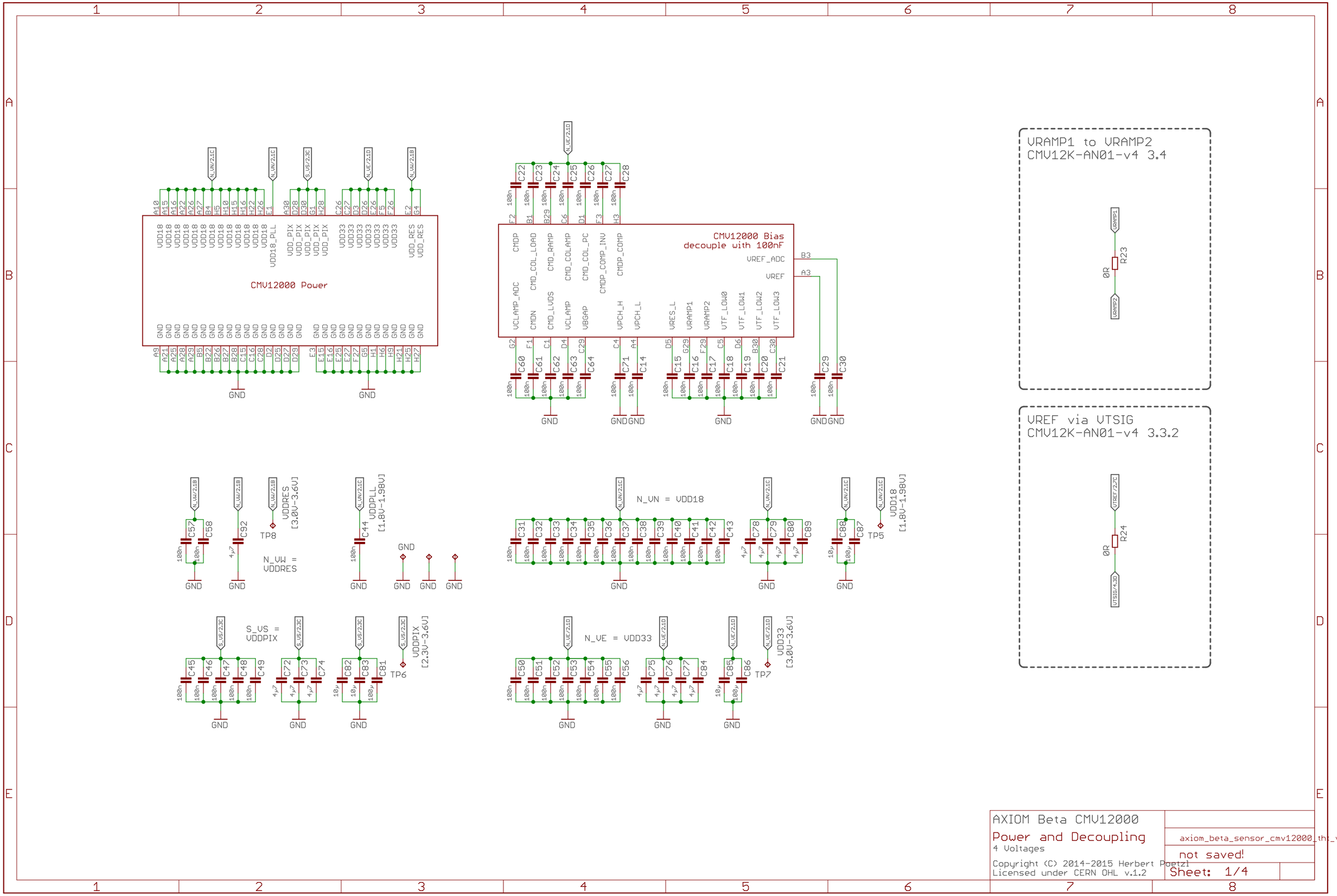
CMV12000 Power
CMV12000 Bias
decouple with 100nF
VRAMP1 to VRAMP2
CMV12K-AN01-v4 3.4
VREF via VTSIG
CMV12K-AN01-v4 3.3.2
N_VW = VDDRES
VDDRES [3.0V-3.6V]
VDDPLL [1.8V-1.98V]
N_VN = VDD18
VDD18 [1.8V-1.98V]
S_VS = VDDPIX
VDDPIX [2.3V-3.6V]
N_VE = VDD33
VDD33 [3.0V-3.6V]
GND
AXIOM Beta CMV12000
Power and Decoupling
4 Voltages
Copyright (C) 2014-2015 Herbert Poetzl
Licensed under CERN OHL v.1.2
axiom_beta_sensor_cmv12000_thr_v0.16_r1.4c
not saved!
Sheet: 1/4

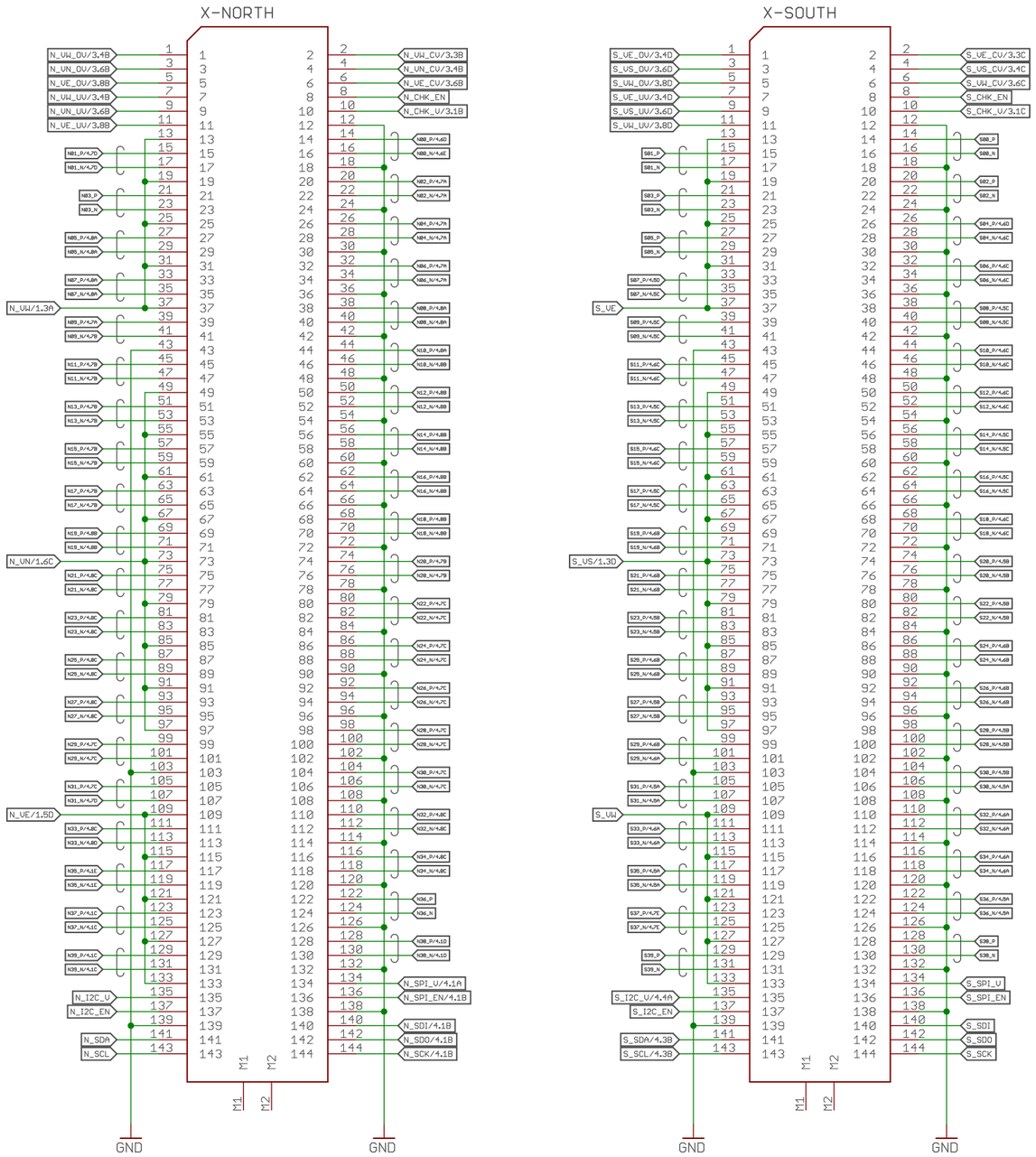

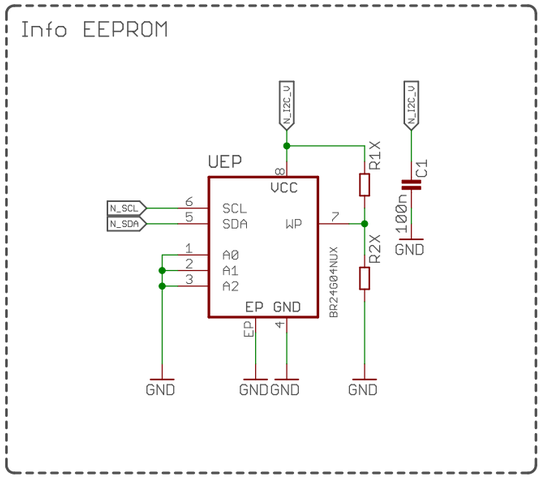

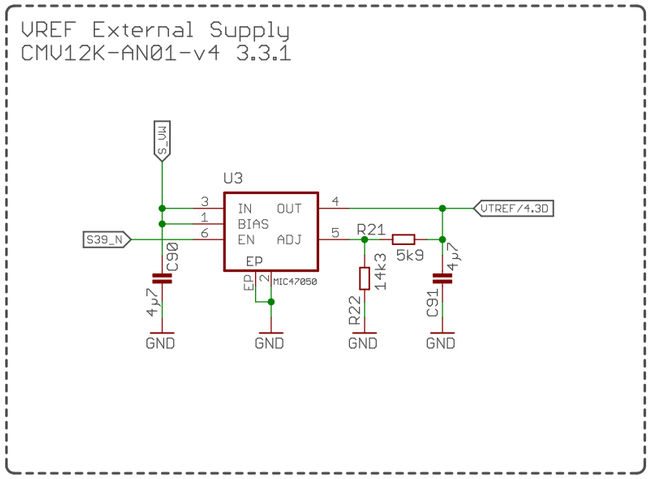

AXIOM Beta CMV12000

Interface, Info and VREF

Optional VREF Supply

Copyright (C) 2014-2015 Herbert Poetzl
Licensed under CERN OHL v.1.2

axiom_beta_sensor_cmv12000_thr_v0.16_r1.4c

not saved!

Sheet: 2/4

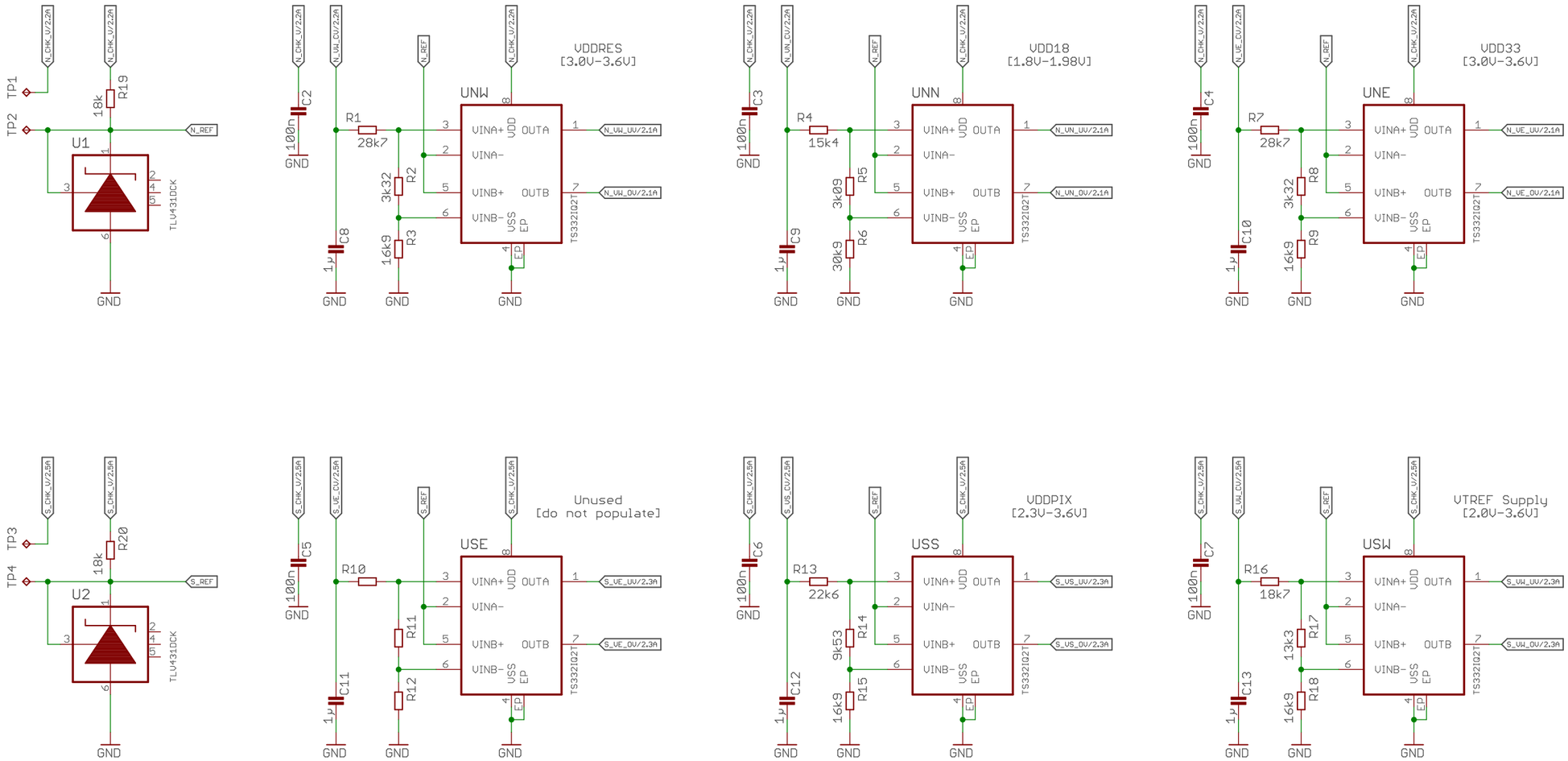

AXIOM Beta CMV12000

Over/Under Voltage Check

4/5 Voltages

axiom_beta_sensor_cmv12000_tht_v0.16_r1.4c

not saved!

Copyright (C) 2014-2015 Herbert Poetzl
Licensed under CERN OHL v.1.2

Sheet: 3/4

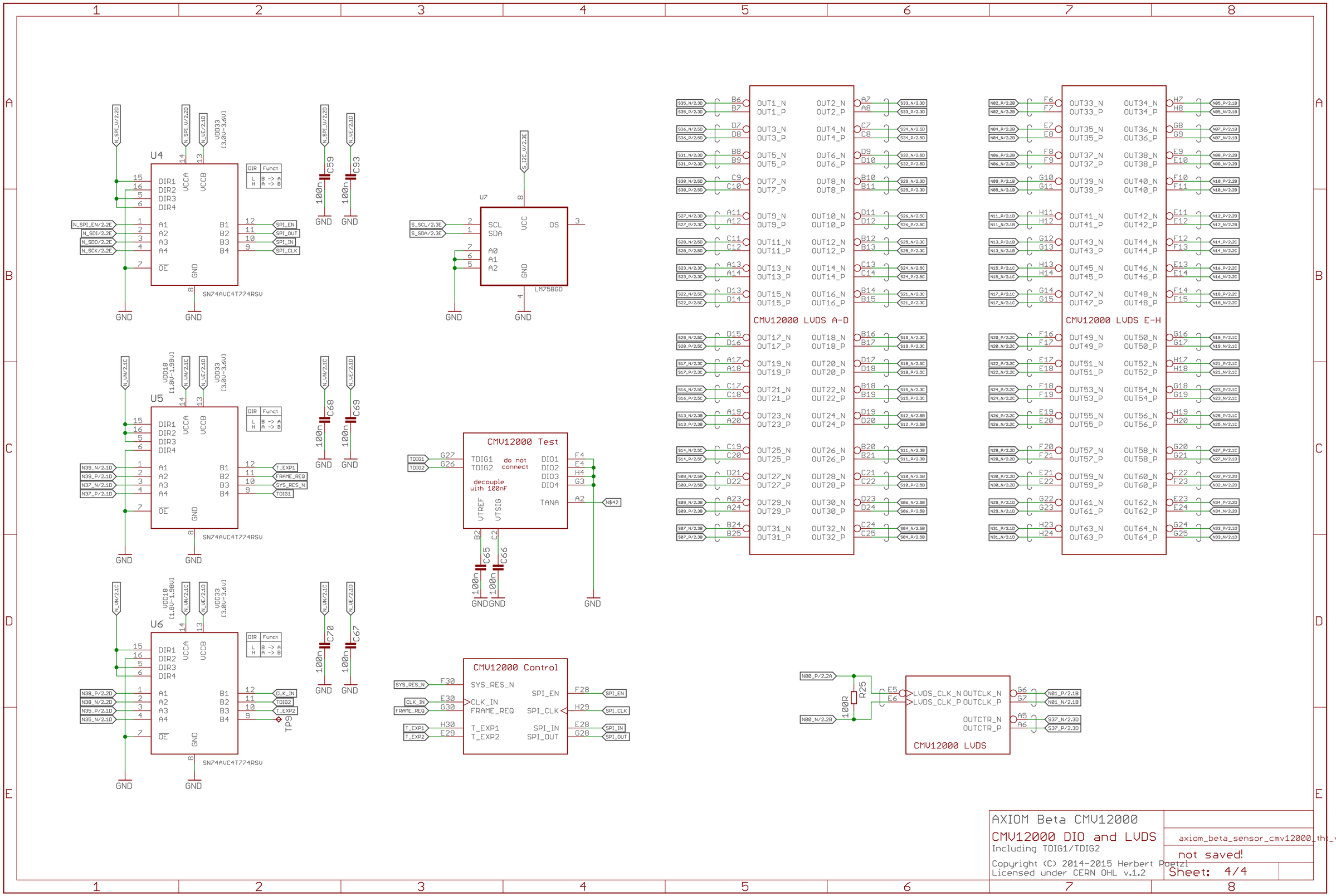

Copyright (C) 2014-2015 Herbert Poetzl
Licensed under CERN OHL v.1.2