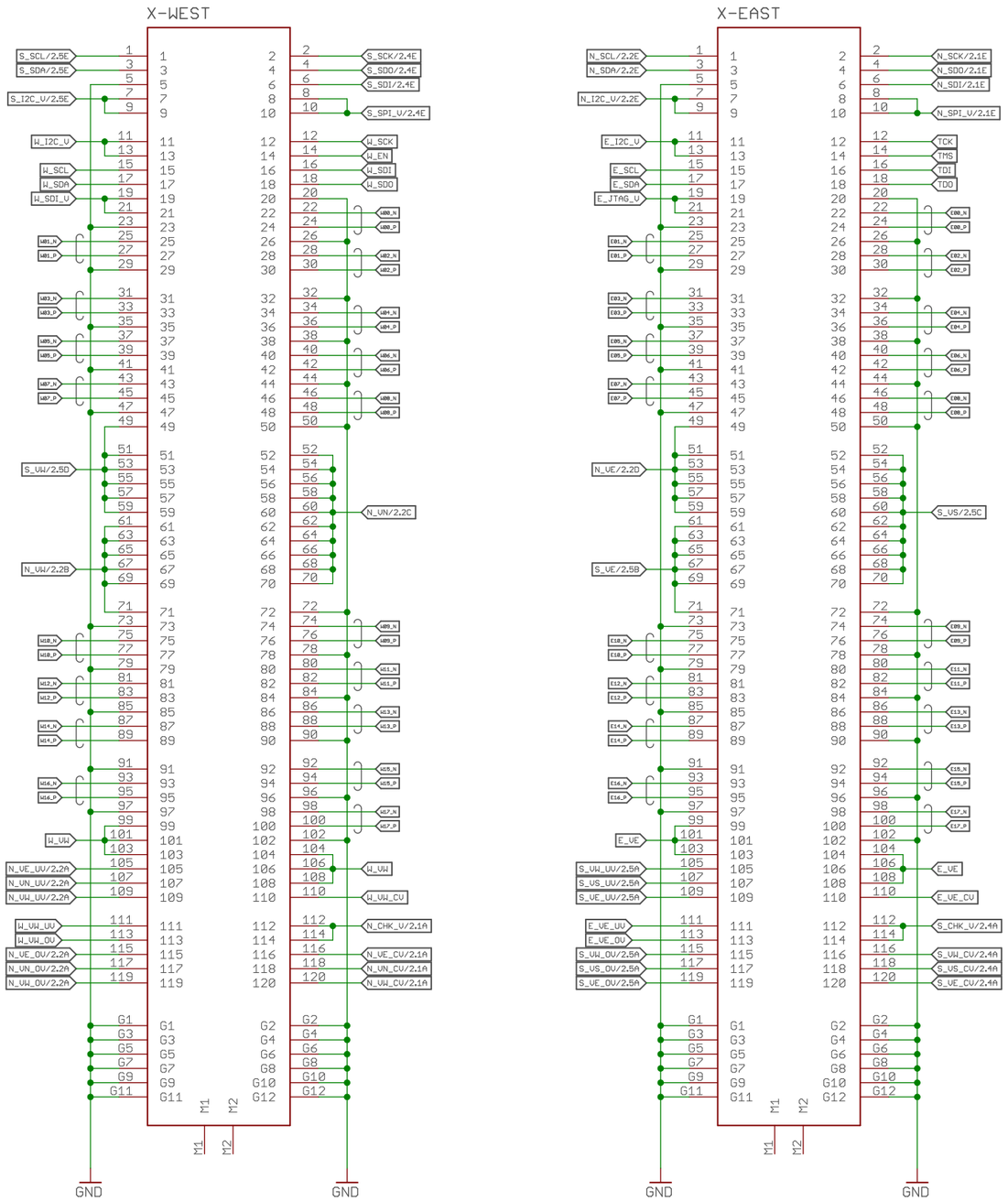

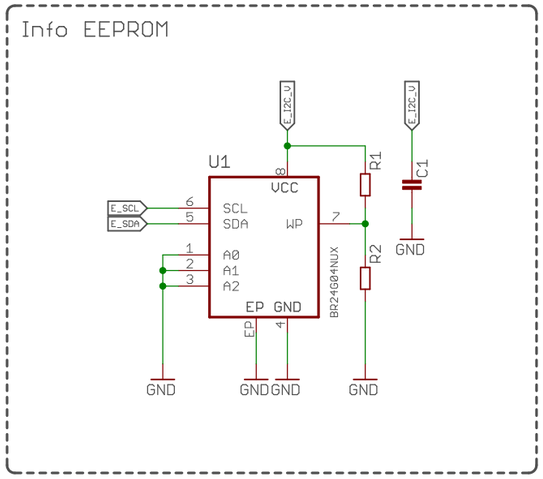

AXIOM Beta Interface Template

Beta Board Interface

Generic

Copyright (C) 2014 Herbert Poetzl
Licensed under CERN OHL v.1.2

axiom_beta_interface_cmv12000_v0.3

17 Dec 2021 04:00:13

Sheet: 1/2

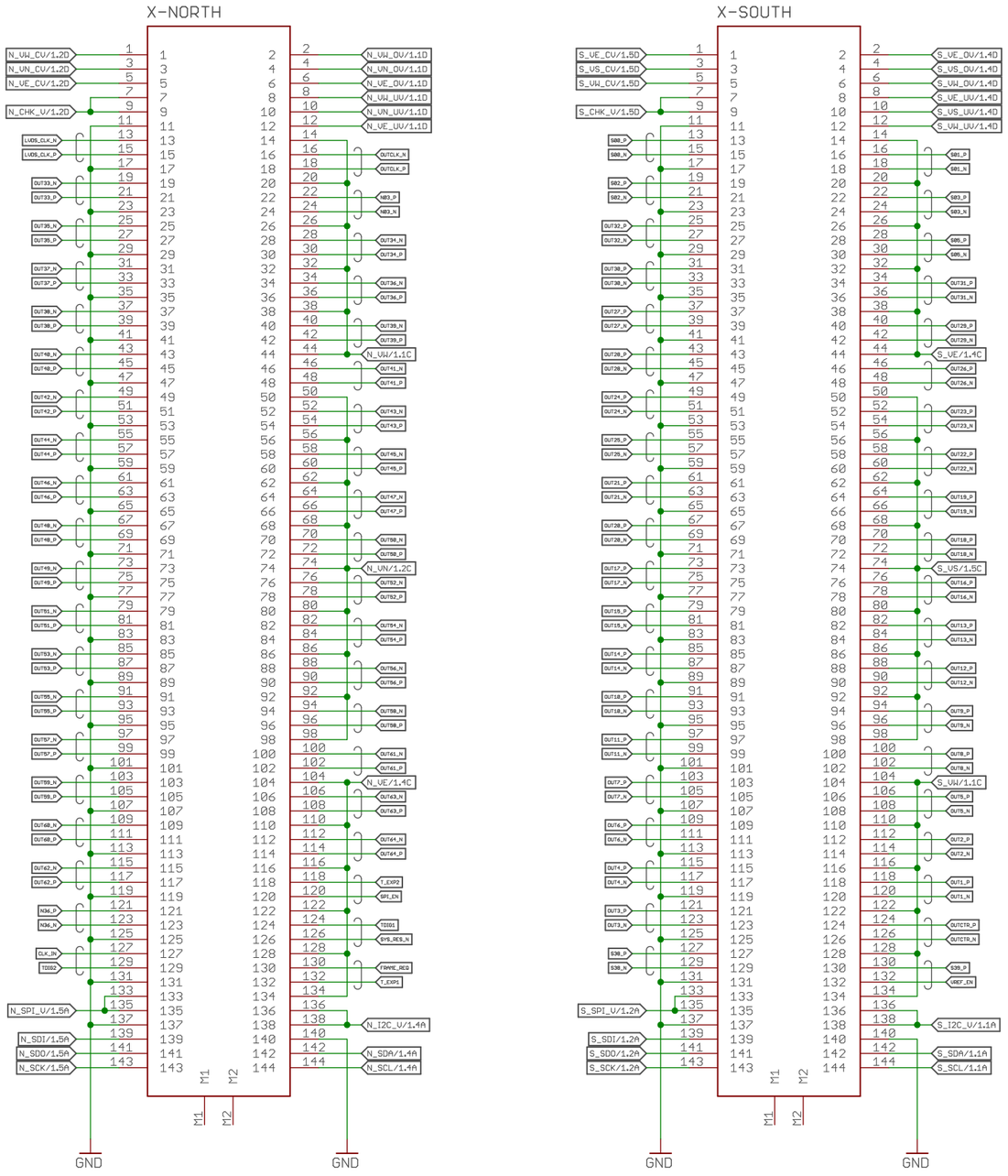

AXIOM Beta Interface Template

Sensor Board Interface

CMV12000 Specific

Copyright (C) 2014 Herbert Poetzl
Licensed under CERN OHL v.1.2

axiom_beta_interface_cmv12000_v0.3

17 Dec 2021 04:00:13

Sheet: 2/2