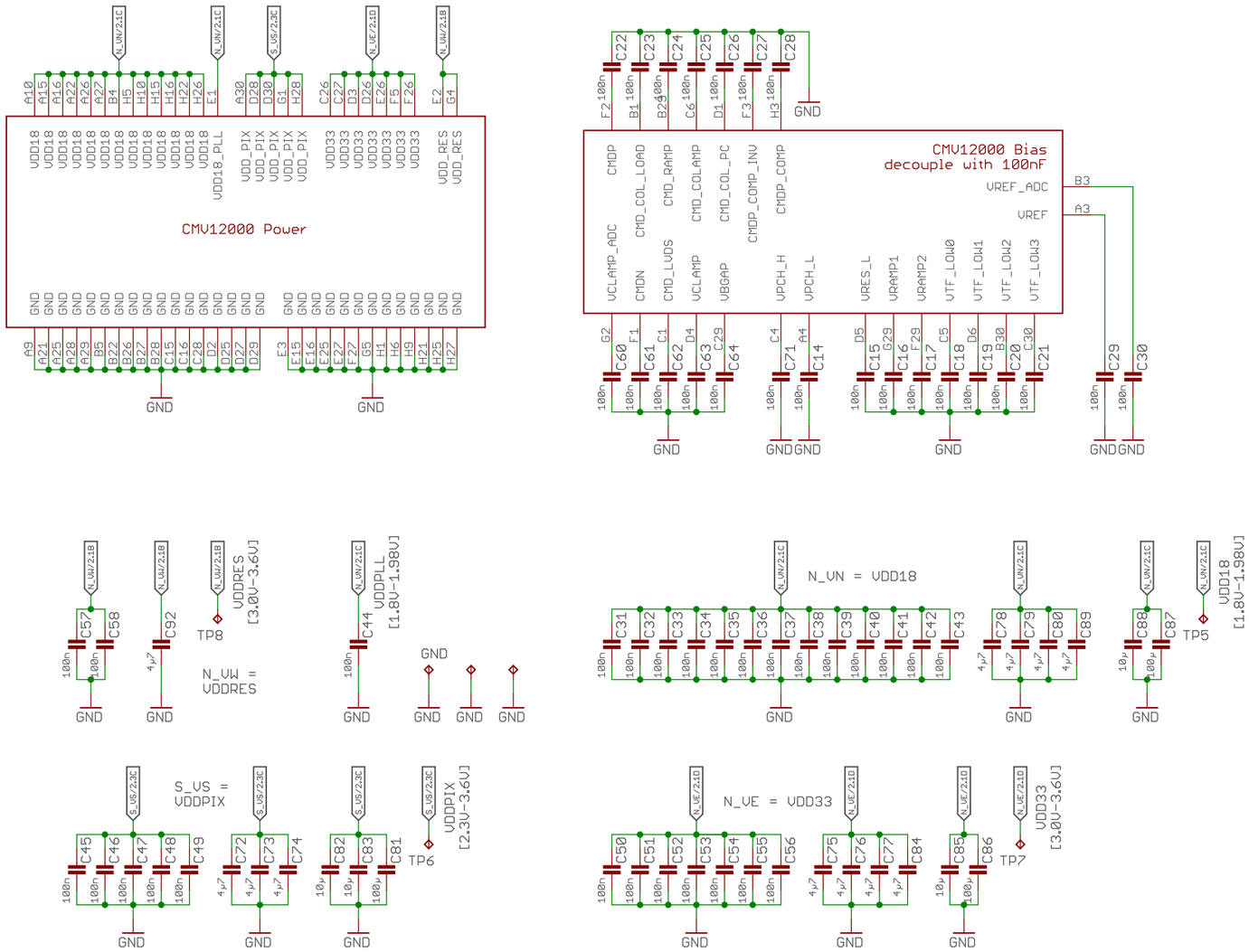

VRAMP1 to VRAMP2
CMV12K-AN01-v4 3.4

VREF via VTSIG
CMV12K-AN01-v4 3.3.2

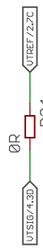

AXIOM Beta CMV12000

Power and Decoupling

4 Voltages

Copyright (C) 2014-2015 Herbert Poetzl
Licensed under CERN OHL v.1.2

axiom_beta_sensor_cmv12000_v0.14_tht

12/14/21 7:01 PM

Sheet: 1/4

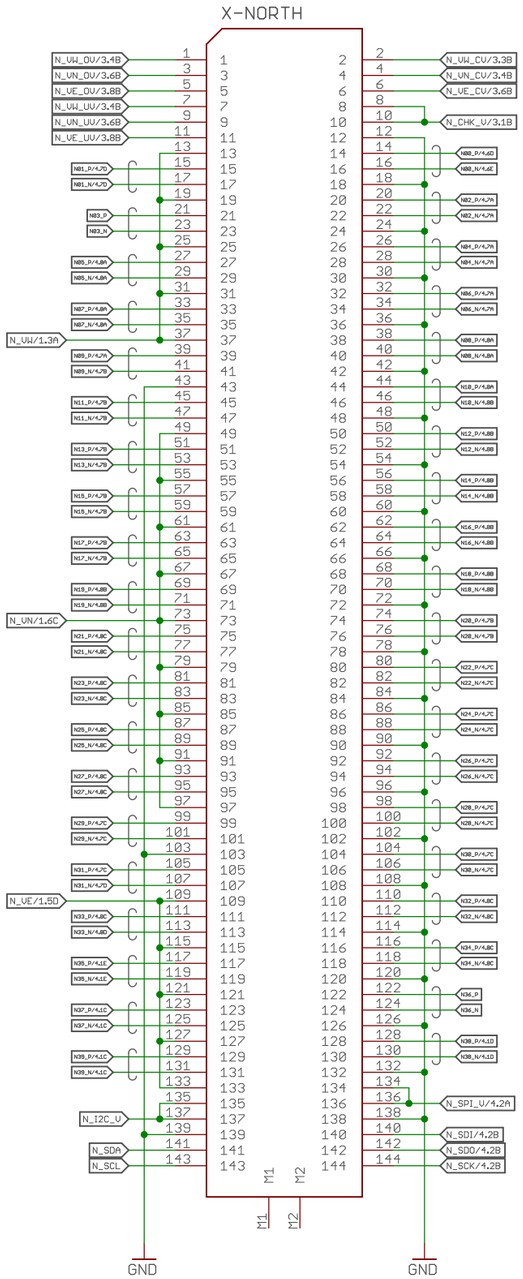

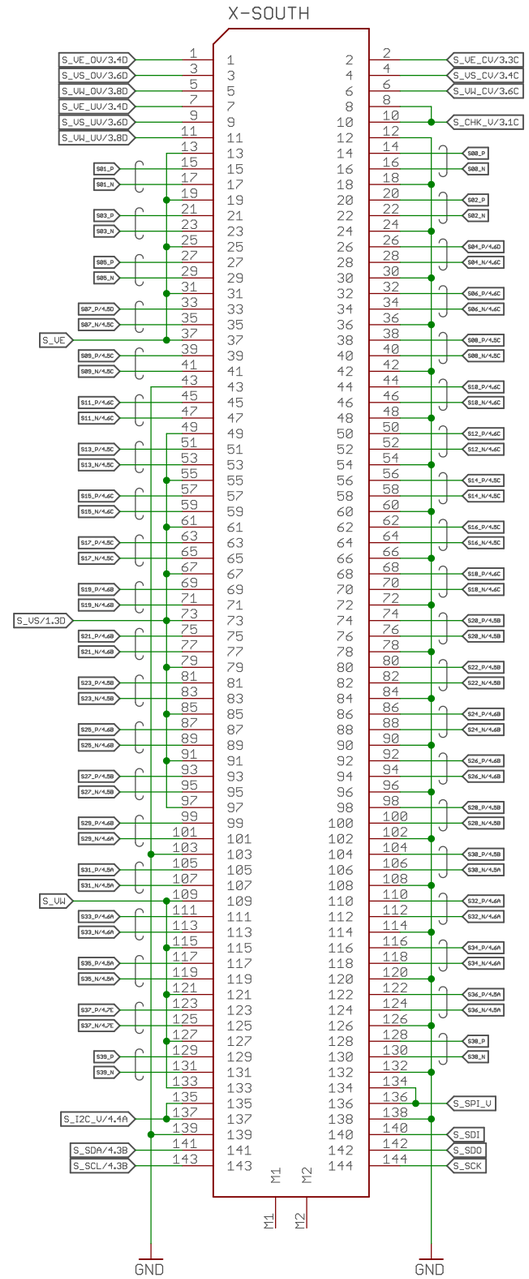

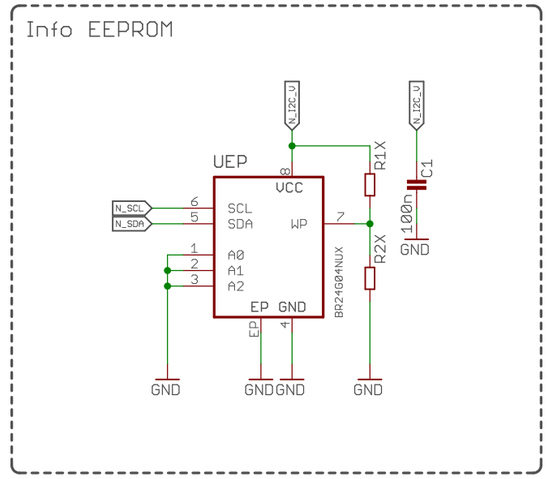

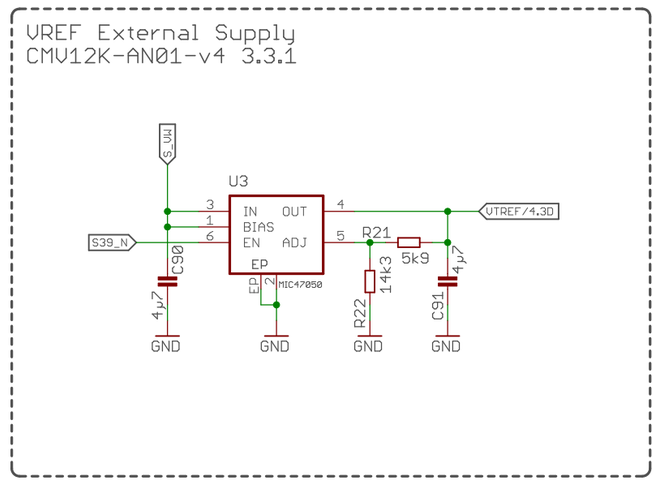

AXIOM Beta CMV12000

Interface, Info and VREF

Optional VREF Supply

Copyright (C) 2014-2015 Herbert Poetzl
Licensed under CERN OHL v.1.2

axiom_beta_sensor_cmv12000_v0.14_tht

12/14/21 7:01 PM

Sheet: 2/4

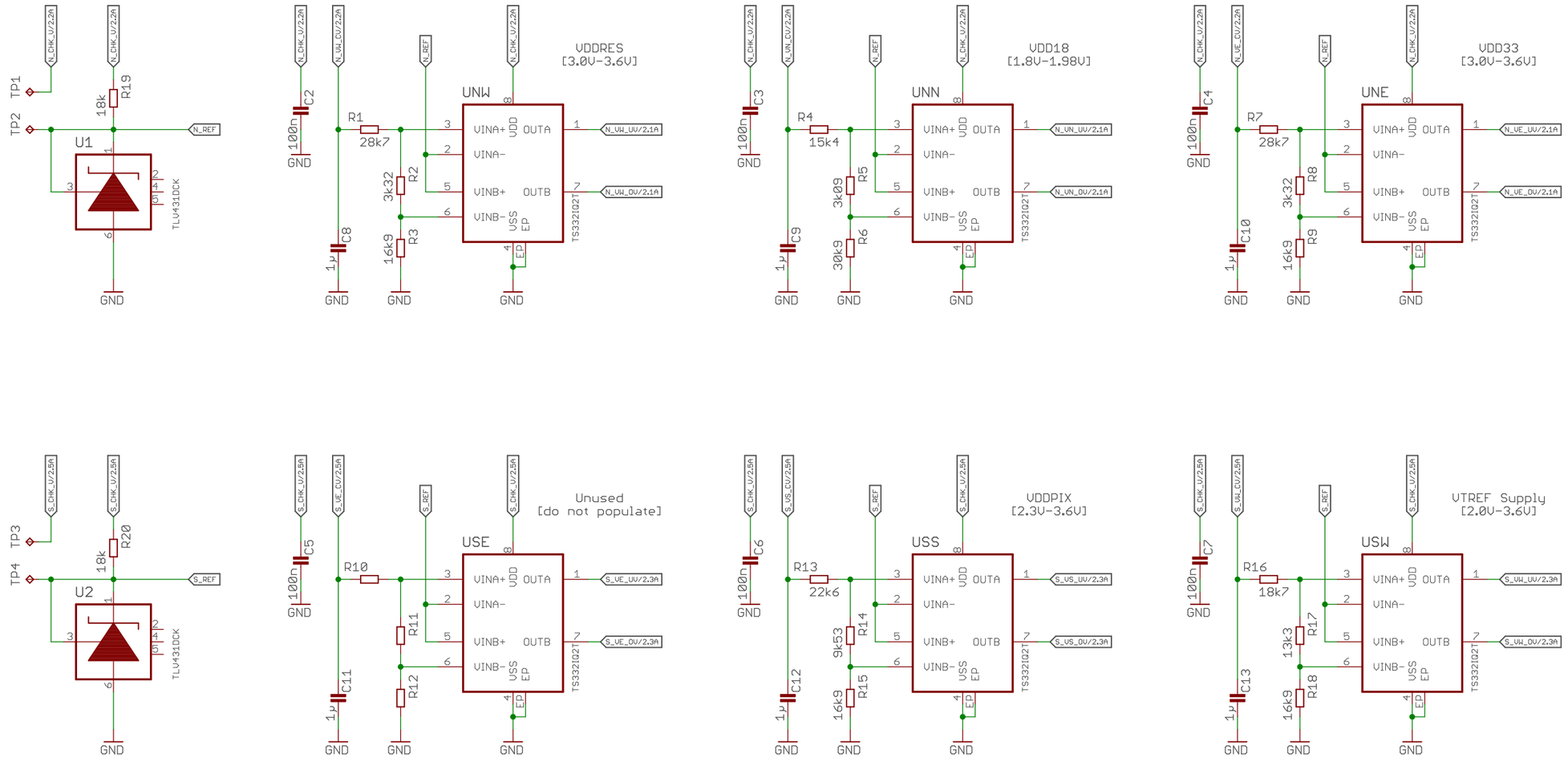

AXIOM Beta CMV12000

Over/Under Voltage Check

4/5 Voltages

axiom_beta_sensor_cmv12000_v0.14_tht

12/14/21 7:01 PM

Sheet: 3/4

Copyright (C) 2014-2015 Herbert Poetzl
Licensed under CERN OHL v.1.2

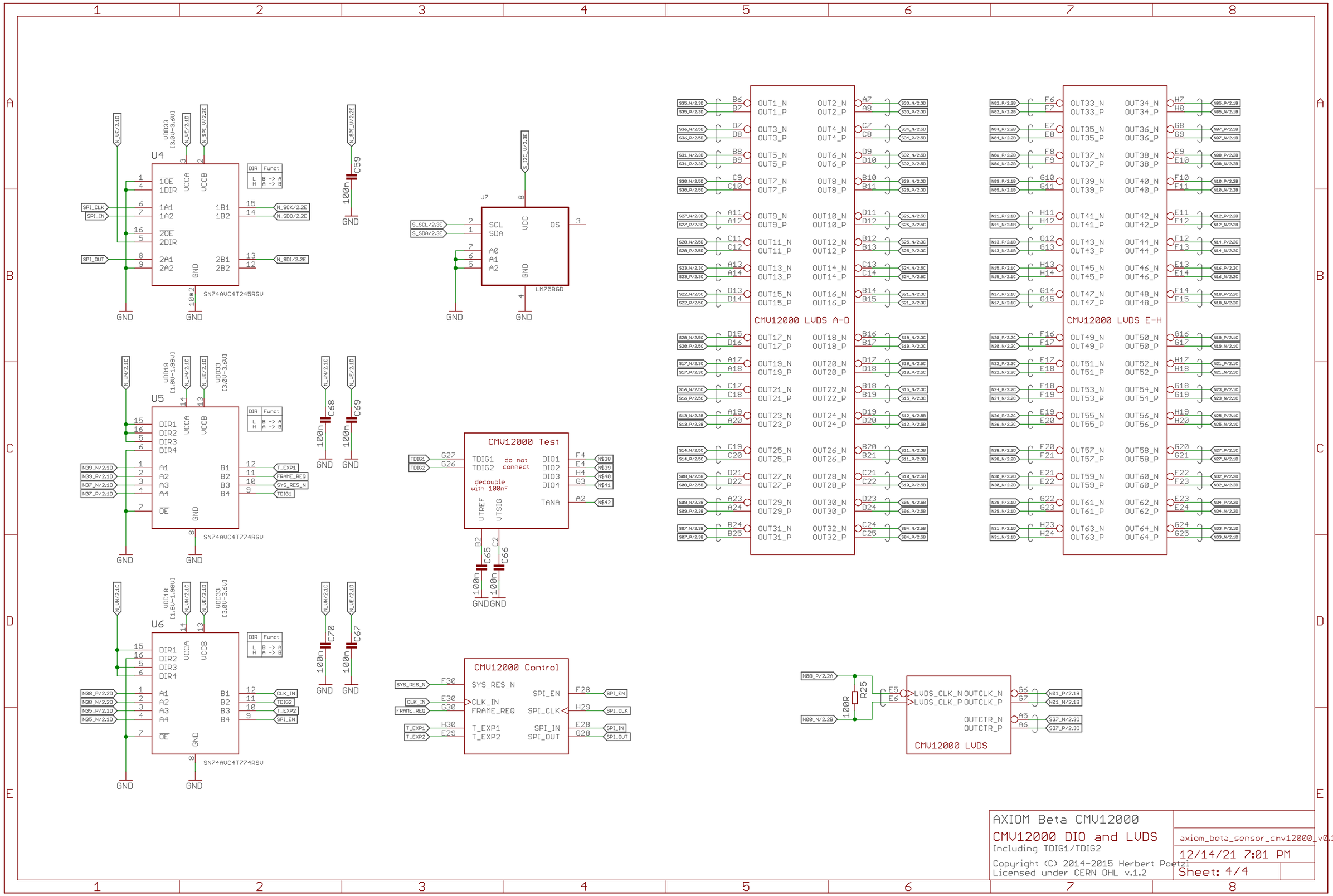
U4
SN74AVC4T245RSV
U5
SN74AVC4T774RSV
U6
SN74AVC4T774RSV
U7
LM75BGD
CMV12000 Test
CMV12000 Control
CMV12000 LVDS A-D
CMV12000 LVDS E-H
CMV12000 LVDS
AXIOM Beta CMV12000
CMV12000 DIO and LVDS
Including TDIG1/TDIG2
Copyright (C) 2014-2015 Herbert Poetzl
Licensed under CERN OHL v.1.2
axiom_beta_sensor_cmv12000_v0.14_tht
12/14/21 7:01 PM
Sheet: 4/4