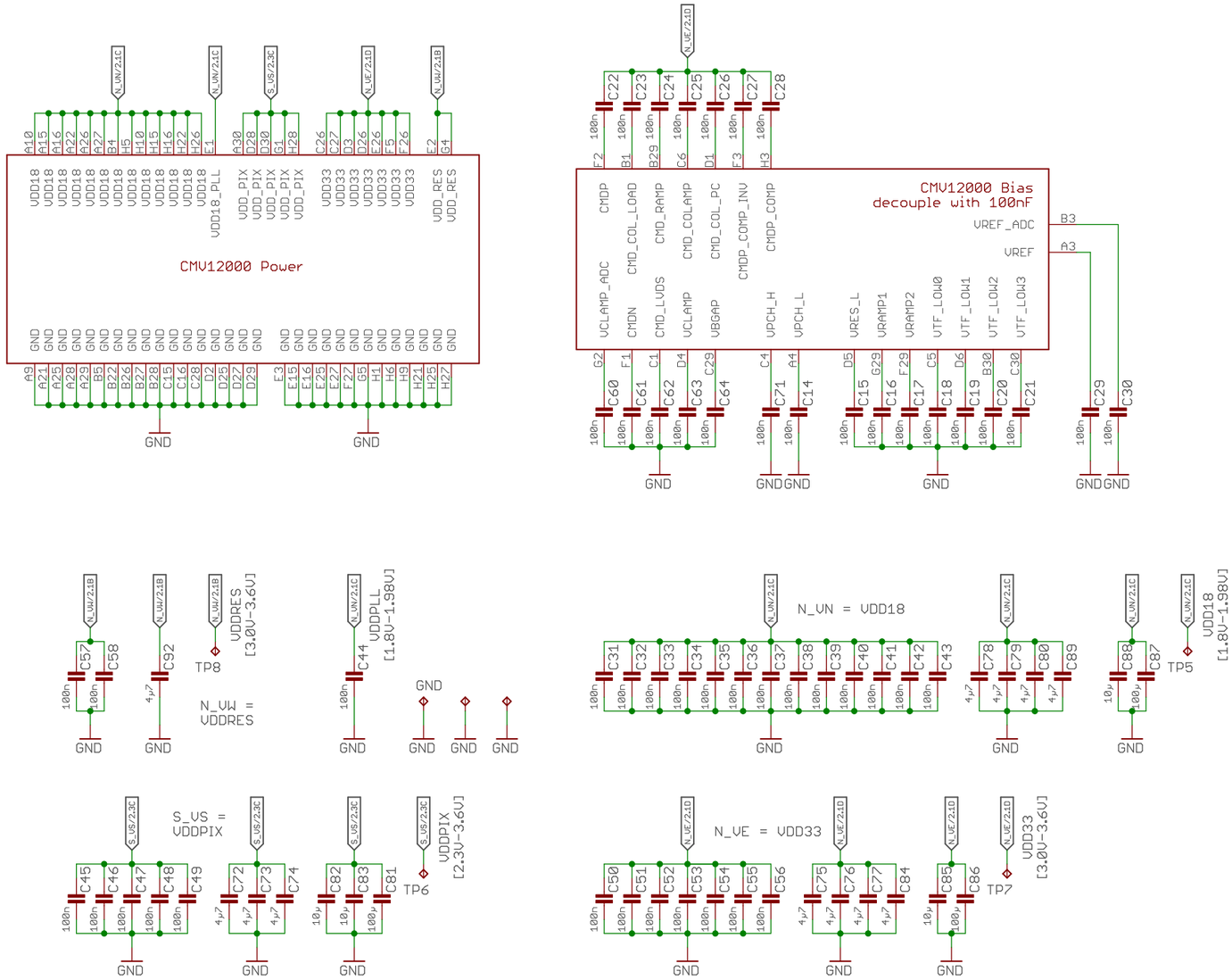

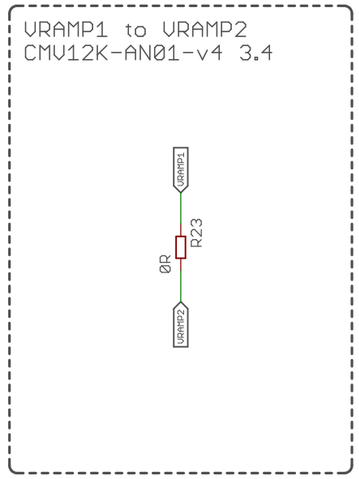

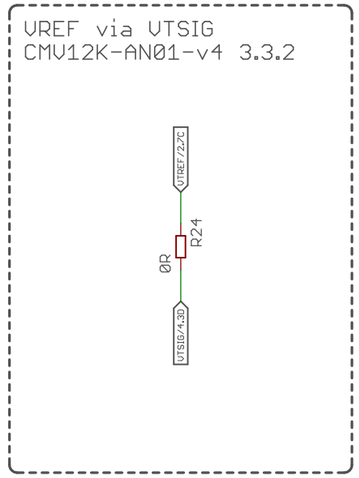

AXIOM Beta CMV12000

Power and Decoupling

4 Voltages

Copyright (C) 2014-2015 H.Poetzl
Licensed under CERN OHL v.1.2

axiom_beta_sensor_cmv12000_thr_v0.16_r1.7c

12/14/21 7:00 PM

Sheet: 1/5

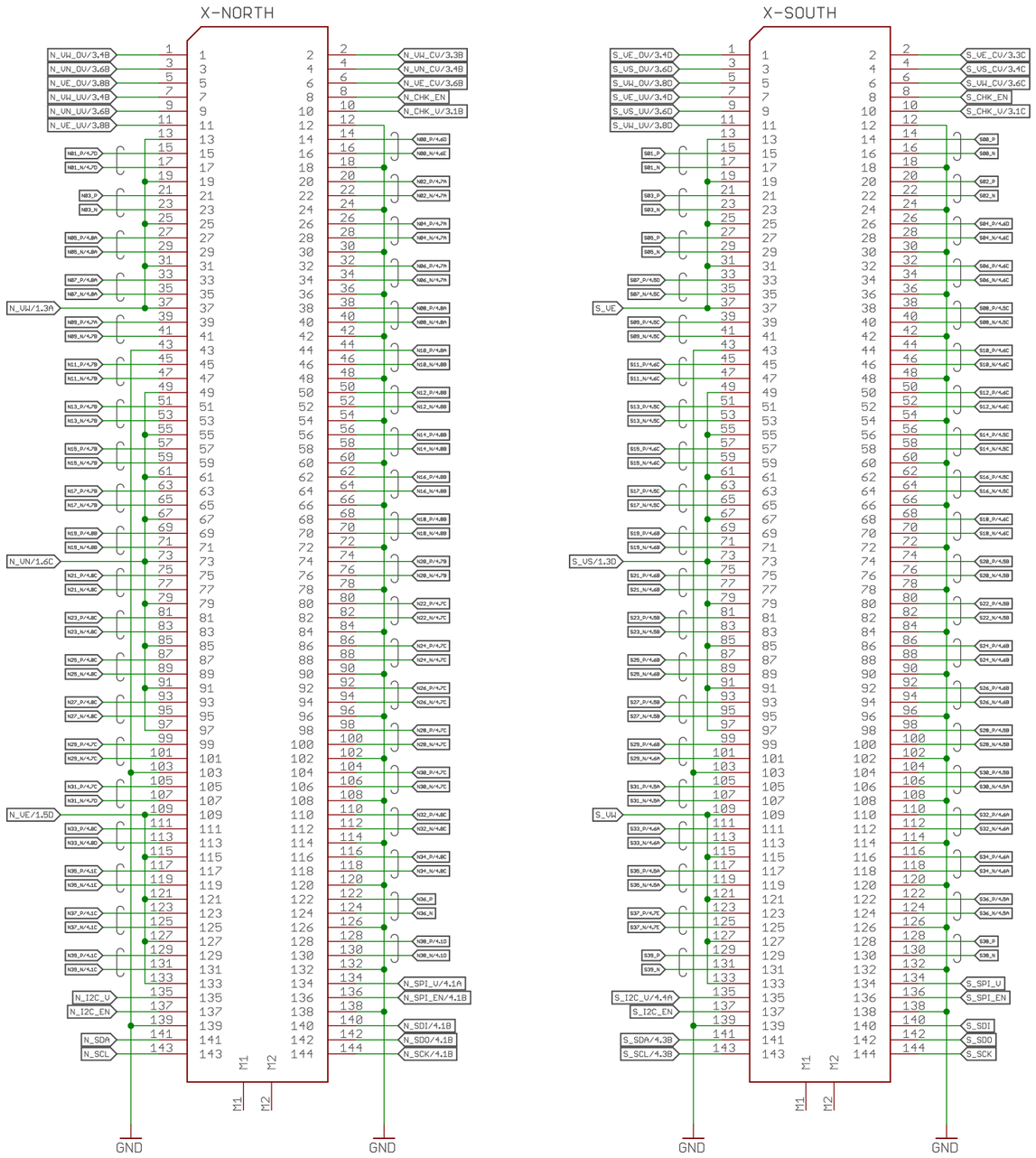

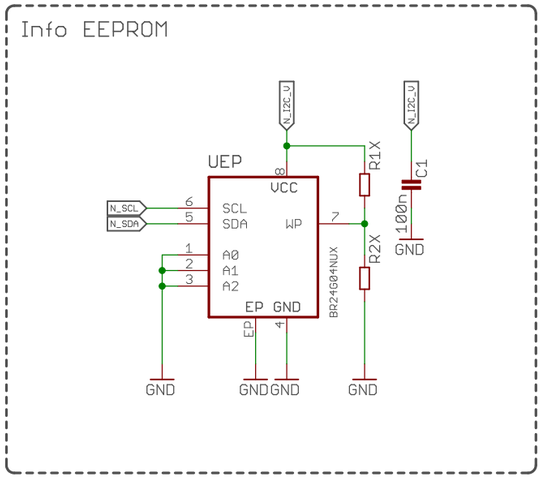

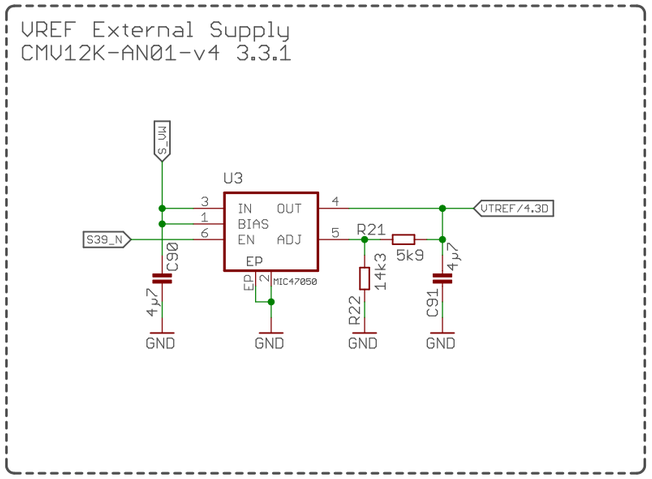

AXIOM Beta CMV12000

Interface, Info and VREF

Optional VREF Supply

Copyright (C) 2014-2015 H.Poetzl
Licensed under CERN OHL v.1.2

axiom_beta_sensor_cmv12000_thr_v0.16_r1.7c

12/14/21 7:00 PM

Sheet: 2/5

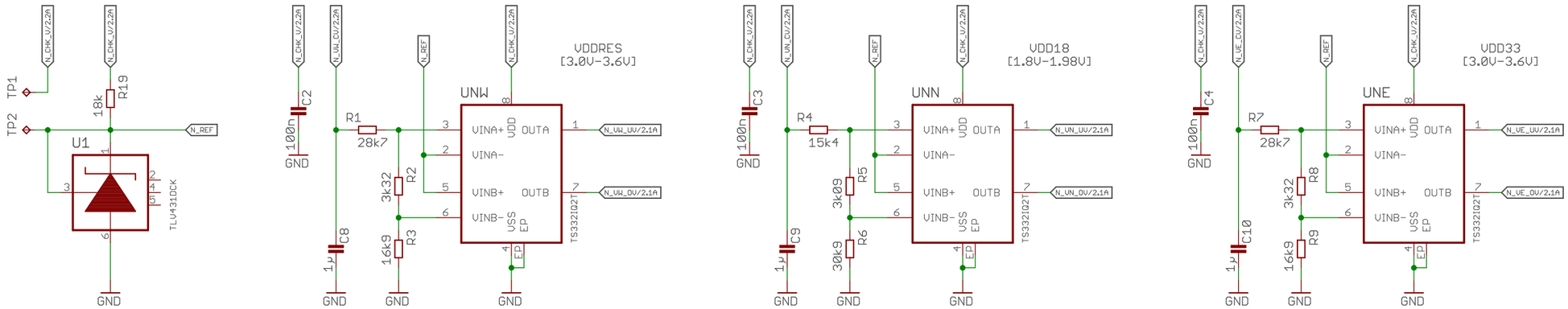

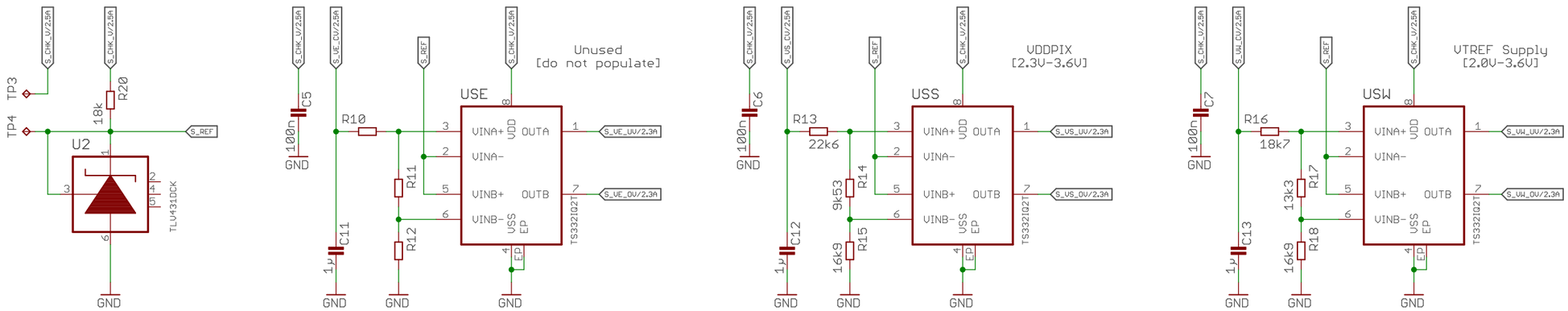

AXIOM Beta CMV12000

Over/Under Voltage Check

4/5 Voltages

axiom_beta_sensor_cmv12000_tht_v0.16_r1.7c

12/14/21 7:00 PM

Sheet: 3/5

Copyright (C) 2014-2020 H.Poetzl
Licensed under CERN OHL v.1.2

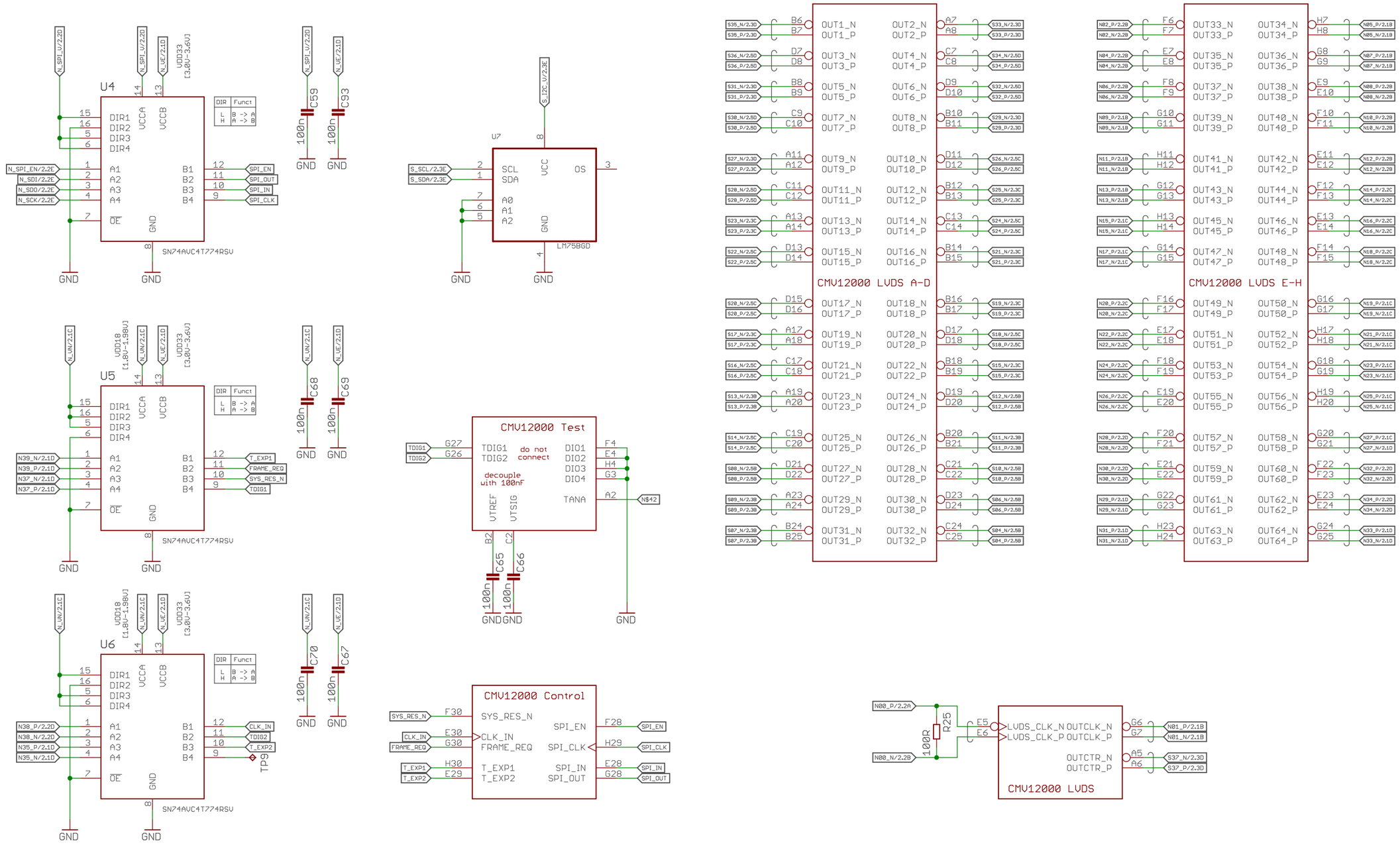

AXIOM Beta CMV12000

CMV12000 DIO and LVDS

Including TDIG1/TDIG2

Copyright (C) 2014-2020 H.Poetzl
Licensed under CERN OHL v.1.2

axiom_beta_sensor_cmv12000_tht_v0.16_r1.7c

12/14/21 7:00 PM

Sheet: 4/5

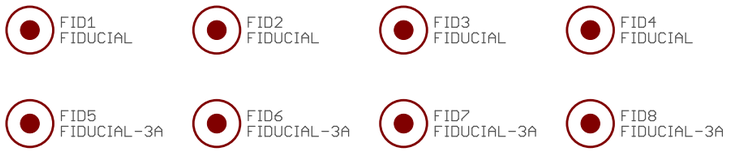

AXIOM Beta CMV12000

Fiducials

Copyright (C) 2014-2020 H.Poetzl
Licensed under CERN OHL v.1.2

axiom_beta_sensor_cmv12000_tht_v0.16_r1.7c

12/14/21 7:00 PM

Sheet: 5/5