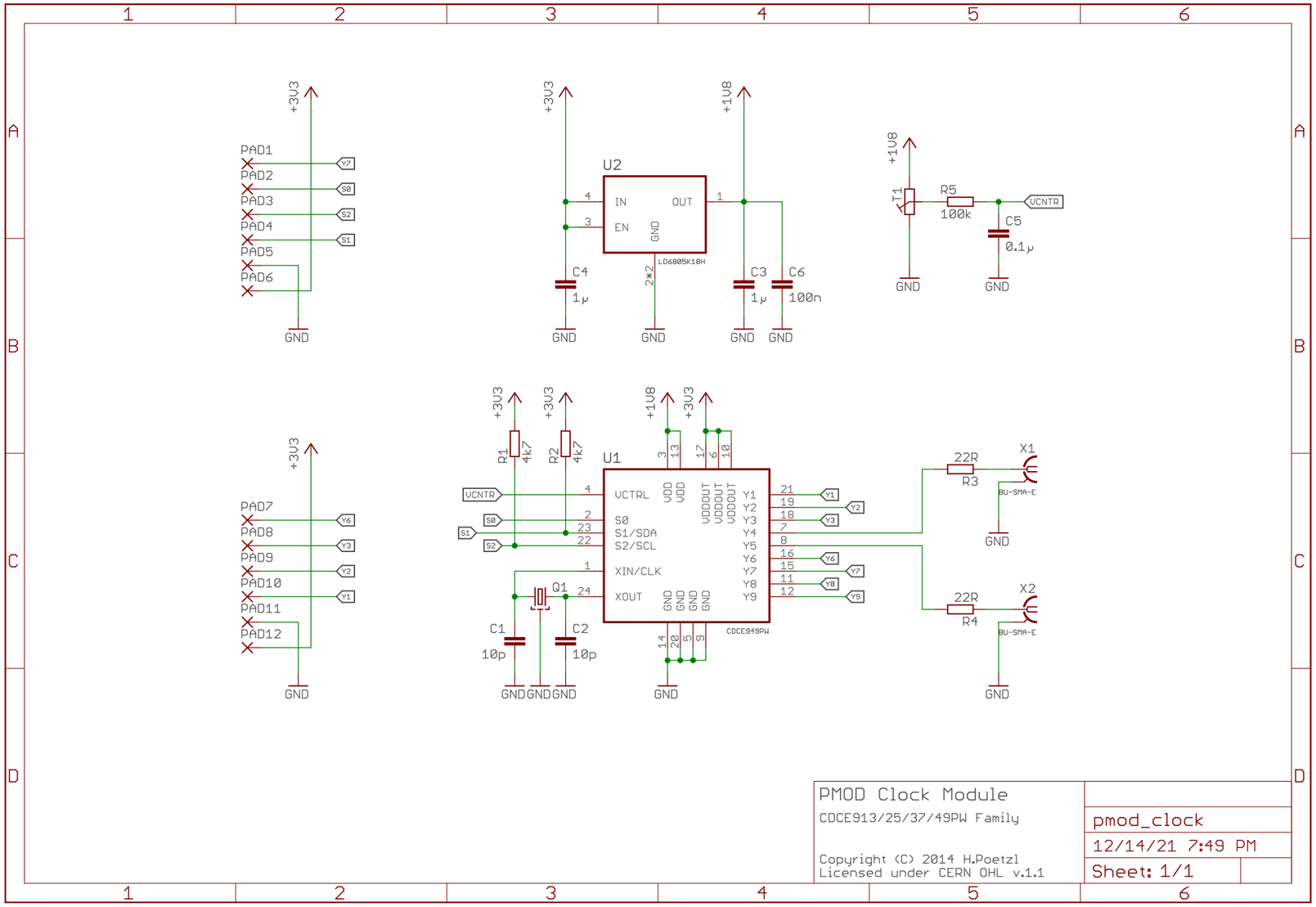

PMOD Clock Module

CDCE913/25/37/49PW Family

Copyright (C) 2014 H.Poetzl
Licensed under CERN OHL v.1.1

pmod_clock

12/14/21 7:49 PM

Sheet: 1/1