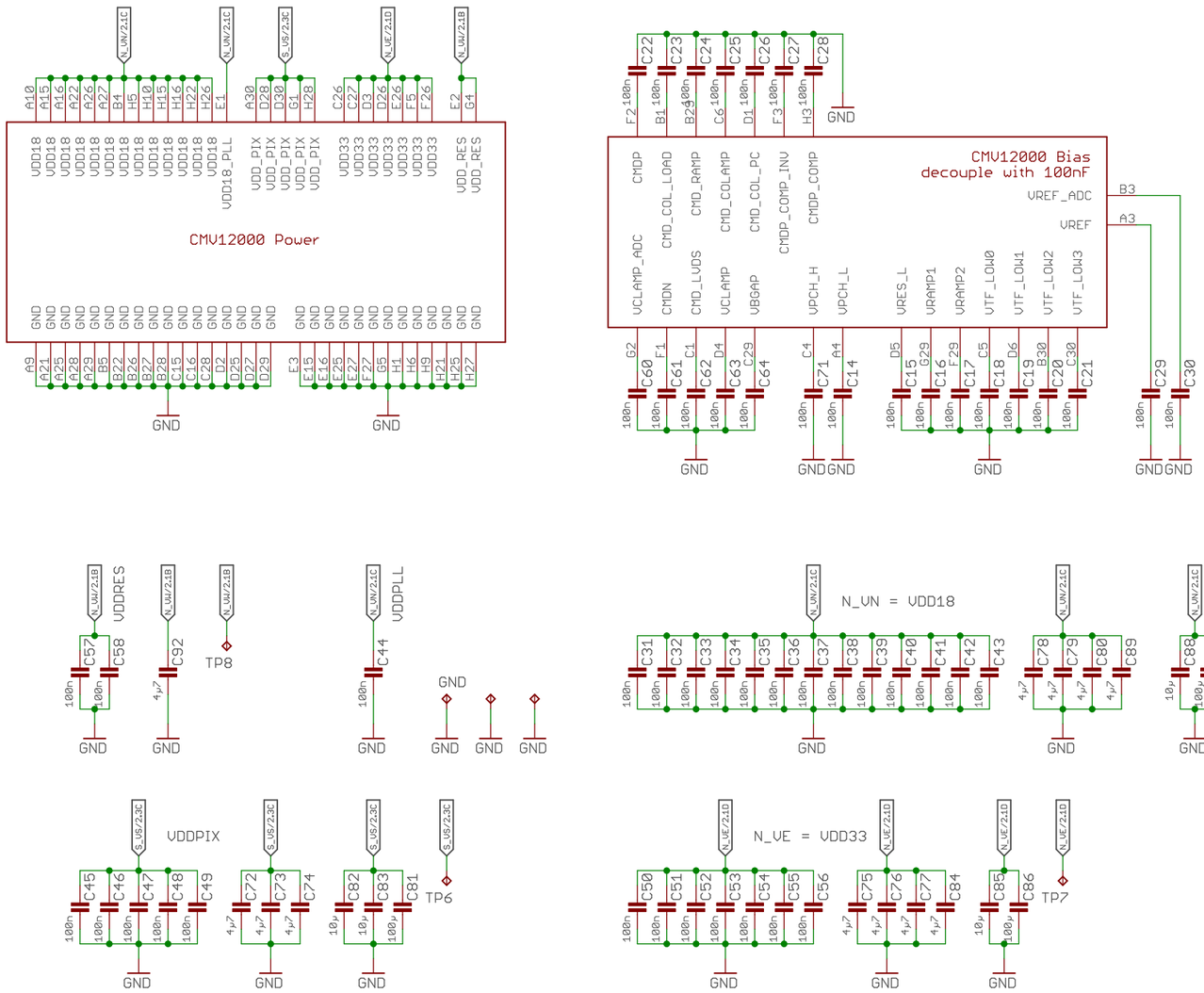

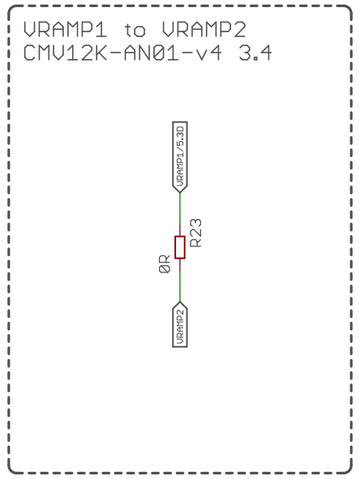

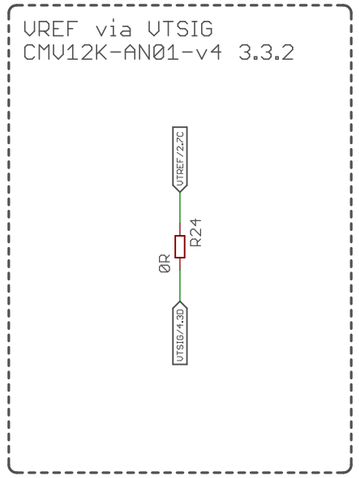

AXIOM Beta CMV12000

Power and Decoupling

4 Voltages

Copyright (C) 2014-2015 Herbert Poetzl
Licensed under CERN OHL v.1.2

axiom_beta_sensor_cmv12000_v0.18_zif

17 Dec 2021 04:00:16

Sheet: 1/5

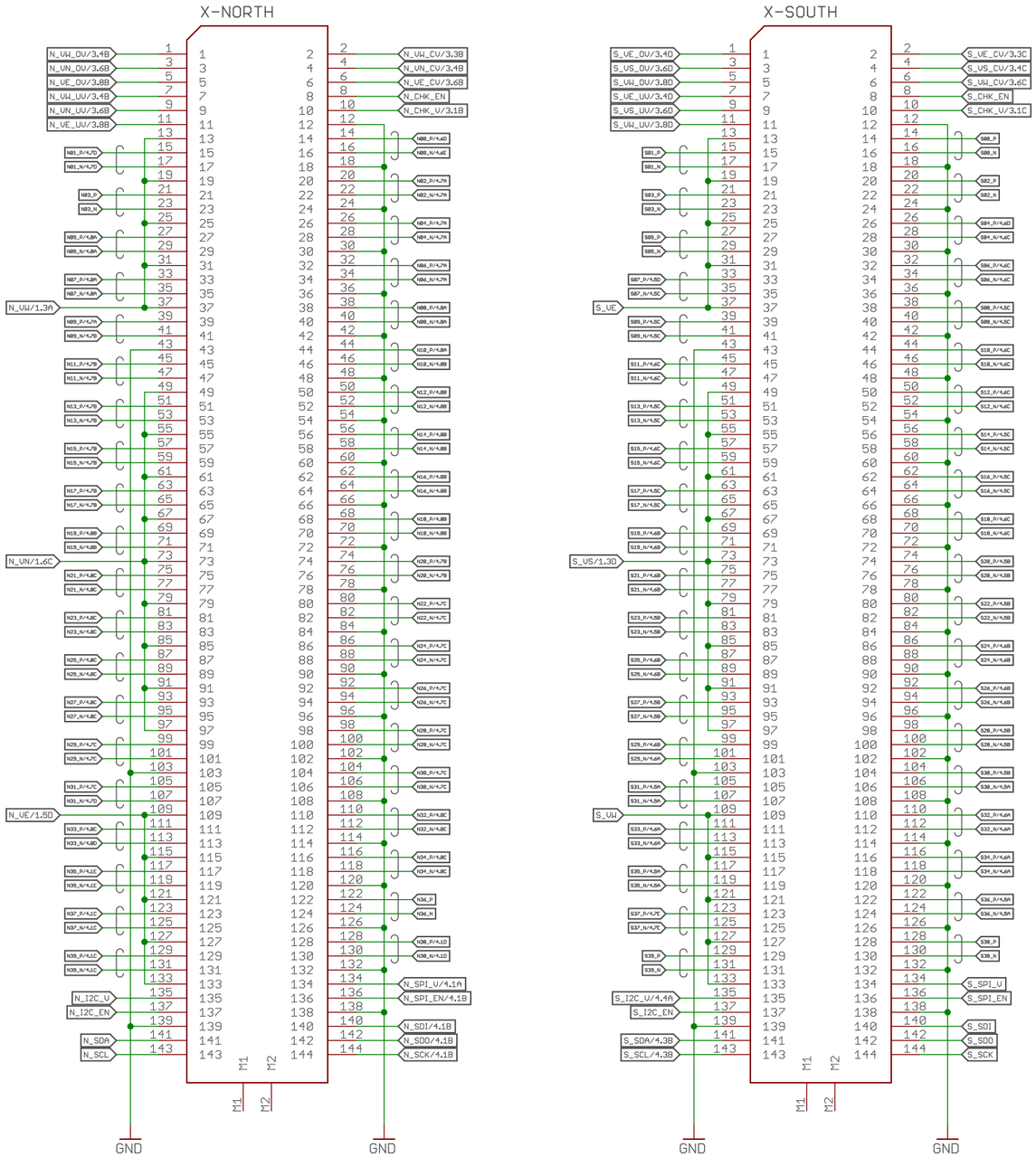

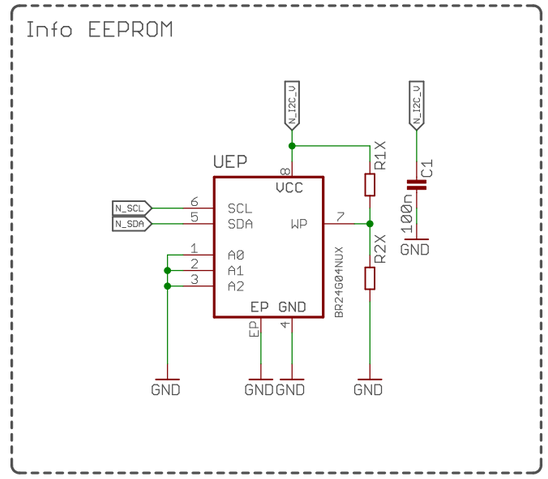

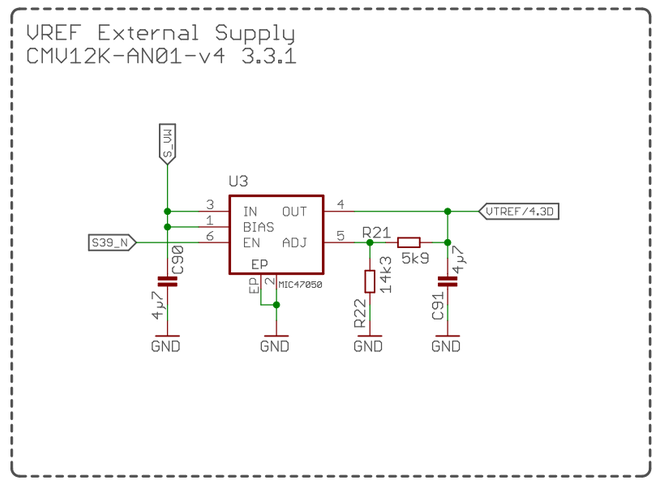

AXIOM Beta CMV12000

Interface, Info and VREF

Optional VREF Supply

Copyright (C) 2014-2015 Herbert Poetzl
Licensed under CERN OHL v.1.2

axiom_beta_sensor_cmv12000_v0.18_zif

17 Dec 2021 04:00:16

Sheet: 2/5

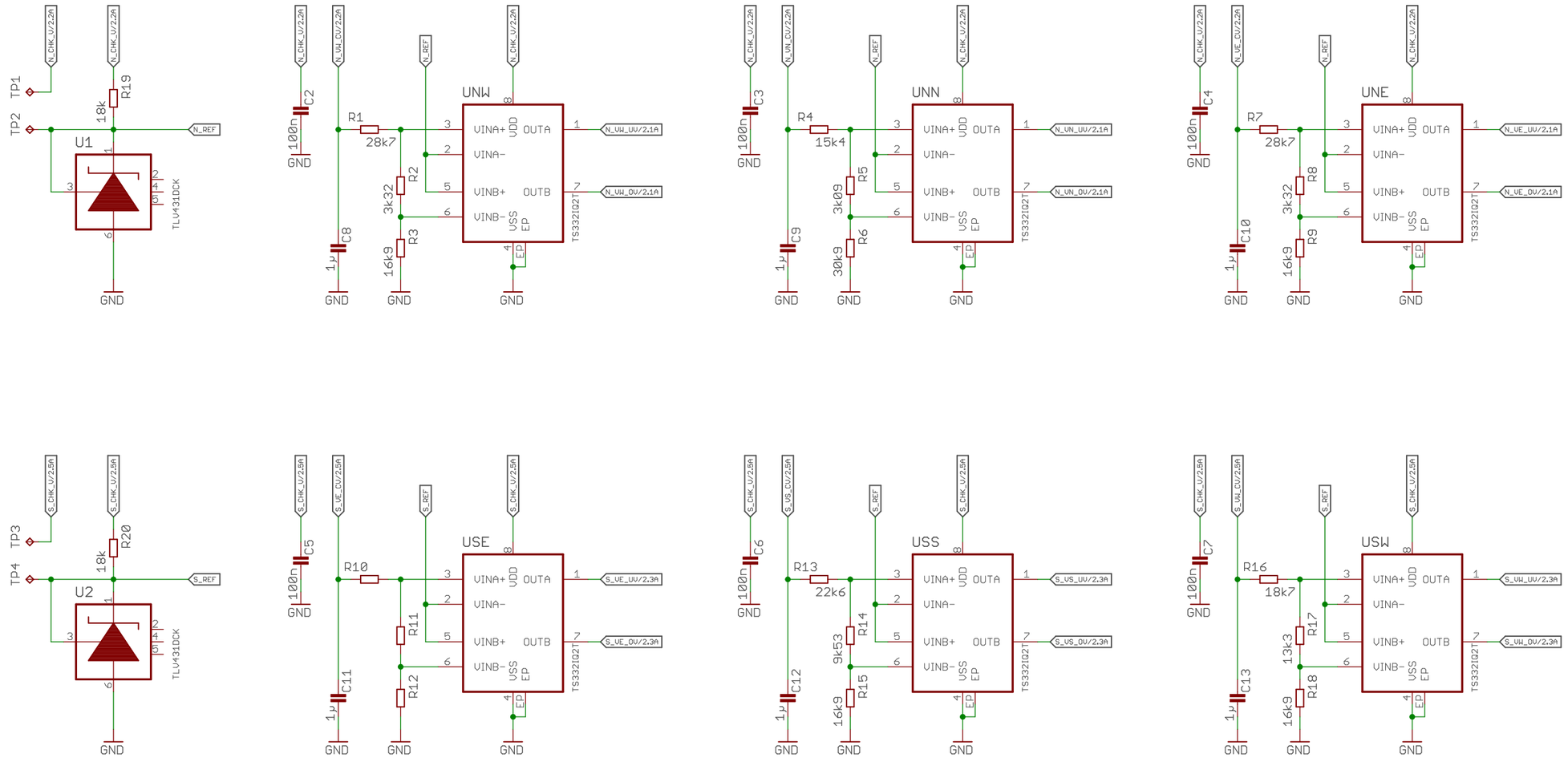

AXIOM Beta CMV12000

Over/Under Voltage Check

4 Voltages

Copyright (C) 2014-2015 Herbert Poetzl
Licensed under CERN OHL v.1.2

axiom_beta_sensor_cmv12000_v0.18_zif

17 Dec 2021 04:00:16

Sheet: 3/5

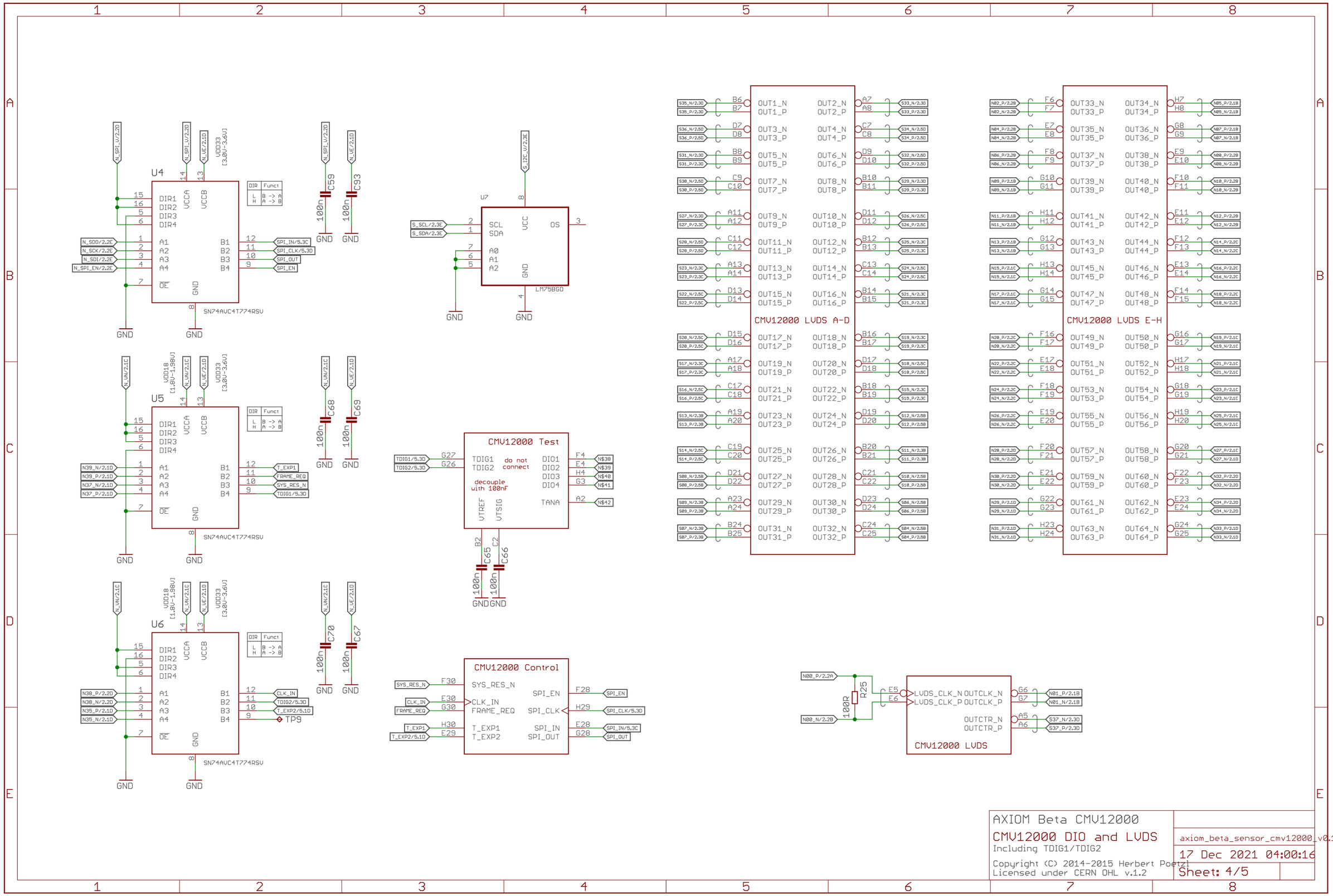

AXIOM Beta CMV12000

CMV12000 DIO and LVDS

Including TDIG1/TDIG2

Copyright (C) 2014-2015 Herbert Poetzl
Licensed under CERN OHL v.1.2

axiom_beta_sensor_cmv12000_v0.18_zif

17 Dec 2021 04:00:16

Sheet: 4/5

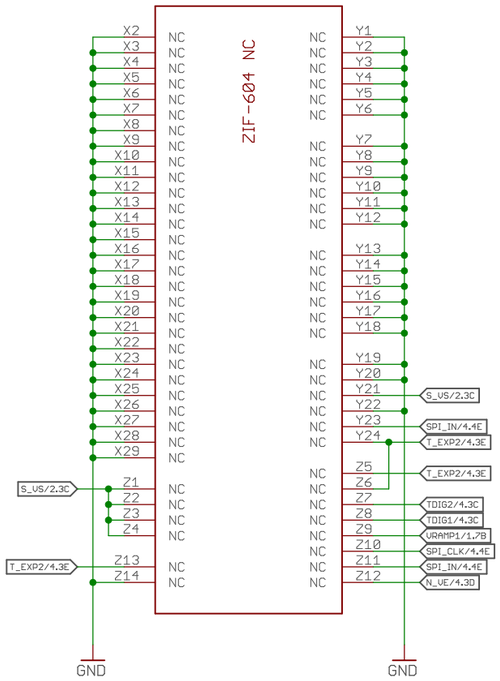

AXIOM Beta CMV12000

ZIF Unused Pins

axiom_beta_sensor_cmv12000_v0.18_zif

17 Dec 2021 04:00:16

Copyright (C) 2014-2015 Herbert Poetzl
Licensed under CERN OHL v.1.2

Sheet: 5/5