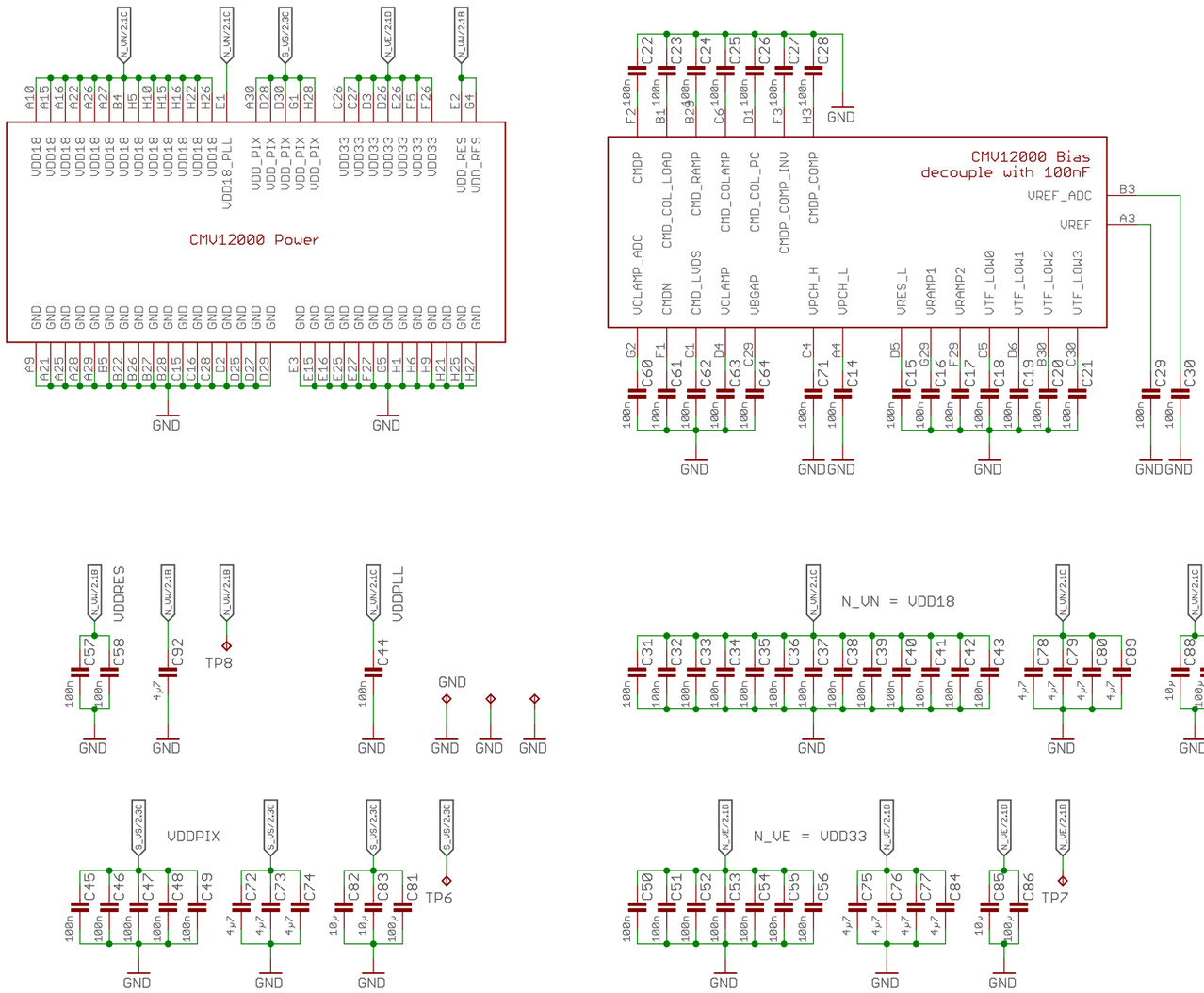

VRAMP1 to VRAMP2
CMV12K-AN01-v4 3.4

VREF via VTSIG
CMV12K-AN01-v4 3.3.2

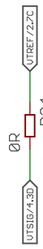

AXIOM Beta CMV12000

Power and Decoupling

4 Voltages

Copyright (C) 2014 Herbert Poetzl
Licensed under CERN OHL v.1.2

axiom_beta_sensor_cmv12000_v0.13_zif

17 Dec 2021 03:56:48

Sheet: 1/5

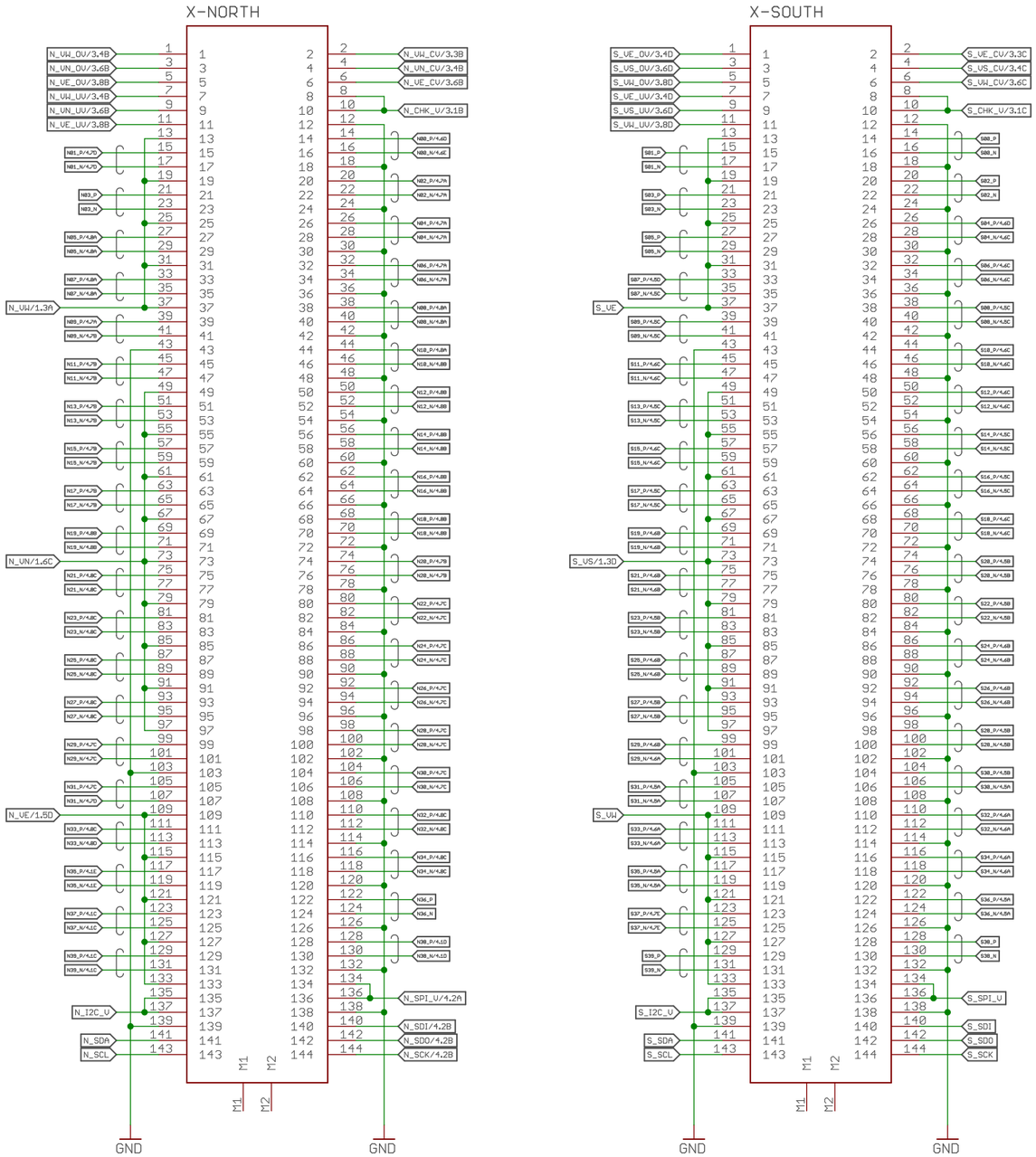

Info EEPROM

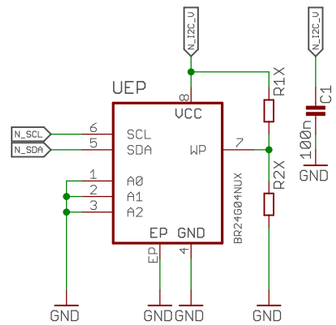

VREF External Supply
CMV12K-AN01-v4 3.3.1

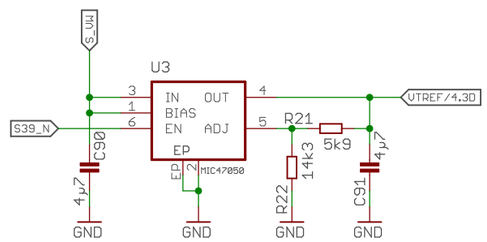

AXIOM Beta CMV12000

Interface, Info and VREF

Optional VREF Supply

Copyright (C) 2014 Herbert Poetzl
Licensed under CERN OHL v.1.2

axiom_beta_sensor_cmv12000_v0.13_zif

17 Dec 2021 03:56:48

Sheet: 2/5

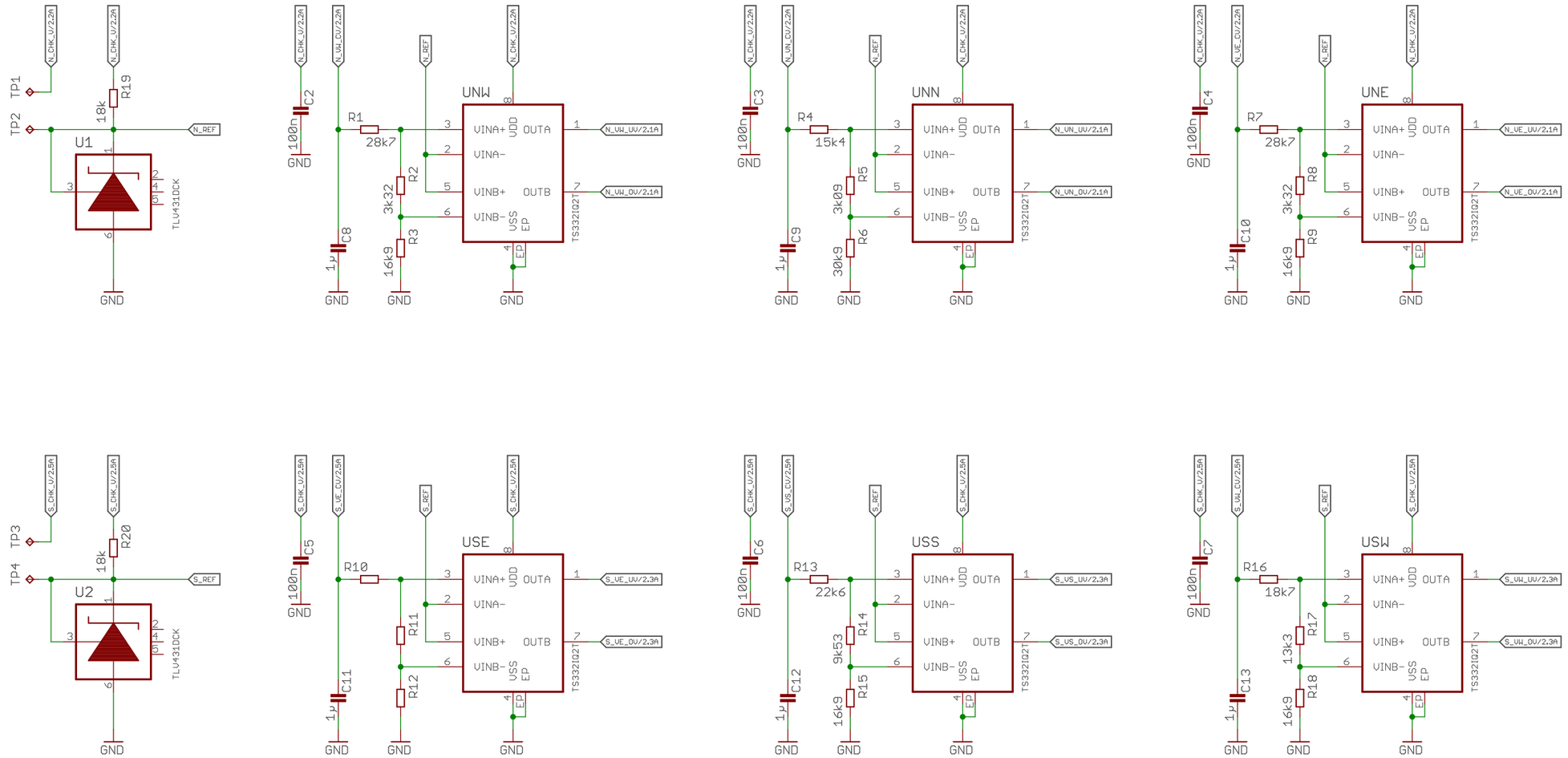

AXIOM Beta CMV12000

Over/Under Voltage Check

4 Voltages

Copyright (C) 2014 Herbert Poetzl
Licensed under CERN OHL v.1.2

axiom_beta_sensor_cmv12000_v0.13_zif

17 Dec 2021 03:56:48

Sheet: 3/5

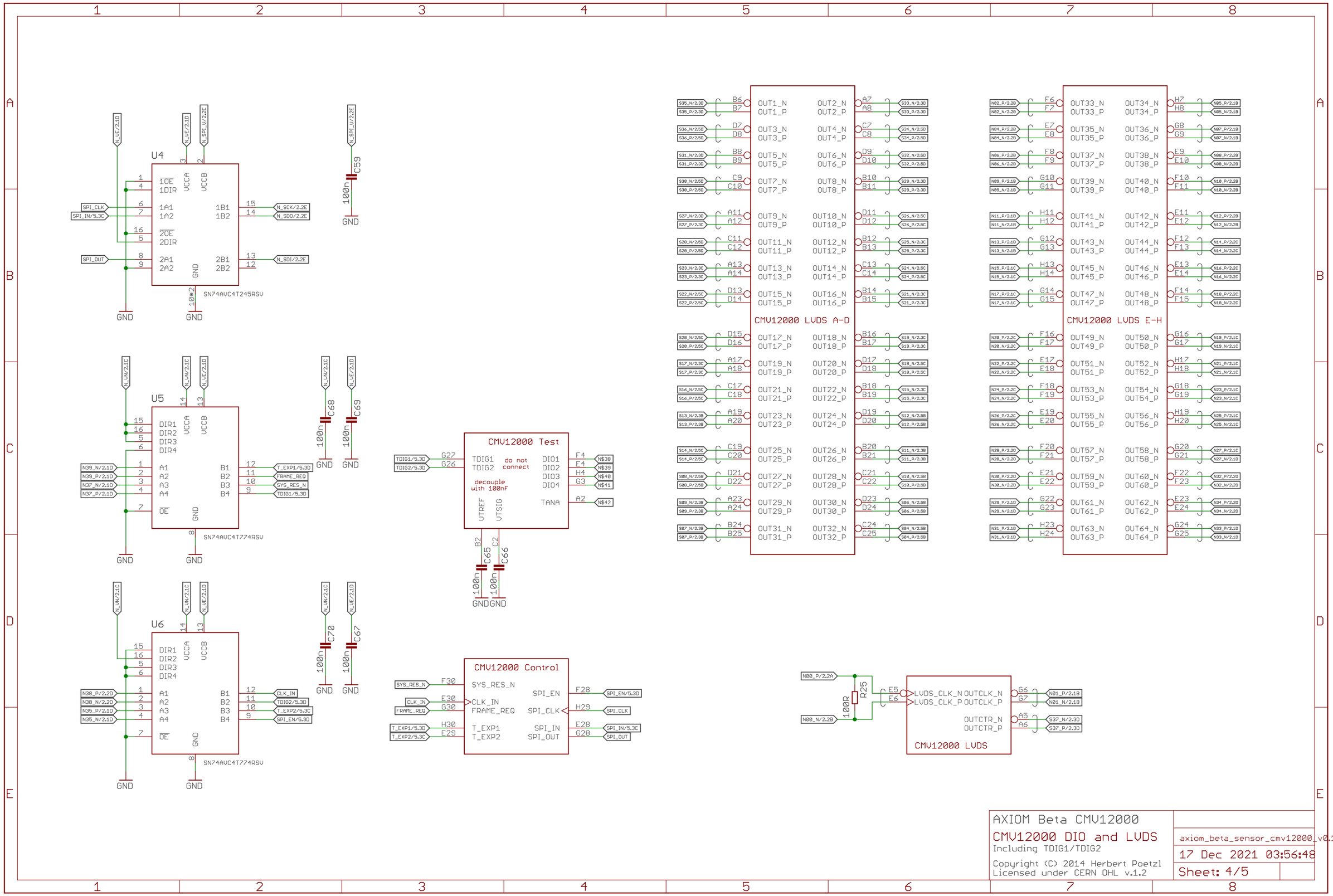
U4
SN74AVC4T245RSV
U5
SN74AVC4T774RSV
U6
SN74AVC4T774RSV
CMV12000 Test
CMV12000 Control
CMV12000 LVDS A-D
CMV12000 LVDS E-H
CMV12000 LVDS
R25
100R
GND
AXIOM Beta CMV12000
CMV12000 DIO and LVDS
Including TDIG1/TDIG2
Copyright (C) 2014 Herbert Poetzl
Licensed under CERN OHL v.1.2
axiom_beta_sensor_cmv12000_v0.13_zif
17 Dec 2021 03:56:48
Sheet: 4/5

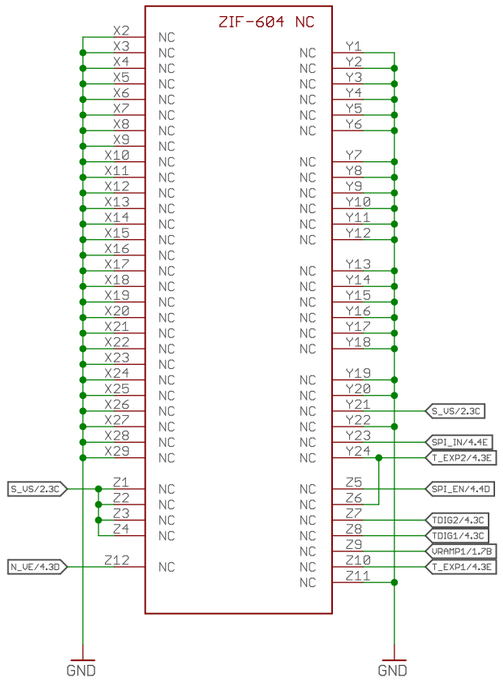

AXIOM Beta CMV12000

CMV12000 DIO and LVDS

Including TDIG1/TDIG2

Copyright (C) 2014 Herbert Poetzl
Licensed under CERN OHL v.1.2

axiom_beta_sensor_cmv12000_v0.13_zif

17 Dec 2021 03:56:48

Sheet: 5/5