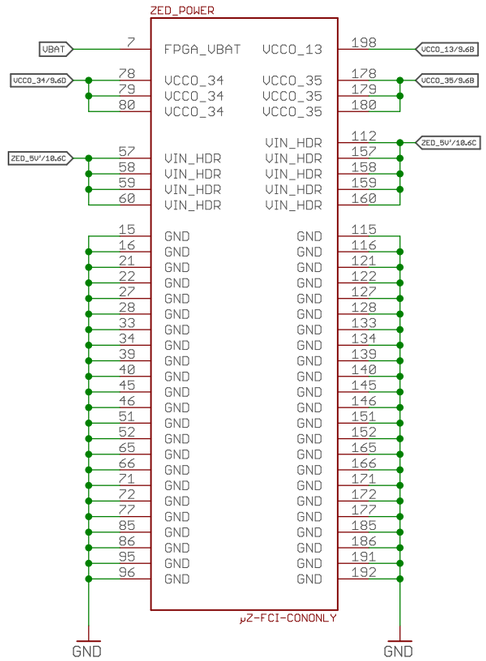

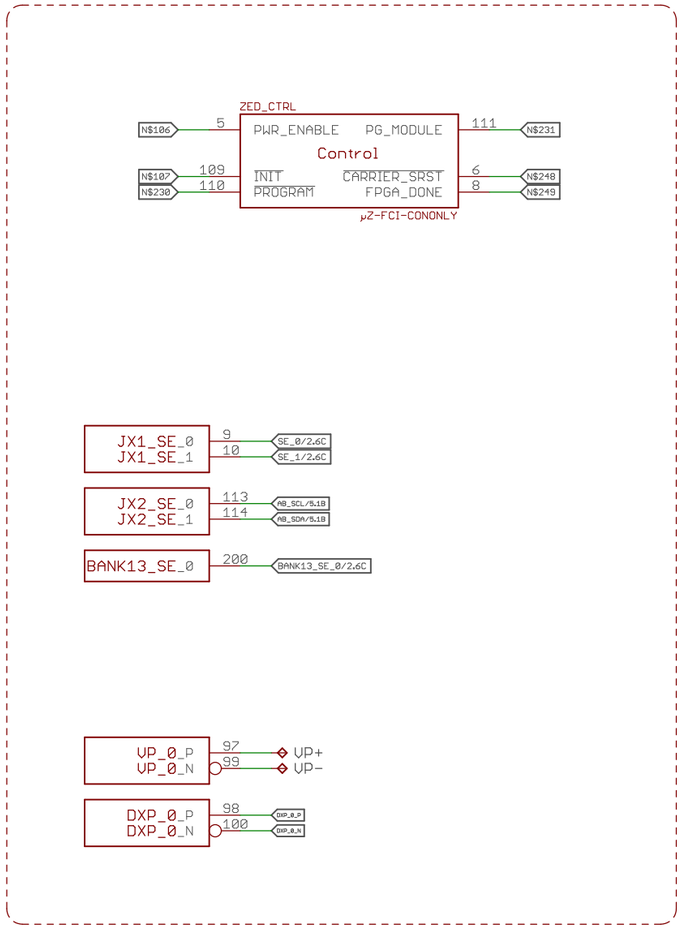

AXIOM Beta Test

MicroZed Power

axiom_beta_power_board_v0.27

not saved!

Copyright (C) 2014-2015 H.Poetzl
Licensed under CERN OHL v.1.2

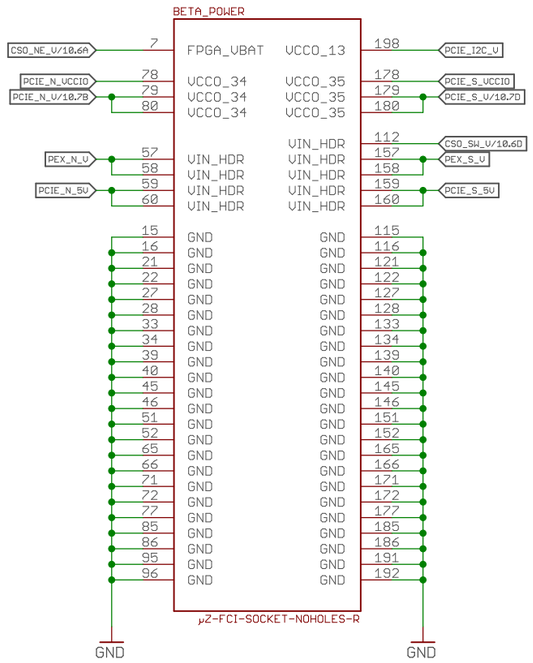

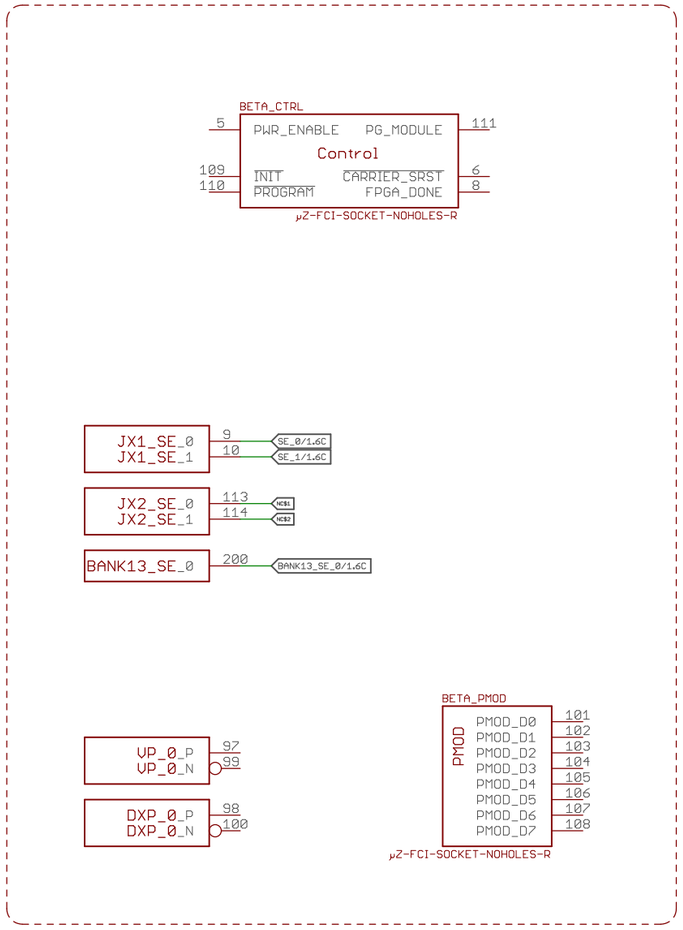

AXIOM Beta Test

Beta Main Board Power

axiom_beta_power_board_v0.27

not saved!

Copyright (C) 2014-2015 H.Poetzl
Licensed under CERN OHL v.1.2

Sheet: 2/10

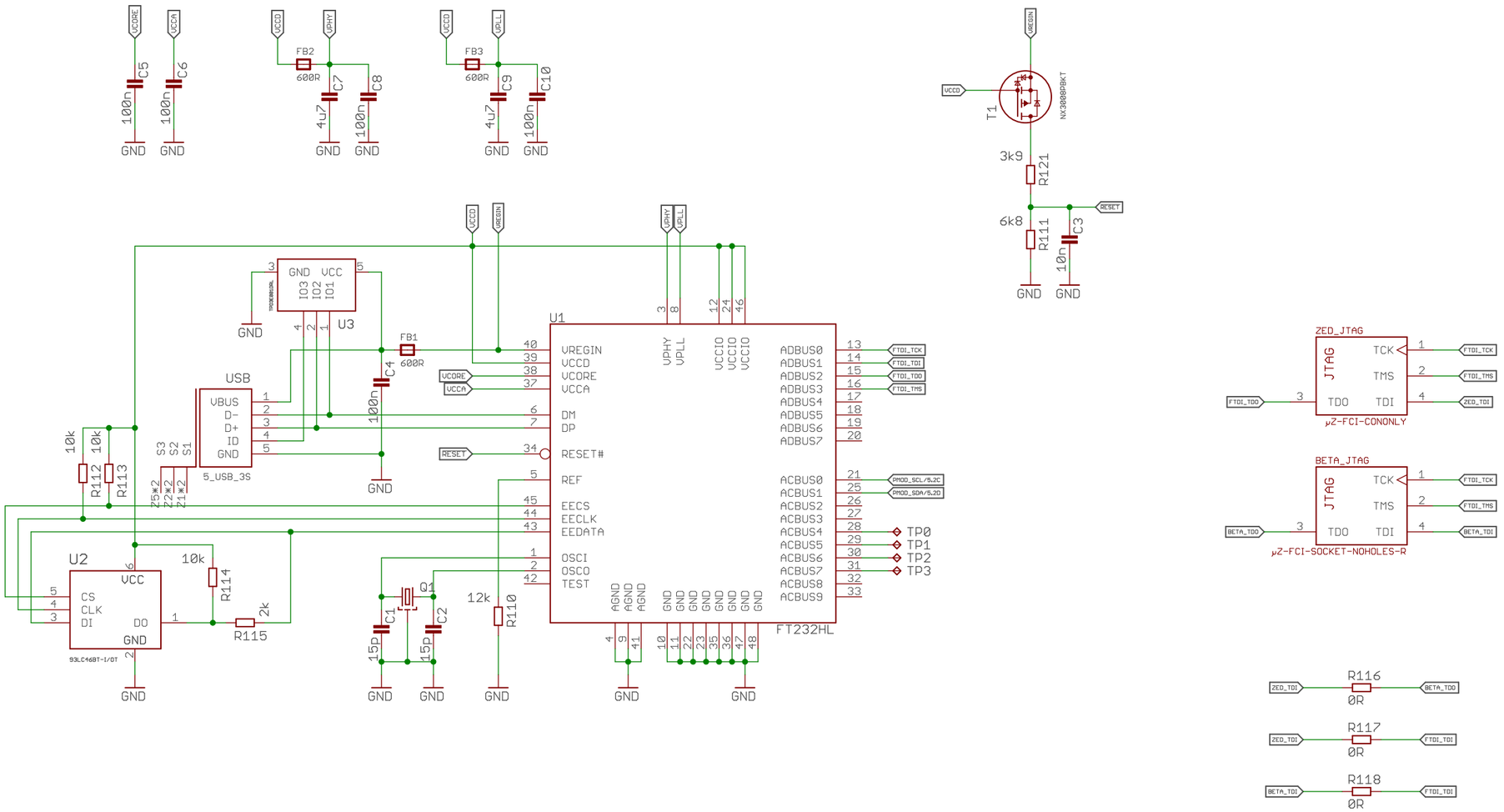

AXIOM Beta Test

FTDI Debug Interface

axiom_beta_power_board_v0.27

not saved!

Sheet: 3/10

Copyright (C) 2014-2015 H.Poetzl
Licensed under CERN OHL v.1.2

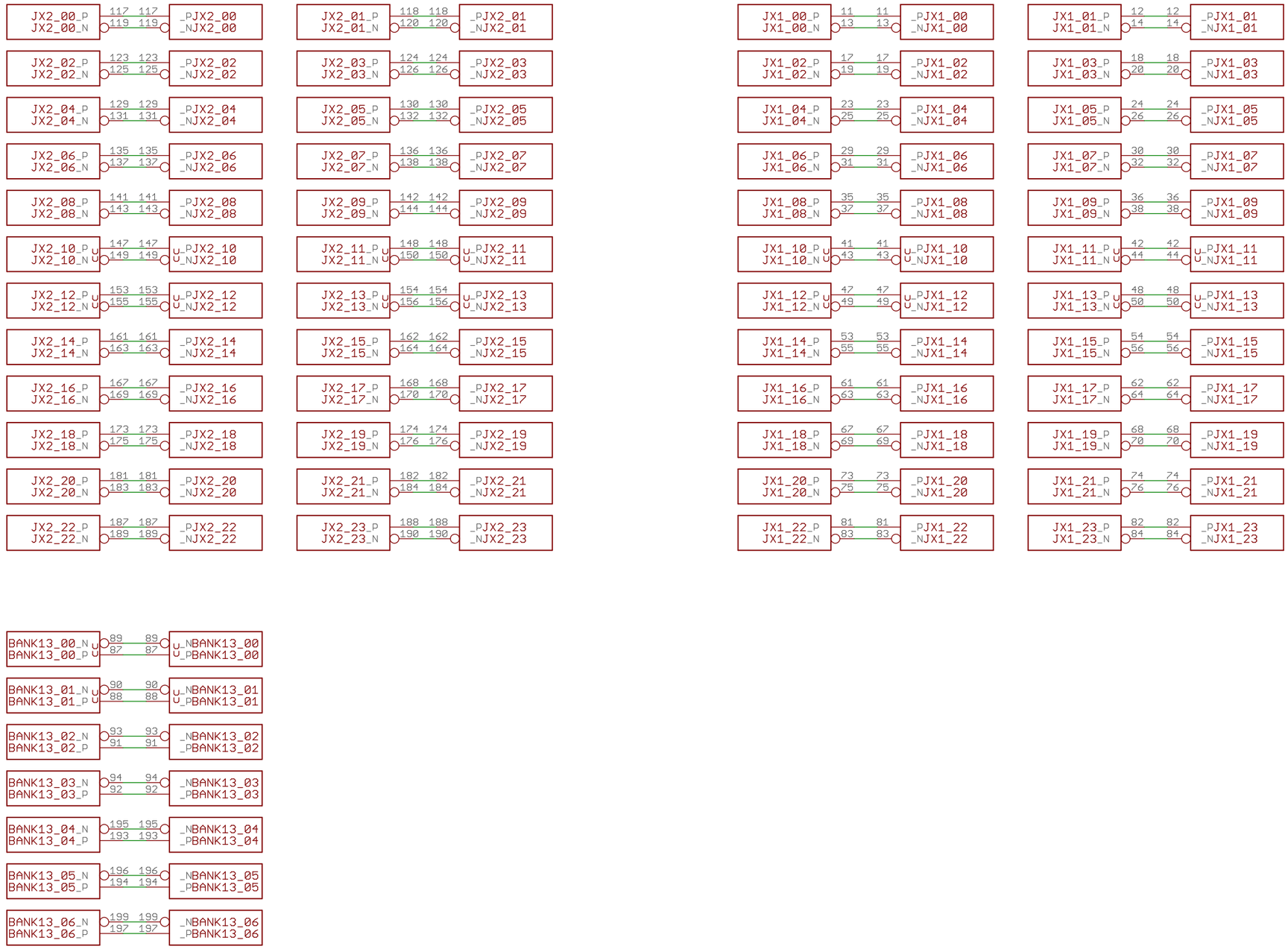

AXIOM Beta Test

LVDS Passthrough

axiom_beta_power_board_v0.27

Copyright (C) 2015 H.Poetzl
Licensed under CERN OHL v.1.2

not saved!

Sheet: 4/10

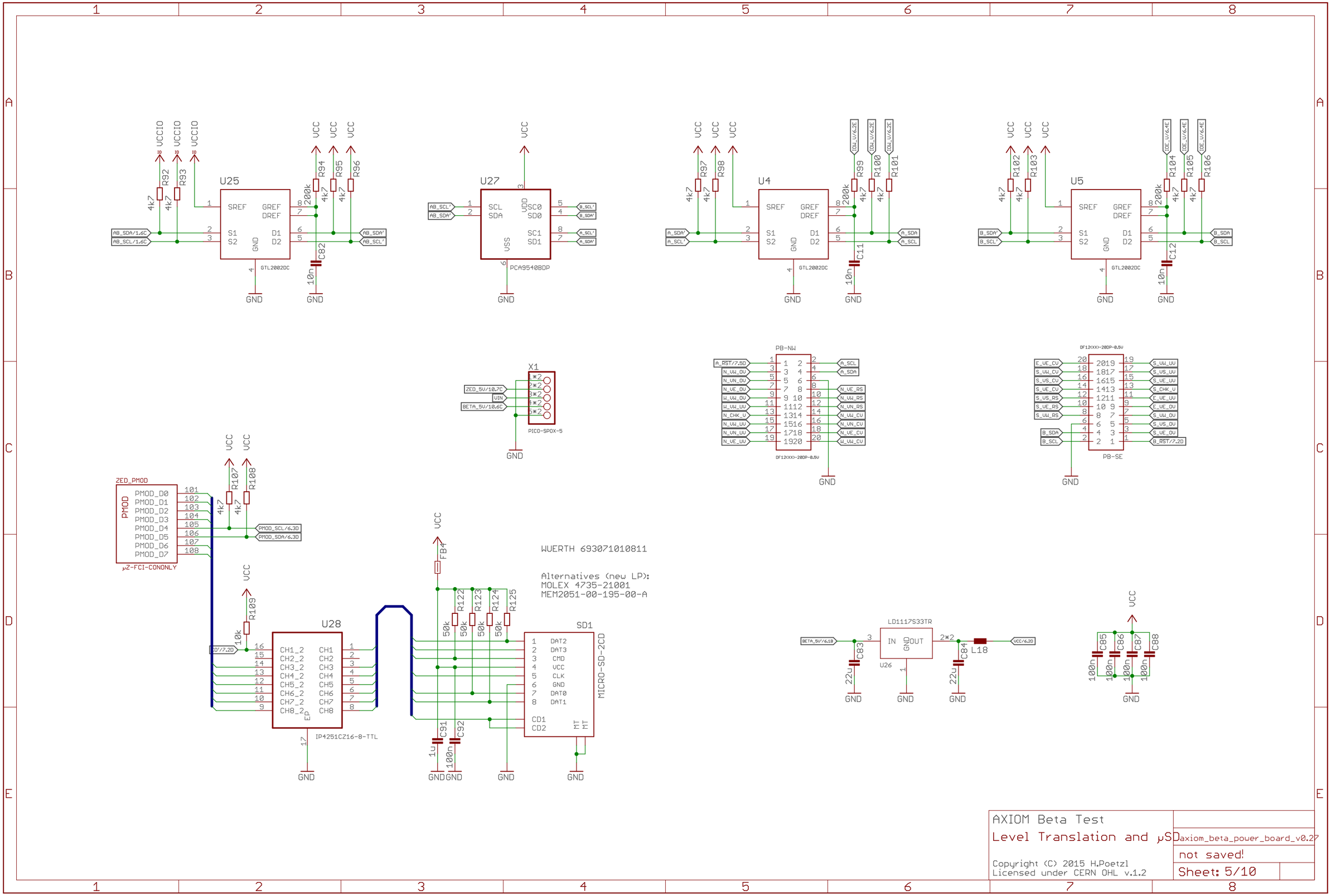

AXIOM Beta Test

Level Translation and µSD

axiom_beta_power_board_v0.27

not saved!

Sheet: 5/10

Copyright (C) 2015 H.Poetzl
Licensed under CERN OHL v.1.2

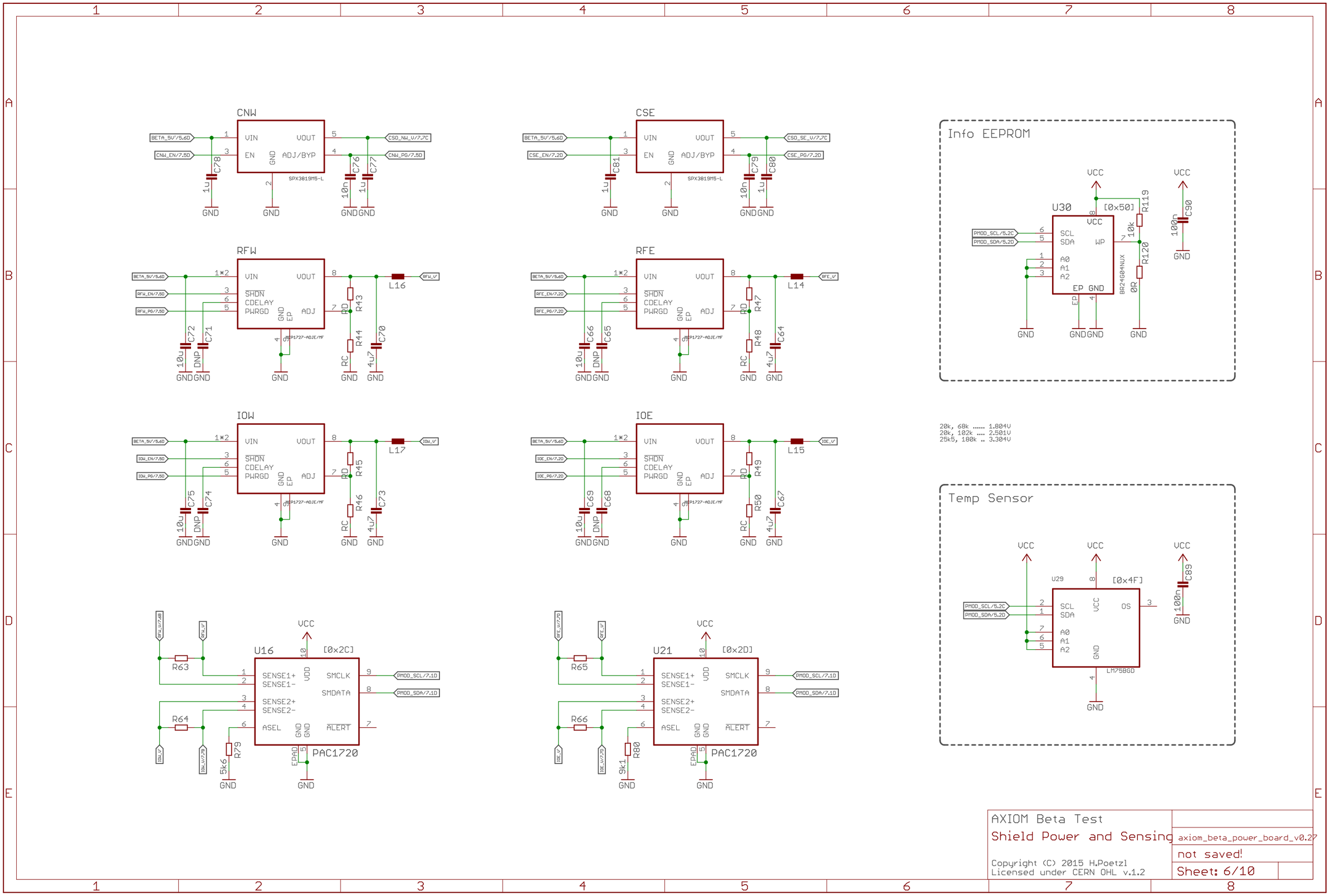

AXIOM Beta Test

Shield Power and Sensing

axiom_beta_power_board_v0.27

not saved!

Sheet: 6/10

Copyright (C) 2015 H.Poetzl
Licensed under CERN OHL v.1.2

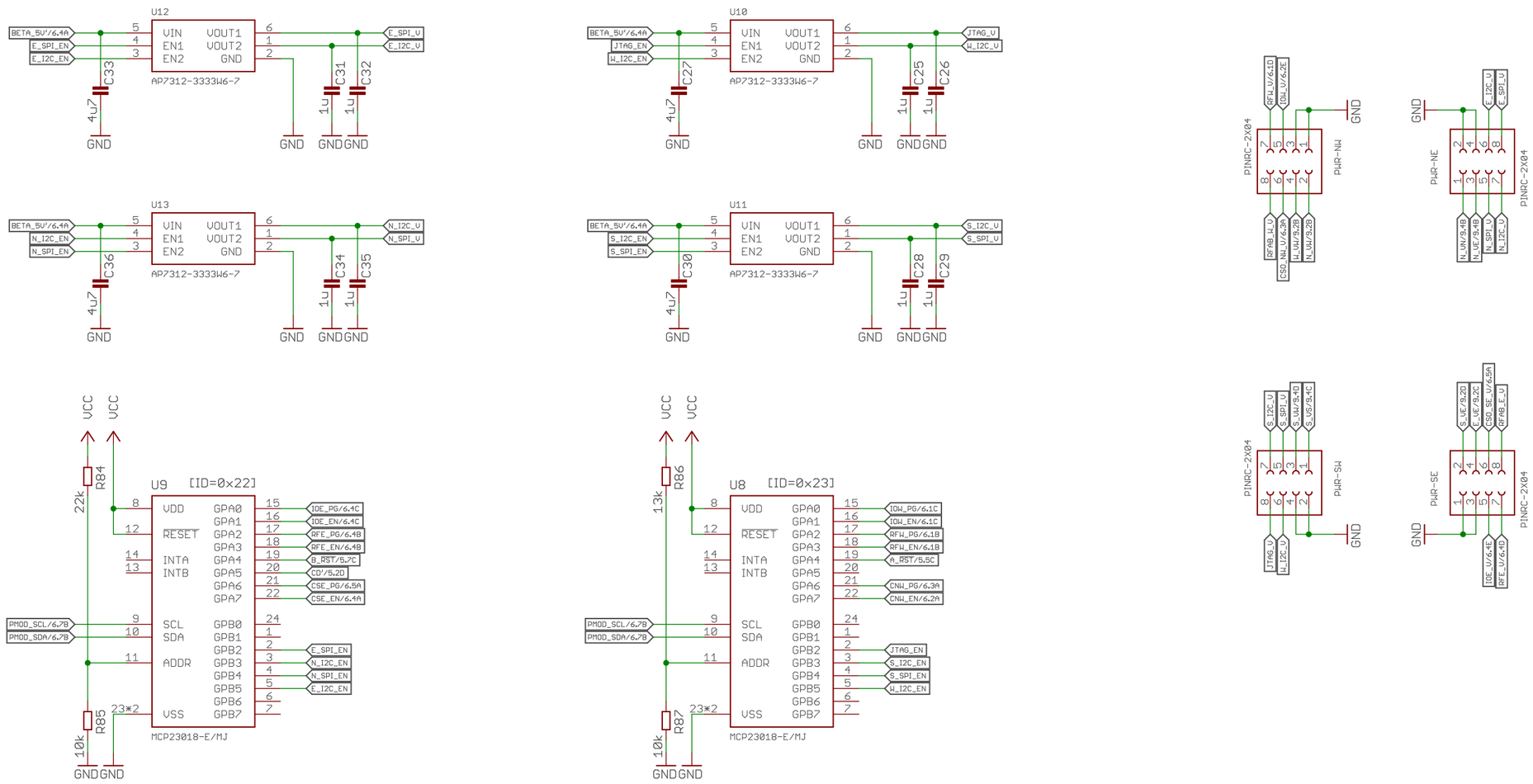

AXIOM Beta Test

Interface Power and Control

axiom_beta_power_board_v0.27

not saved!

Sheet: 7/10

Copyright (C) 2015 H.Poetzl
Licensed under CERN OHL v.1.2

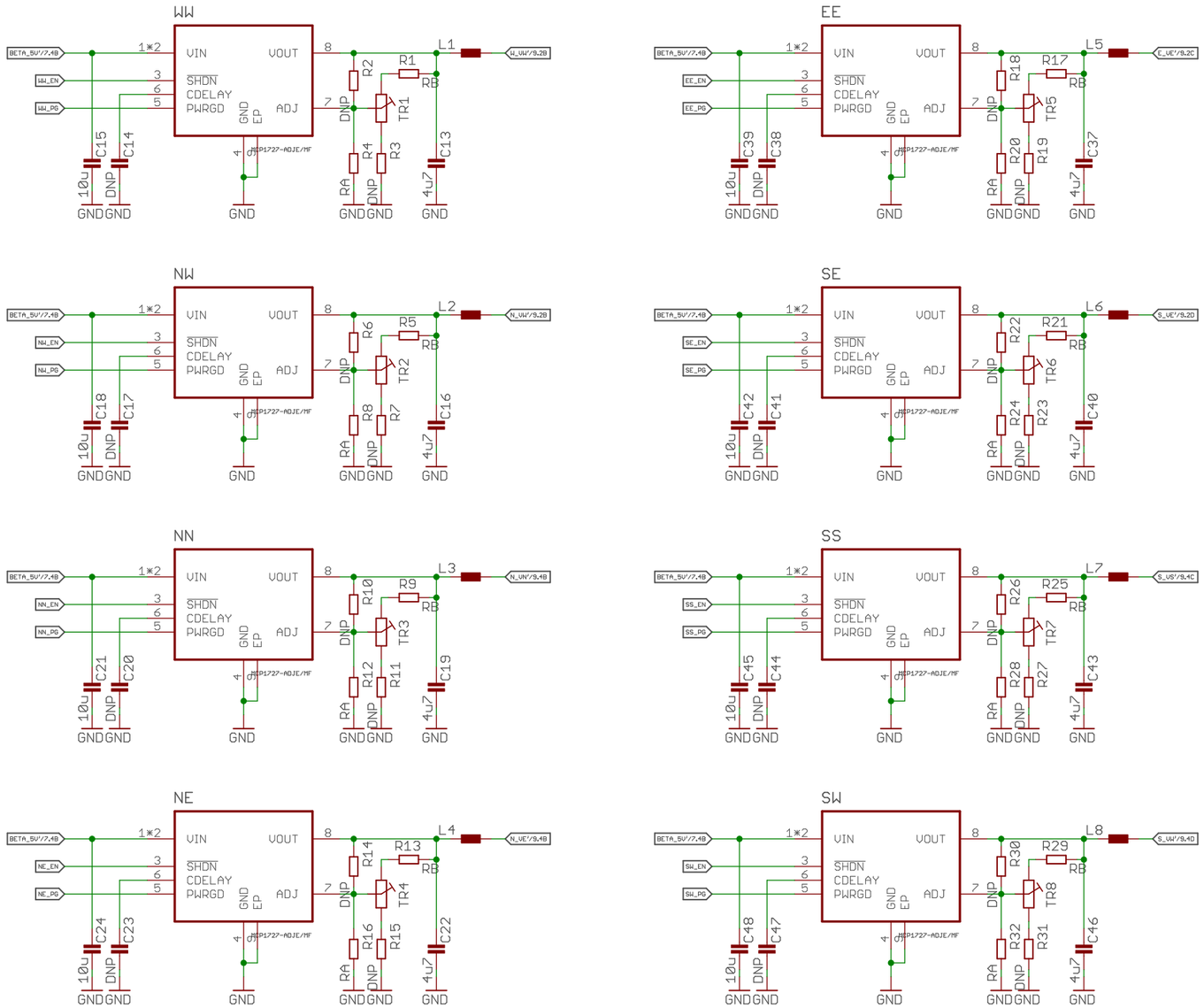

Optional remote sensing

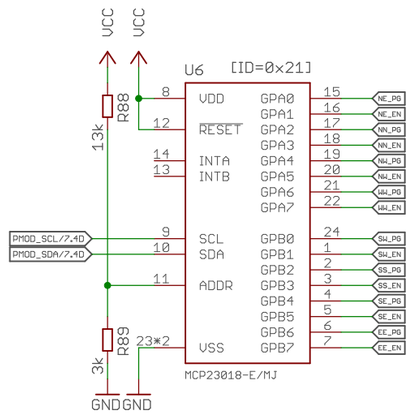

18k, 100k, 43k ..... 1.389V - 3.667V
20k, 100k, 62k ..... 1.681V - 3.731V
20k5, 100k, 68k .... 1.770V - 3.770V
13k, 75k, 30k9 ..... 1.385V - 3.750V
12k4, 75k, 30k ..... 1.402V - 3.882V

AXIOM Beta Test

Sensor Power and Control

axiom_beta_power_board_v0.27

not saved!

Sheet: 8/10

Copyright (C) 2015 H.Poetzl
Licensed under CERN OHL v.1.2

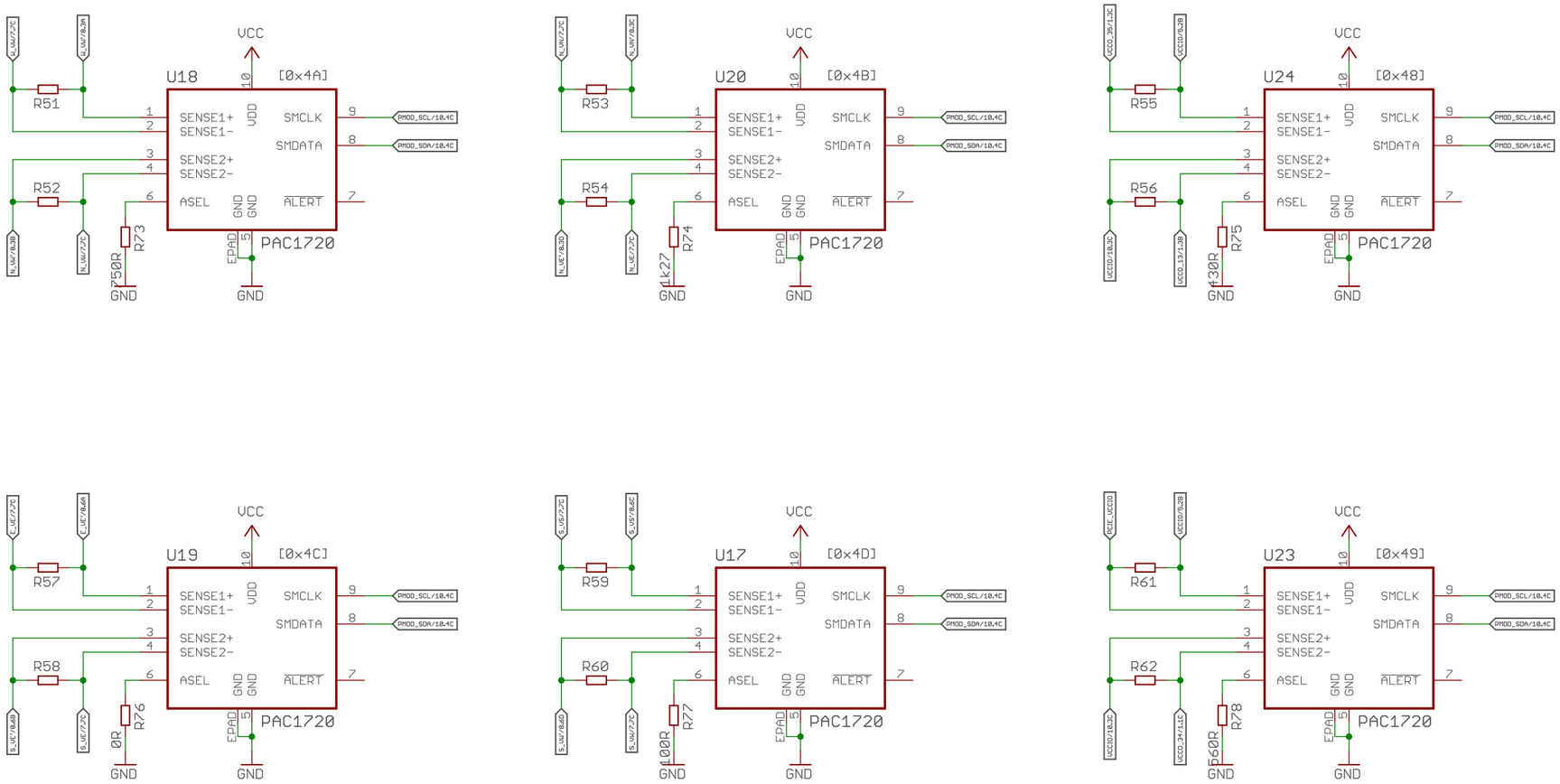

AXIOM Beta Test

Sensor Power Sensing

axiom_beta_power_board_v0.27

not saved!

Sheet: 9/10

Copyright (C) 2015 H.Poetzl
Licensed under CERN OHL v.1.2

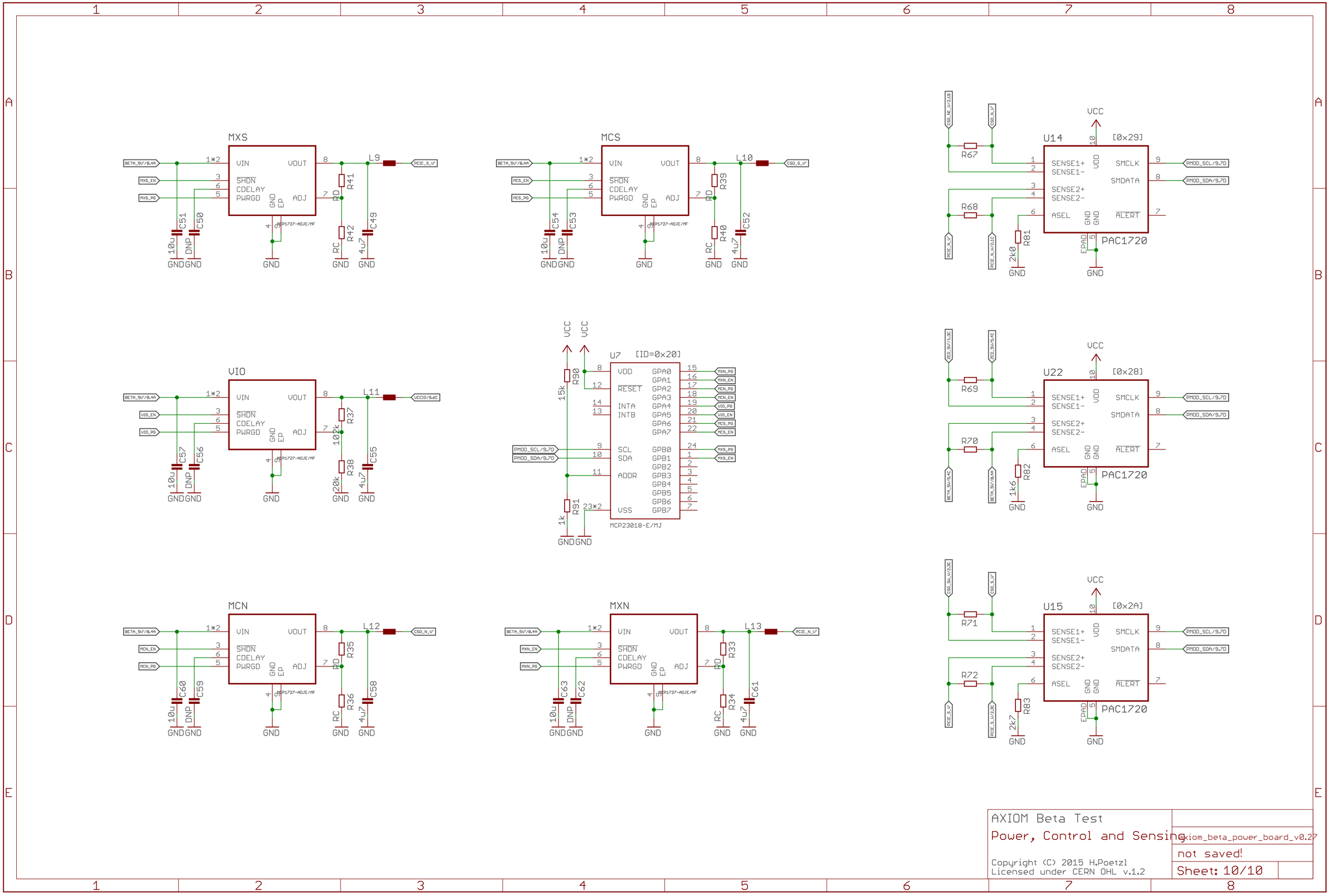
MXS
MCS
VIO
MCN
MXN
U7 [ID=0x20]
MCP23018-E/MJ
U14 [0x29]
U22 [0x28]
U15 [0x2A]
PAC1720
VCC
GND
AXIOM Beta Test
Power, Control and Sensing
Copyright (C) 2015 H.Poetzl
Licensed under CERN OHL v.1.2
axiom_beta_power_board_v0.27
not saved!
Sheet: 10/10