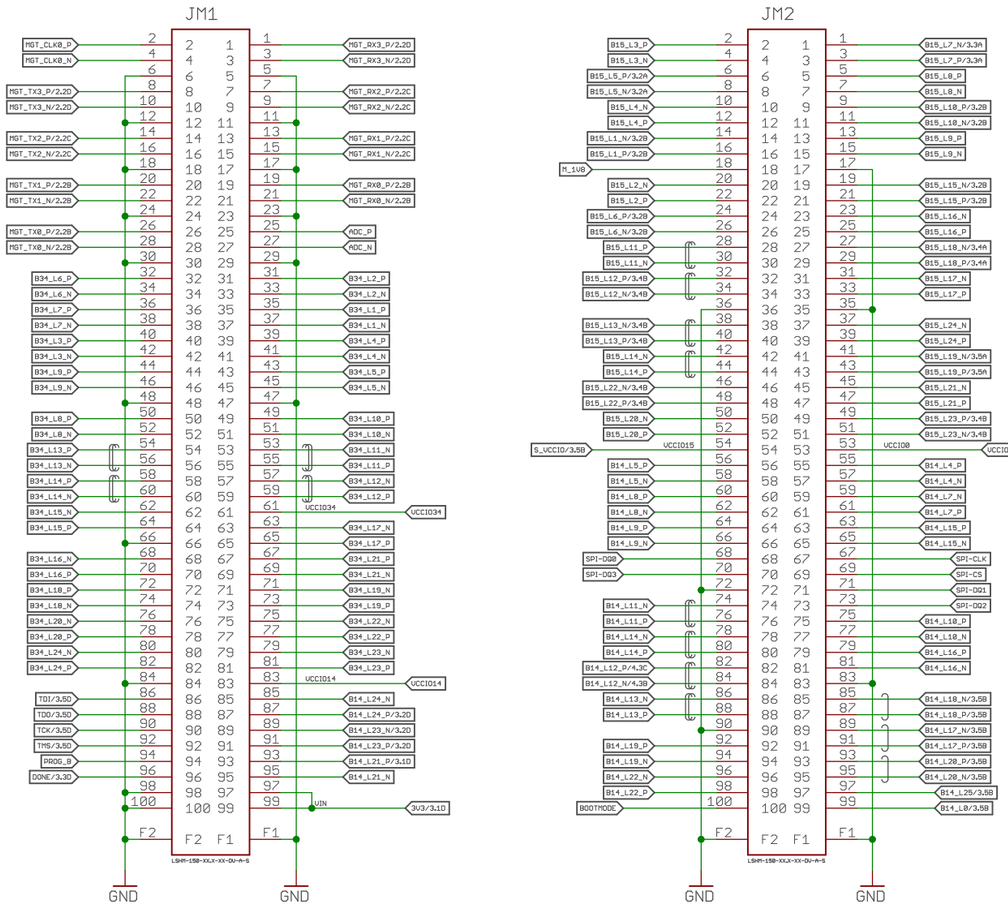

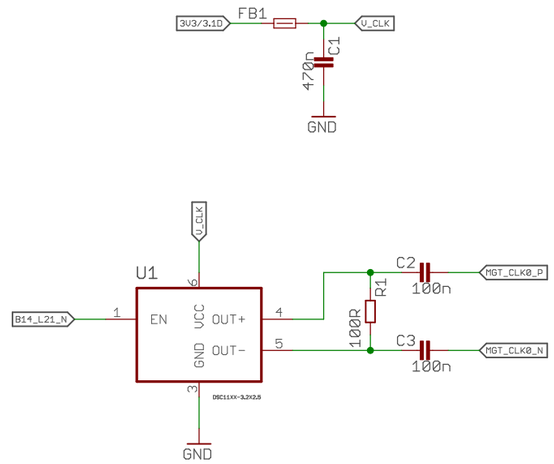

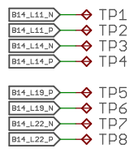

AXIOM Beta Module

Trenz SATA Plugin Module

Copyright (C) 2019 H.Poetzl
Licensed under CERN OHL v.1.2

axiom_beta_plugin_module_TE0714_SATA_v0.5

not saved!

Sheet: 1/4

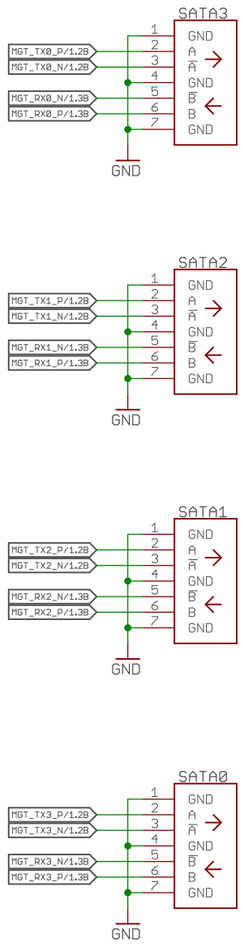

AXIOM Beta Module

Trenz SATA Plugin Module

Copyright (C) 2019 H.Poetzl
Licensed under CERN OHL v.1.2

axiom_beta_plugin_module_TE0714_SATA_v0.5

not saved!

Sheet: 2/4

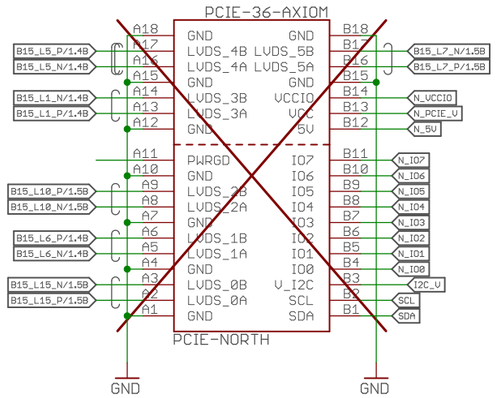

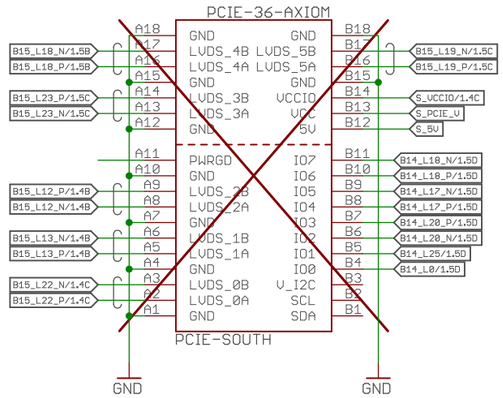

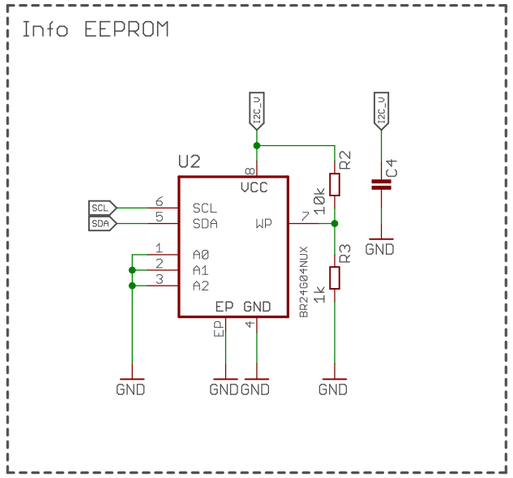

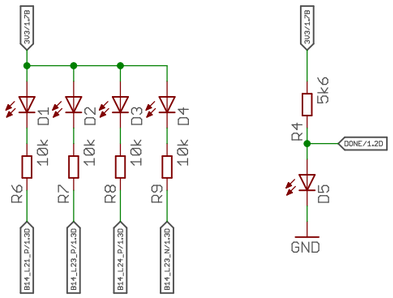

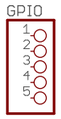

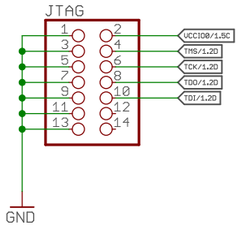

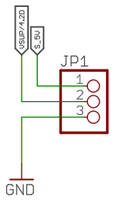

AXIOM Beta Module

Trenz SDI Plugin Module

Copyright (C) 2017 H.Poetzl
Licensed under CERN OHL v.1.2

axiom_beta_plugin_module_TE0714_SATA_v0.5

not saved!

Sheet: 3/4

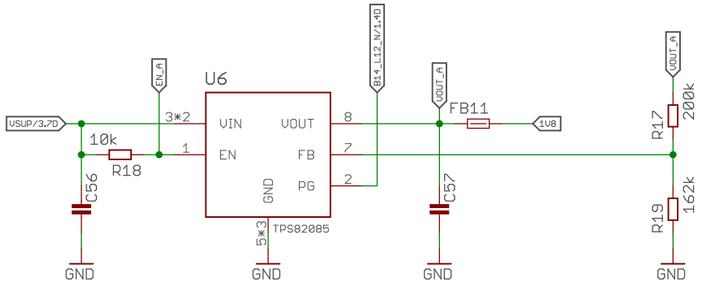

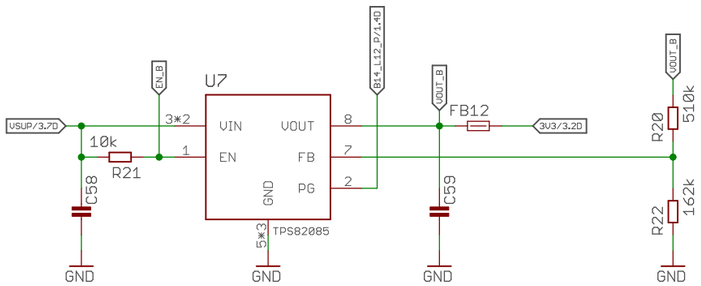

Avoid B14_L13_N/P because
of clash with sys_clk!!!

AXIOM Beta Module

Trenz SDI Plugin Module

Copyright (C) 2017 H.Poetzl
Licensed under CERN OHL v.1.2

axiom_beta_plugin_module_TE0714_SATA_v0.5

not saved!

Sheet: 4/4