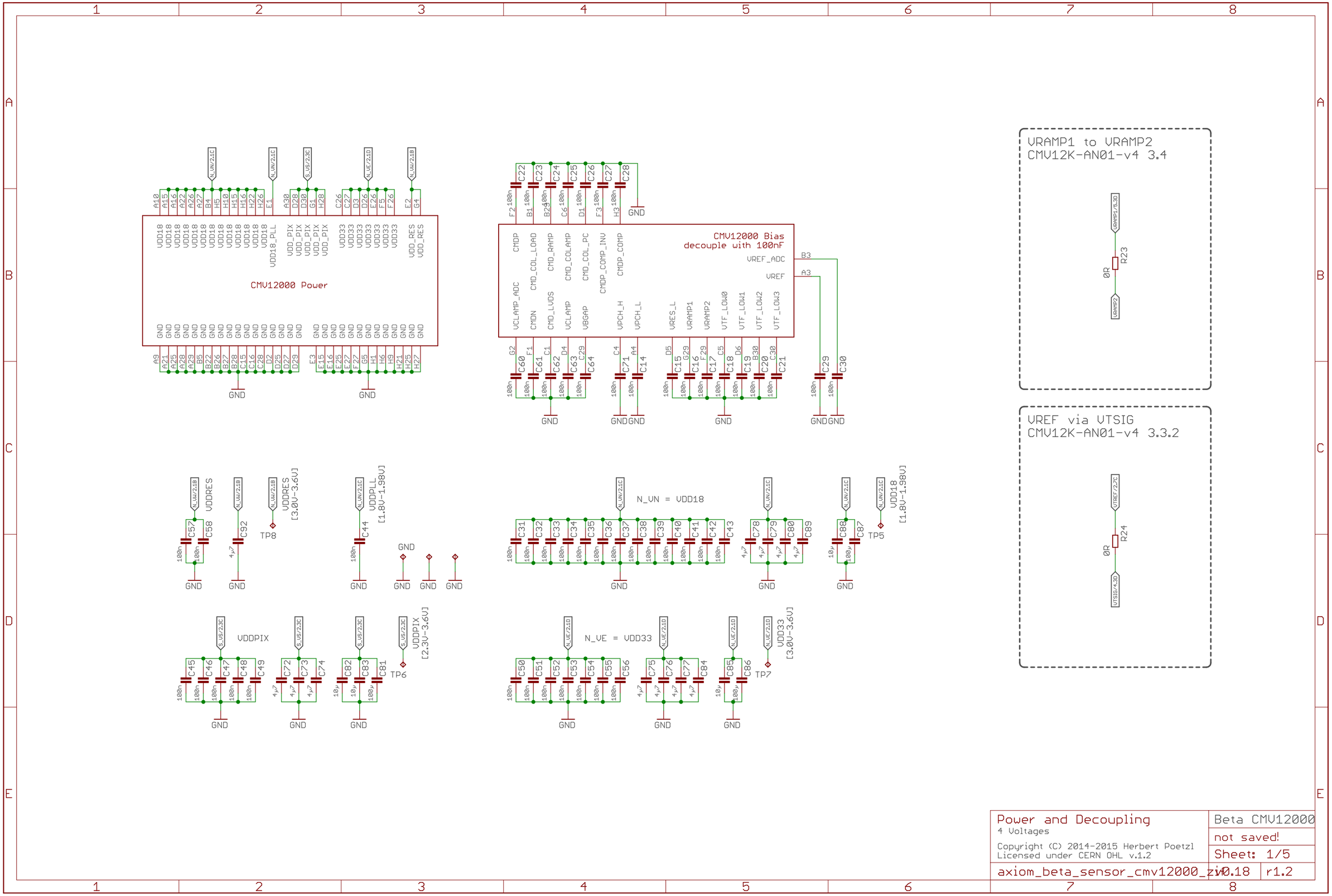
CMV12000 Power
CMV12000 Bias
decouple with 100nF
VREF_ADC
VREF
VRAMP1 to VRAMP2
CMV12K-AN01-v4 3.4
VREF via VTSIG
CMV12K-AN01-v4 3.3.2
VDDRES
VDDRES
[3.0V-3.6V]
VDDPLL
[1.8V-1.98V]
N_VN = VDD18
VDD18
[1.8V-1.98V]
VDDPIX
VDDPIX
[2.3V-3.6V]
N_VE = VDD33
VDD33
[3.0V-3.6V]
GND
TP8
TP5
TP6
TP7
R23
R24
0R
Power and Decoupling
4 Voltages
Copyright (C) 2014-2015 Herbert Poetzl
Licensed under CERN OHL v.1.2
Beta CMV12000
not saved!
Sheet: 1/5
axiom_beta_sensor_cmv12000_v0.18
r1.2

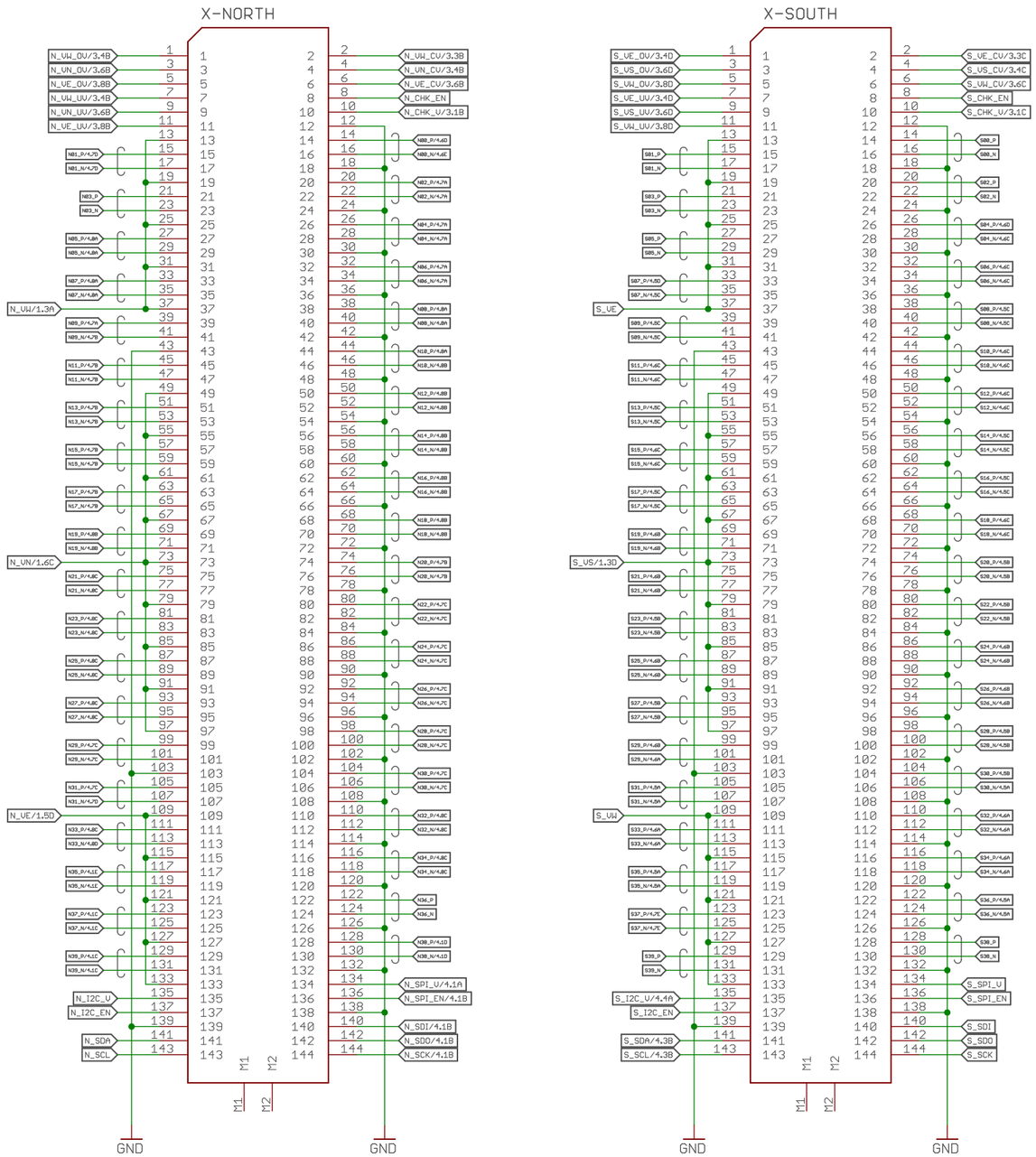

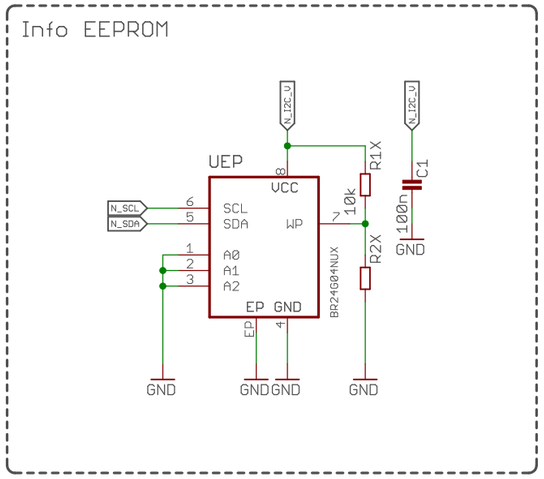

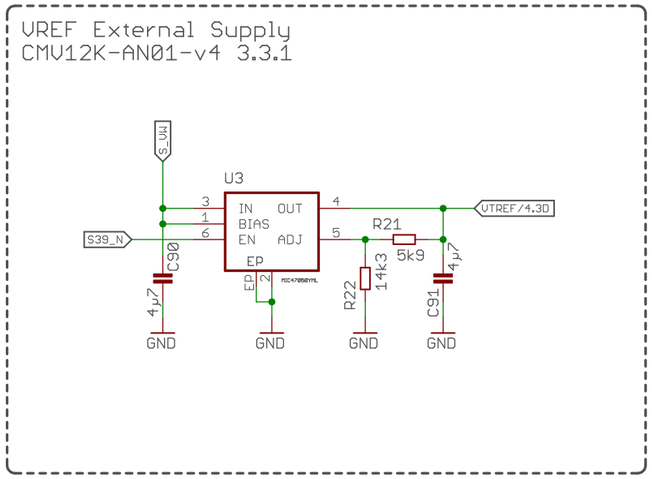

Interface, Info and VREF

Optional VREF Supply

Copyright (C) 2014-2015 Herbert Poetzl
Licensed under CERN OHL v.1.2

Beta CMV12000	
not saved!	
Sheet: 2/5	
axiom_beta_sensor_cmv12000_zi	v0.18 r1.2

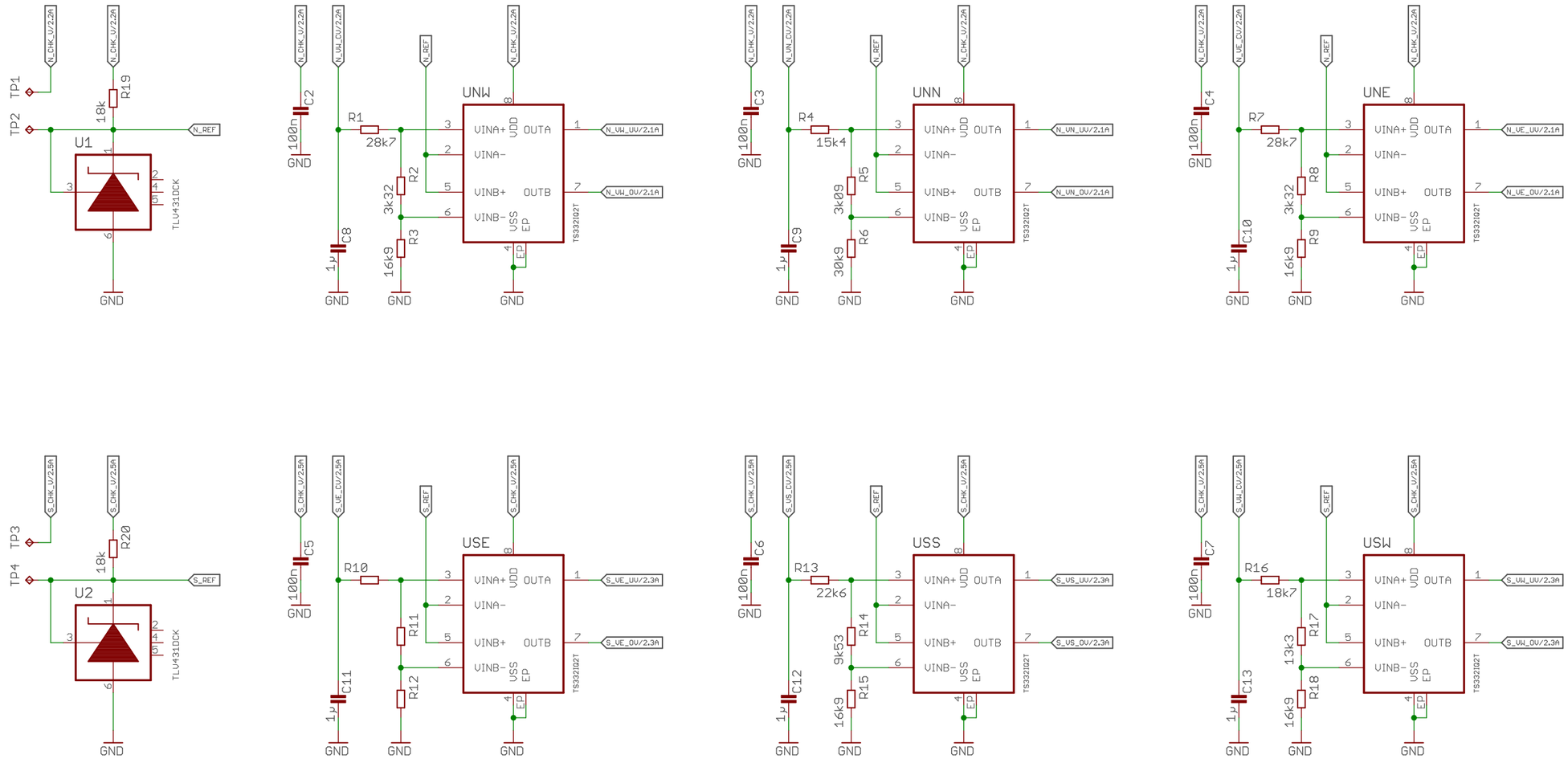

Over/Under Voltage Check 4 Voltages	Beta CMV12000
Copyright (C) 2014-2015 Herbert Poetzl Licensed under CERN OHL v.1.2	not saved!
	Sheet: 3/5
axiom_beta_sensor_cmv12000_zv	v0.18 r1.2

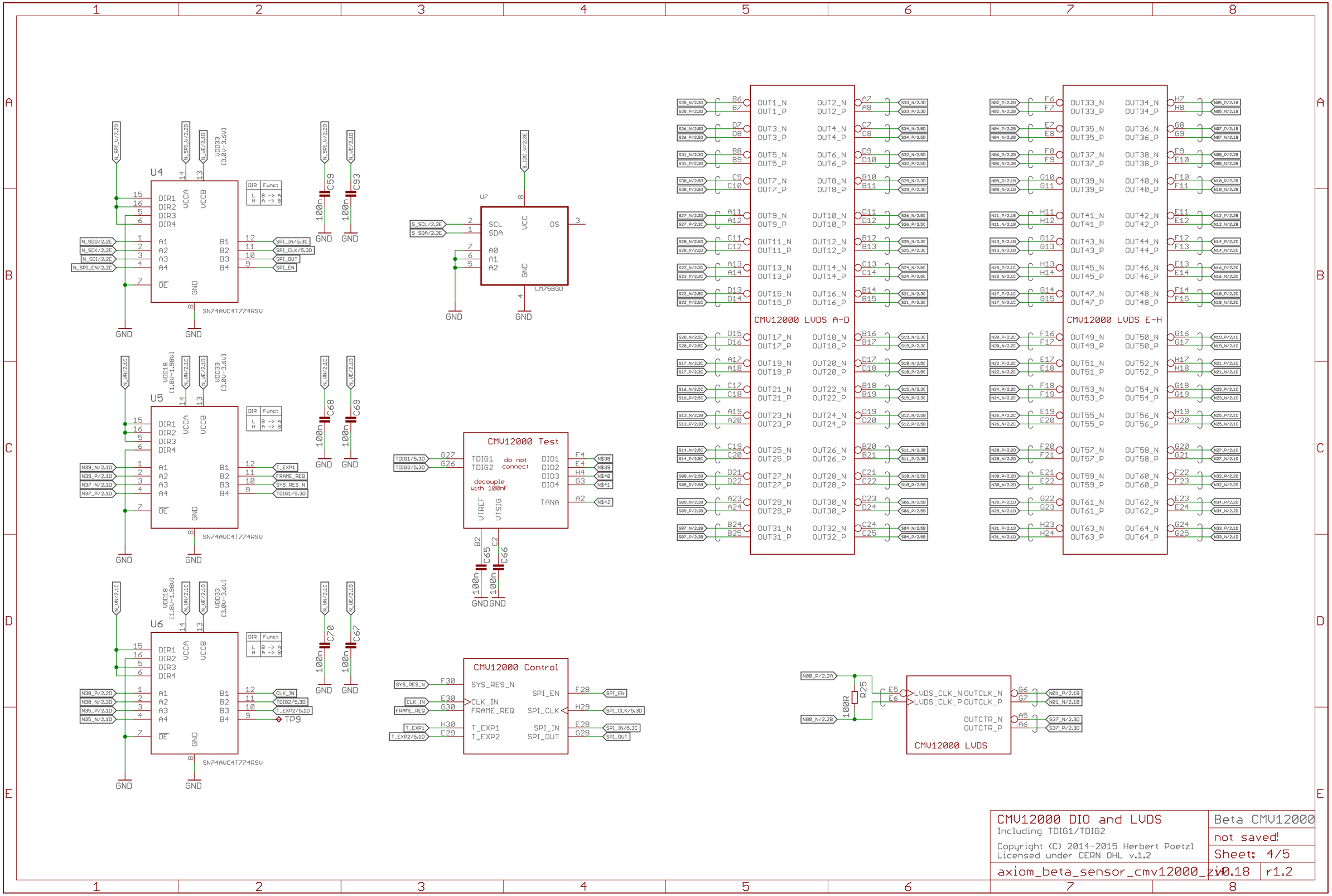

CMV12000 DIO and LVDS
Including TDIG1/TDIG2

Copyright (C) 2014-2015 Herbert Poetzl
Licensed under CERN OHL v.1.2

Beta CMV12000
not saved!
Sheet: 4/5
axiom_beta_sensor_cmv12000_zi v0.18 r1.2

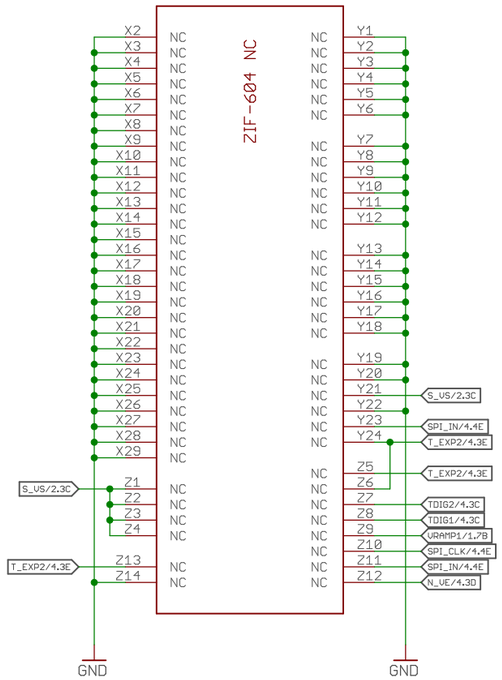

ZIF Unused Pins

Copyright (C) 2014-2015 Herbert Poetzl
Licensed under CERN OHL v.1.2

Beta CMV12000	
not saved!	
Sheet: 5/5	
axiom_beta_sensor_cmv12000_zif	v0.18 r1.2