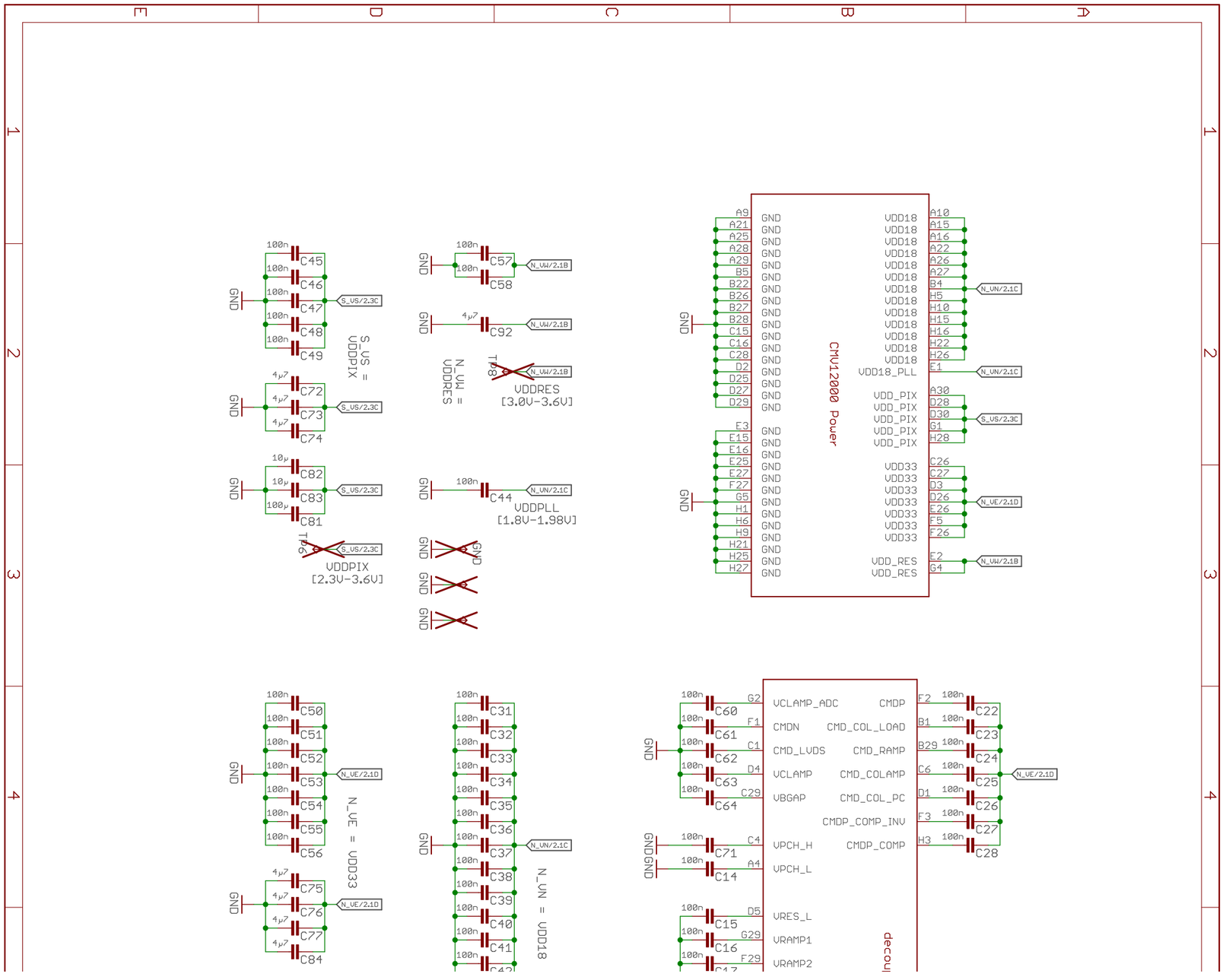
CMU2000 Power
VDD18_PLL
VDD_PIX
VDD33
VDD_RES
VDDPIX
[2.3V-3.6V]
VDDRES
[3.0V-3.6V]
VDDPLL
[1.8V-1.98V]
S_VS = VDDPIX
N_VW = VDDRES
N_VE = VDD33
N_VN = VDD18
VCLAMP_ADC
CMDN
CMD_LVDS
VCLAMP
VBGAP
VPCH_H
VPCH_L
VRES_L
VRAMP1
VRAMP2
CMDP
CMD_COL_LOAD
CMD_RAMP
CMD_COLAMP
CMD_COL_PC
CMDP_COMP_INV
CMDP_COMP
GND
N_VN/2.1C
S_VS/2.3C
N_VW/2.1B
N_VE/2.1D

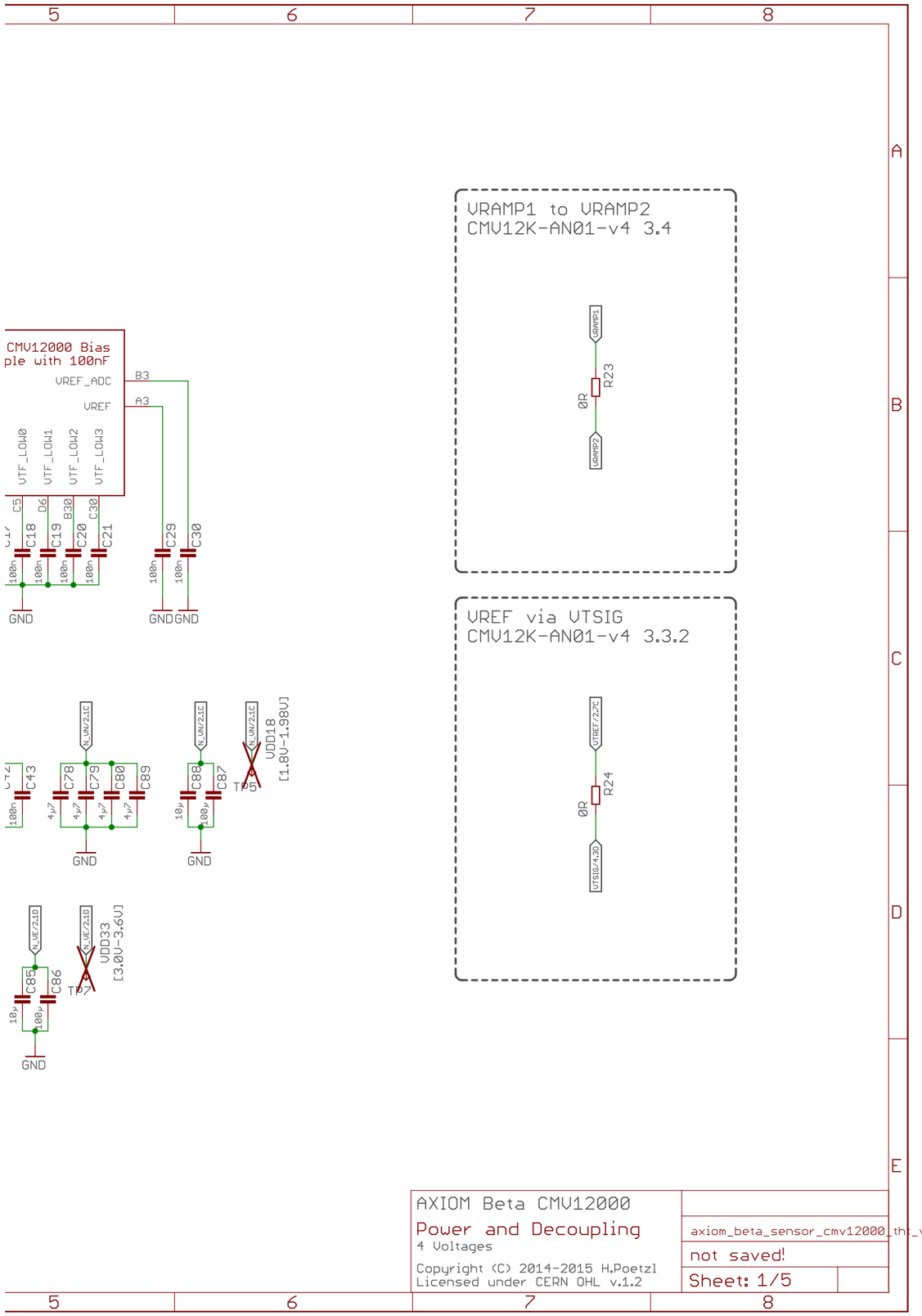

AXIOM Beta CMV12000

Power and Decoupling

4 Voltages

Copyright (C) 2014-2015 H.Poetzl
Licensed under CERN OHL v.1.2

axiom_beta_sensor_cmv12000_thi_v0.16_r1.5c_jlcpcb

not saved!

Sheet: 1/5

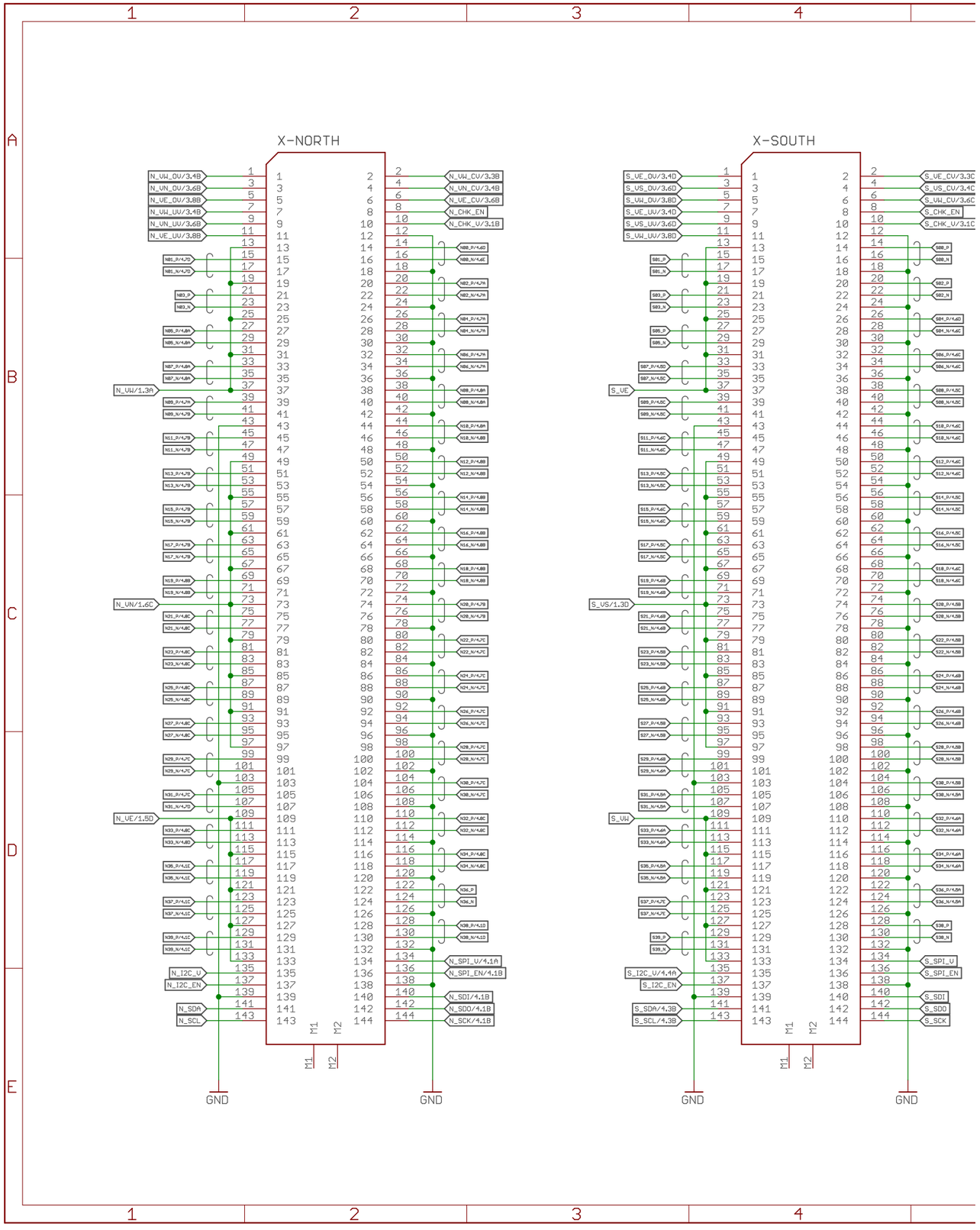
X-NORTH
X-SOUTH
N_UW/1.3H
N_UN/1.6C
N_VE/1.5G
S_VE
S_US/1.3D
S_VW
GND

Info EEPROM

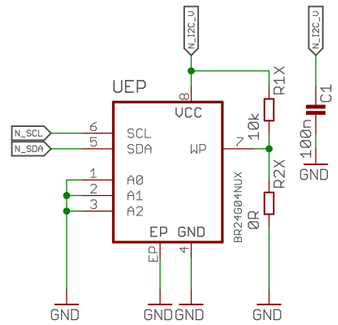

VREF External Supply
CMV12K-AN01-v4 3.3.1

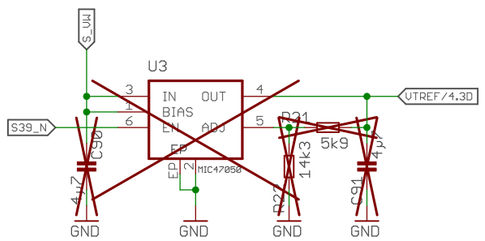

AXIOM Beta CMV12000

Interface, Info and VREF

Optional VREF Supply

Copyright (C) 2014-2015 H.Poetzl
Licensed under CERN OHL v.1.2

axiom_beta_sensor_cmv12000_thl_v0.16_r1.5c_jlcpcb

not saved!

Sheet: 2/5

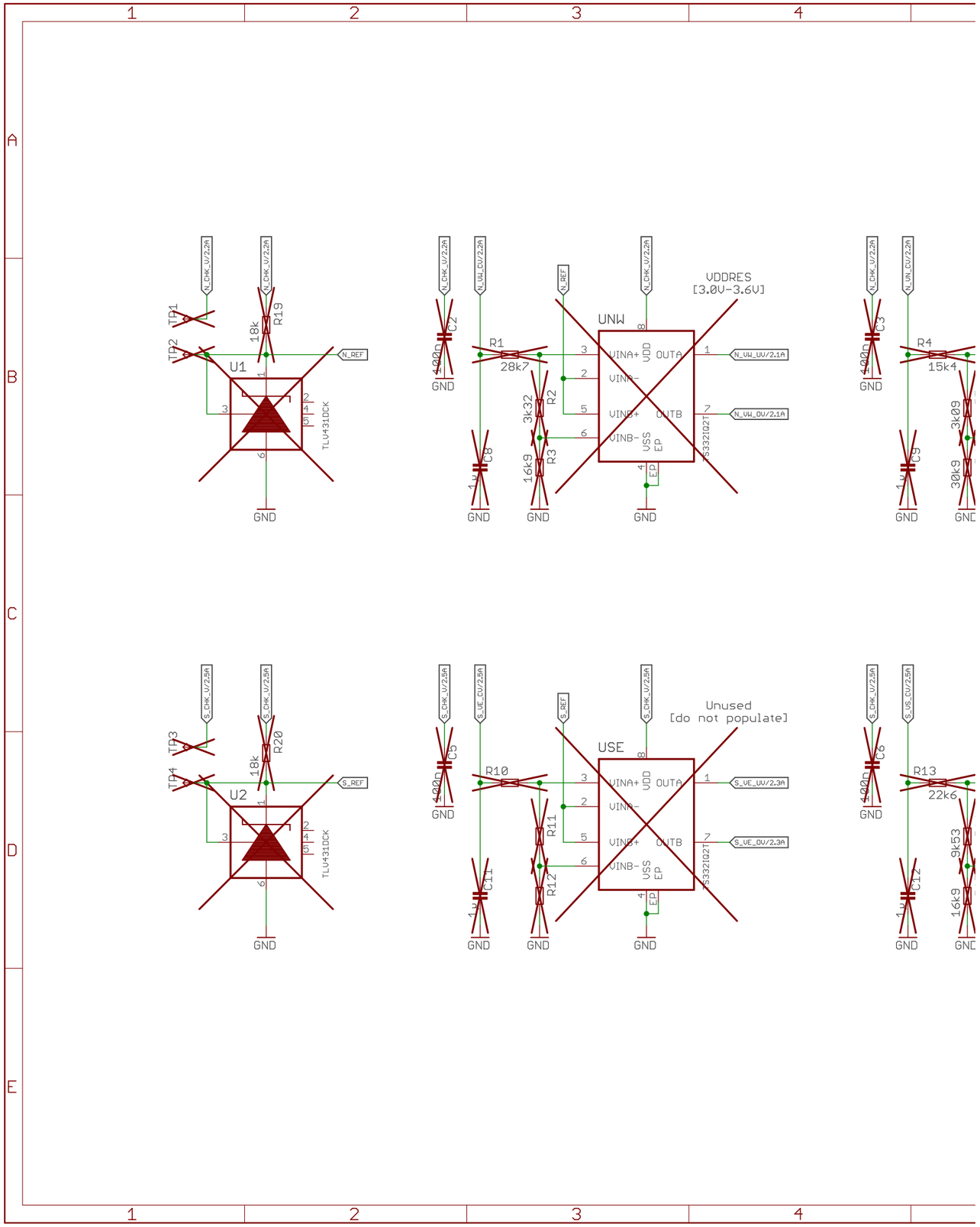
N_CHK_UV/2.2A
N_CHK_OV/2.2A
TP1
TP2
R19
18k
U1
N_REF
TLV431DCK
GND
N_VW_OV/2.2A
C2
400n
R1
28k7
R2
3k32
R3
16k9
C8
1u
N_REF
UNW
VDDRES
[3.0V-3.6V]
VDD
VINA+
VINA-
VINB+
VINB-
OUTA
OUTB
VSS
EP
S3321Q2T
N_VW_UV/2.1A
N_VW_OV/2.1A
N_UN_OV/2.2A
C3
R4
15k4
3k09
30k9
C5
S_CHK_UV/2.5A
S_VE_OV/2.5A
TP3
TP4
R20
18k
U2
S_REF
TLV431DCK
C9
R10
R11
R12
C11
USE
Unused
[do not populate]
S_VE_UV/2.3A
S_VE_OV/2.3A
S_VS_OV/2.5A
C6
R13
22k6
9k53
16k9
C12