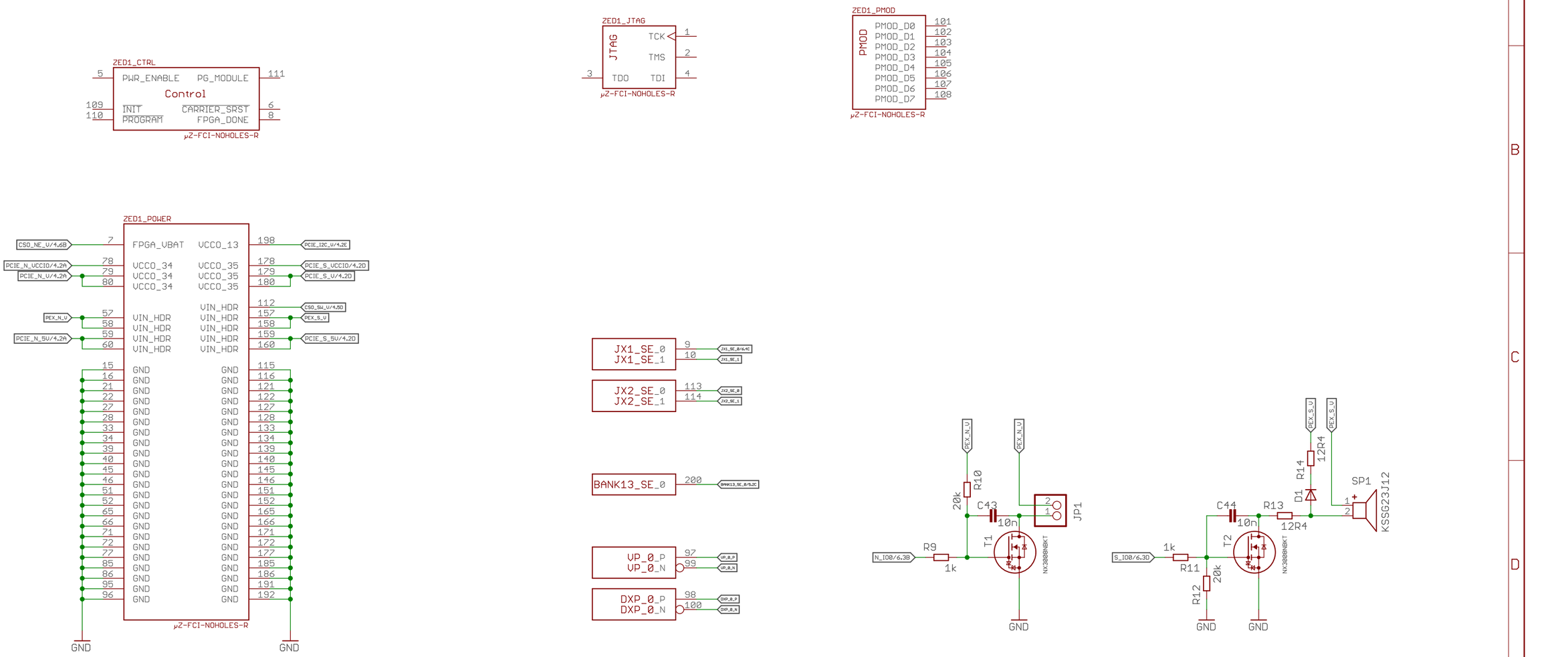

AXIOM Beta Main Board [Test]

Power and Control Interface

axiom_beta_main_board_v0.36_r1.2_offset

12/14/21 6:56 PM

Sheet: 1/6

Copyright (C) 2014 H.Poetzl
Licensed under CERN OHL v.1.2

AXIOM Beta Main Board [Test]

ZYNQ LVDS Interface

axiom_beta_main_board_v0.36_r1.2_offset

12/14/21 6:56 PM

Sheet: 2/6

Copyright (C) 2014-2015 H.Poetzl
Licensed under CERN OHL v.1.2

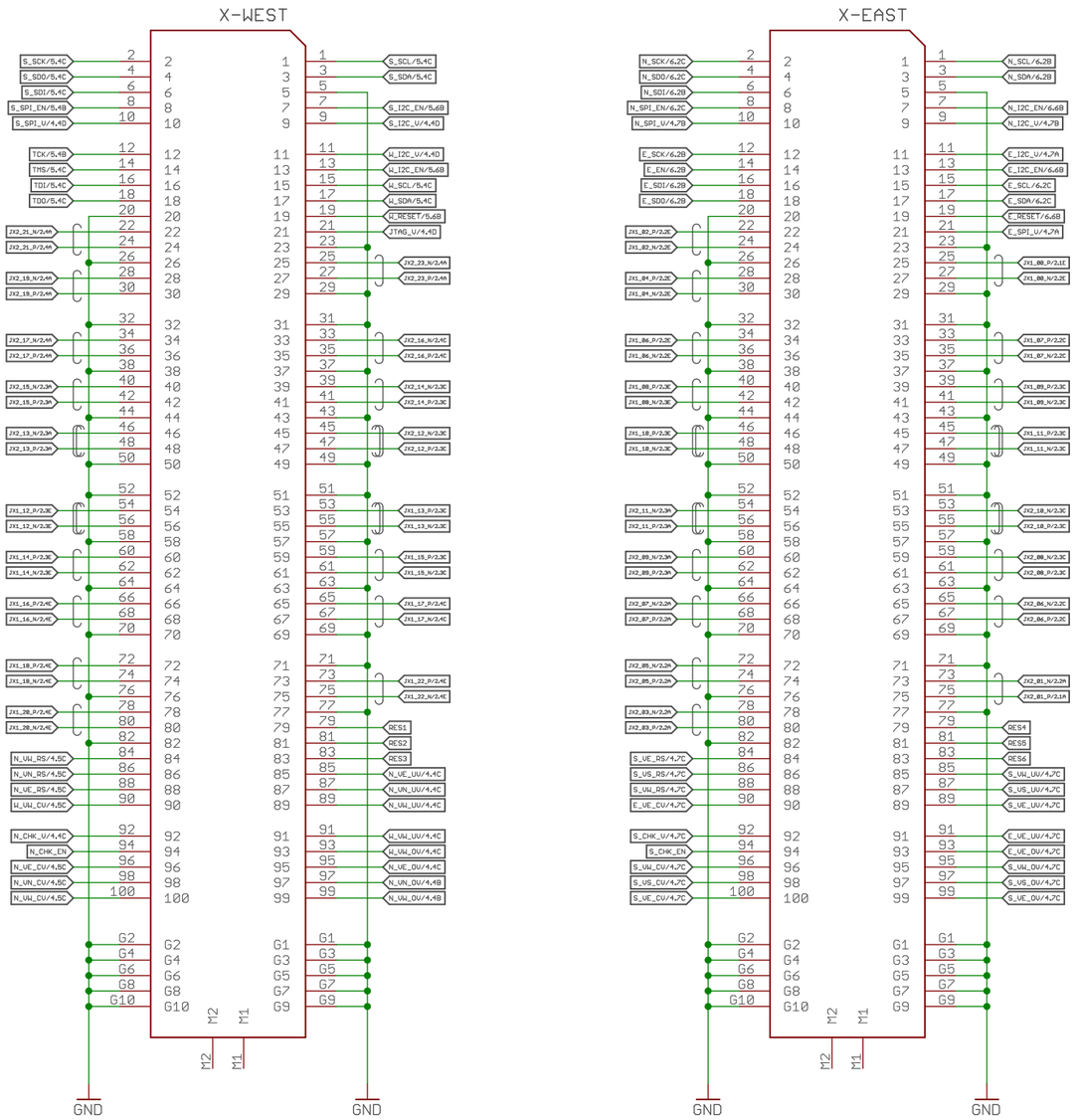

AXIOM Beta Main Board [Test]

Interface Board Connection

axiom_beta_main_board_v0.36_r1.2_offset

12/14/21 6:56 PM

Sheet: 3/6

Copyright (C) 2014-2015 H.Poetzl
Licensed under CERN OHL v.1.2

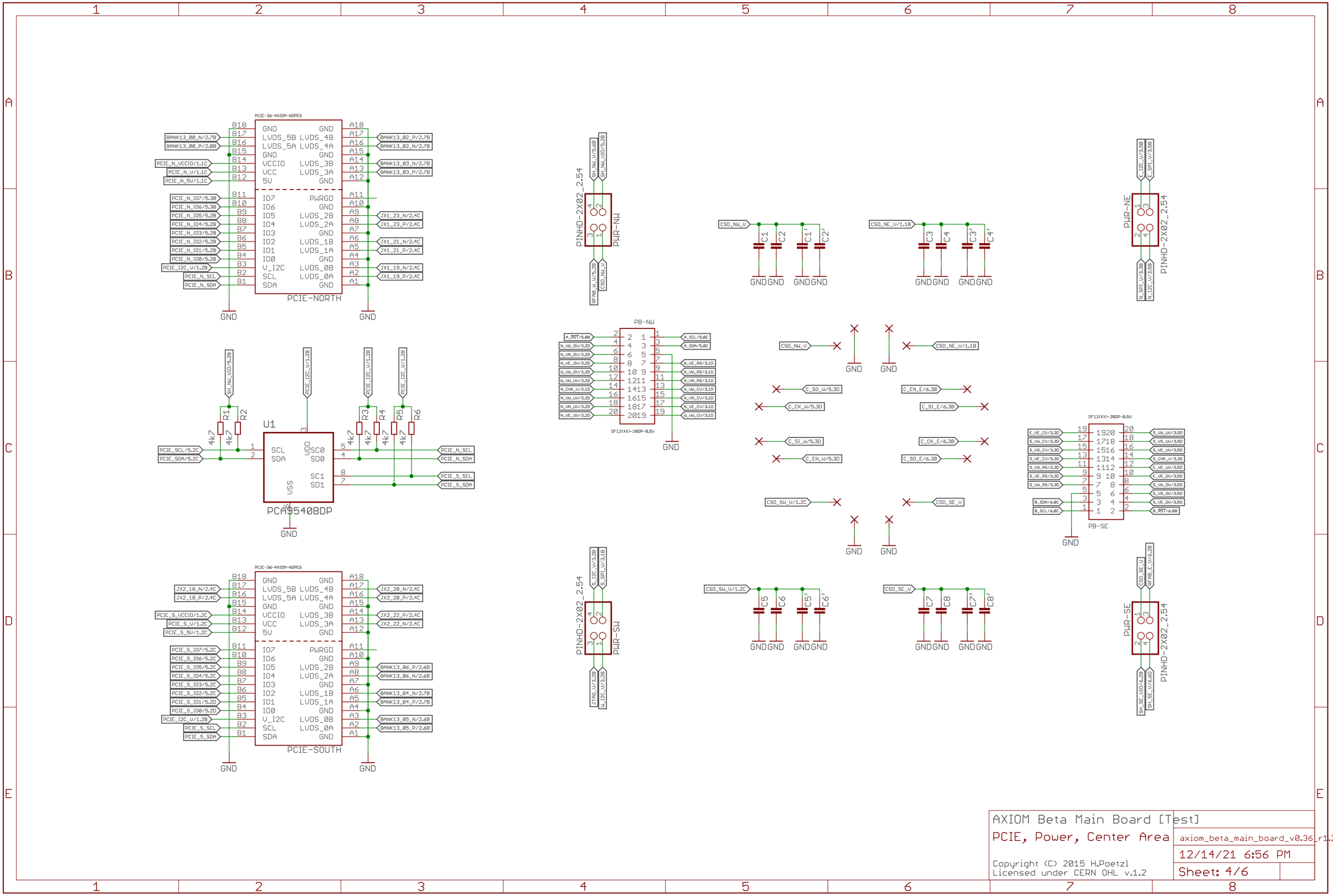

AXIOM Beta Main Board [Test]

PCIE, Power, Center Area

axiom_beta_main_board_v0.36_r1.2_offset

12/14/21 6:56 PM

Sheet: 4/6

Copyright (C) 2015 H.Poetzl
Licensed under CERN OHL v.1.2

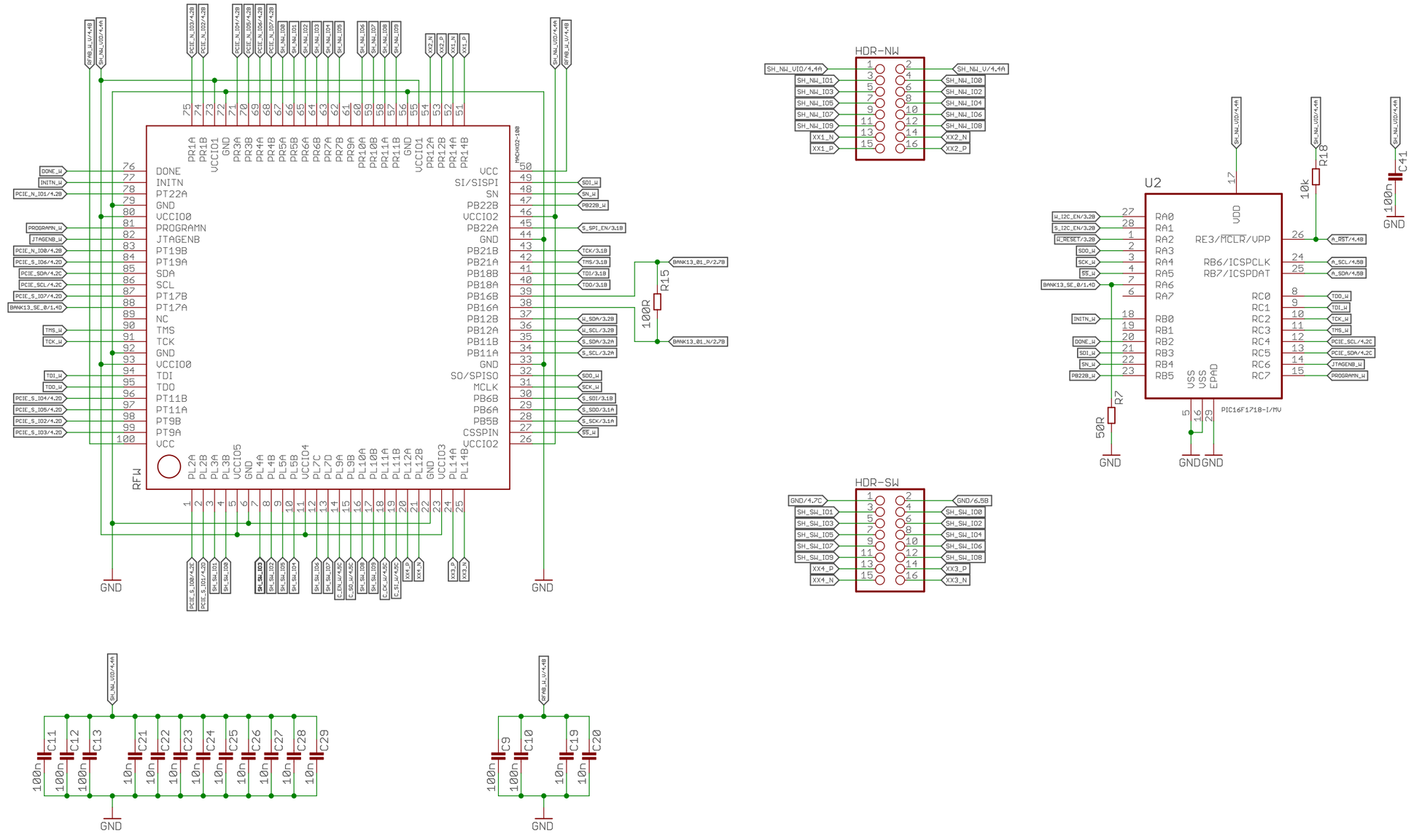

AXIOM Beta Main Board [Test]

Interface Fabric West

Copyright (C) 2015 H.Poetzl
Licensed under CERN OHL v.1.2

Sheet:

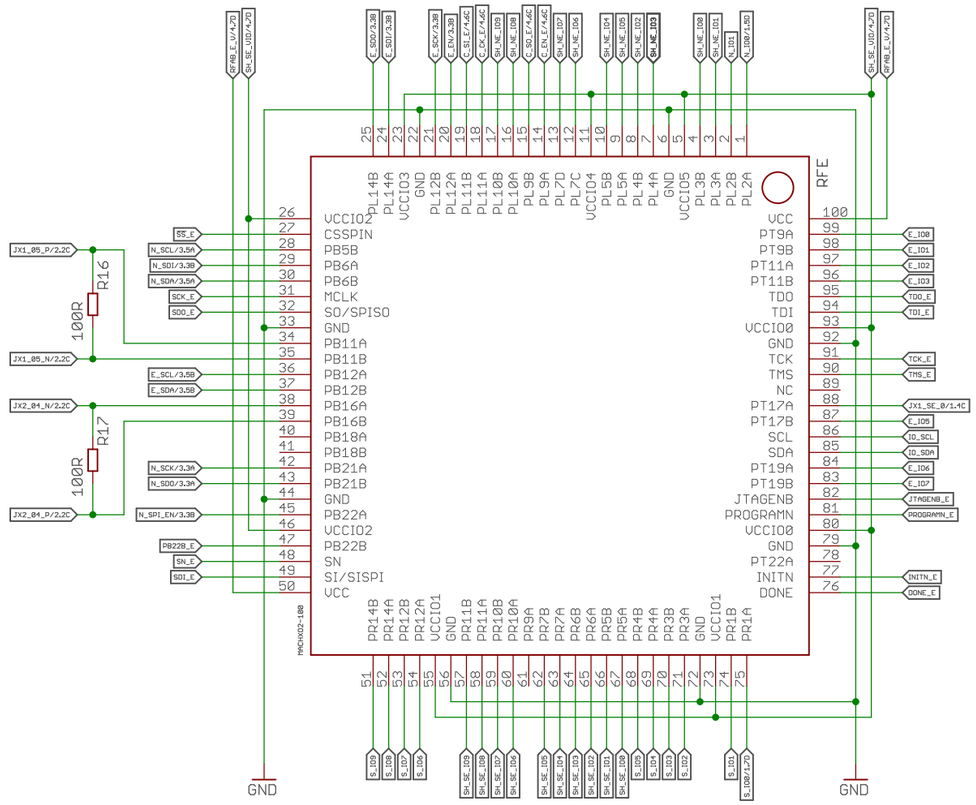

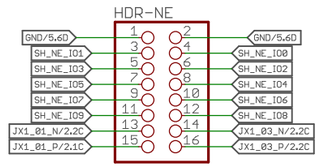

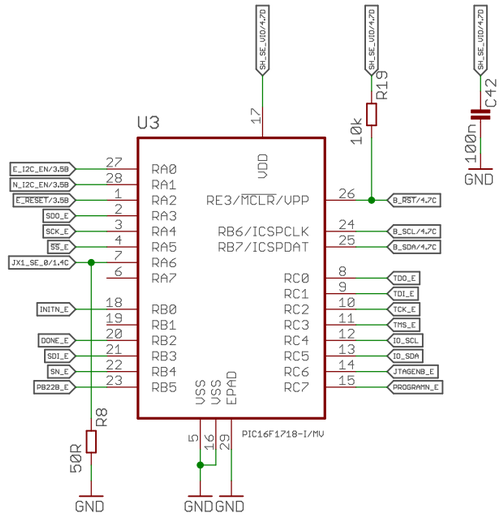

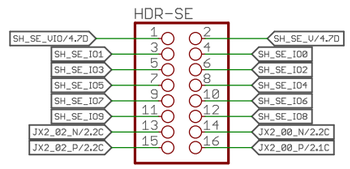

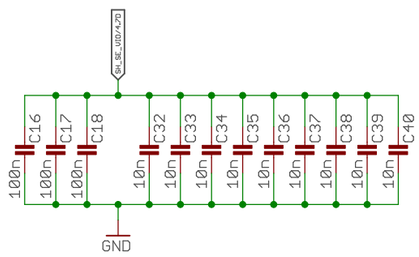

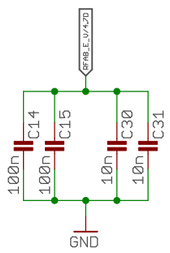

AXIOM Beta Main Board [Test]

Interface Fabric East

Copyright (C) 2015 H.Poetzl
Licensed under CERN OHL v.1.2

Sheet: