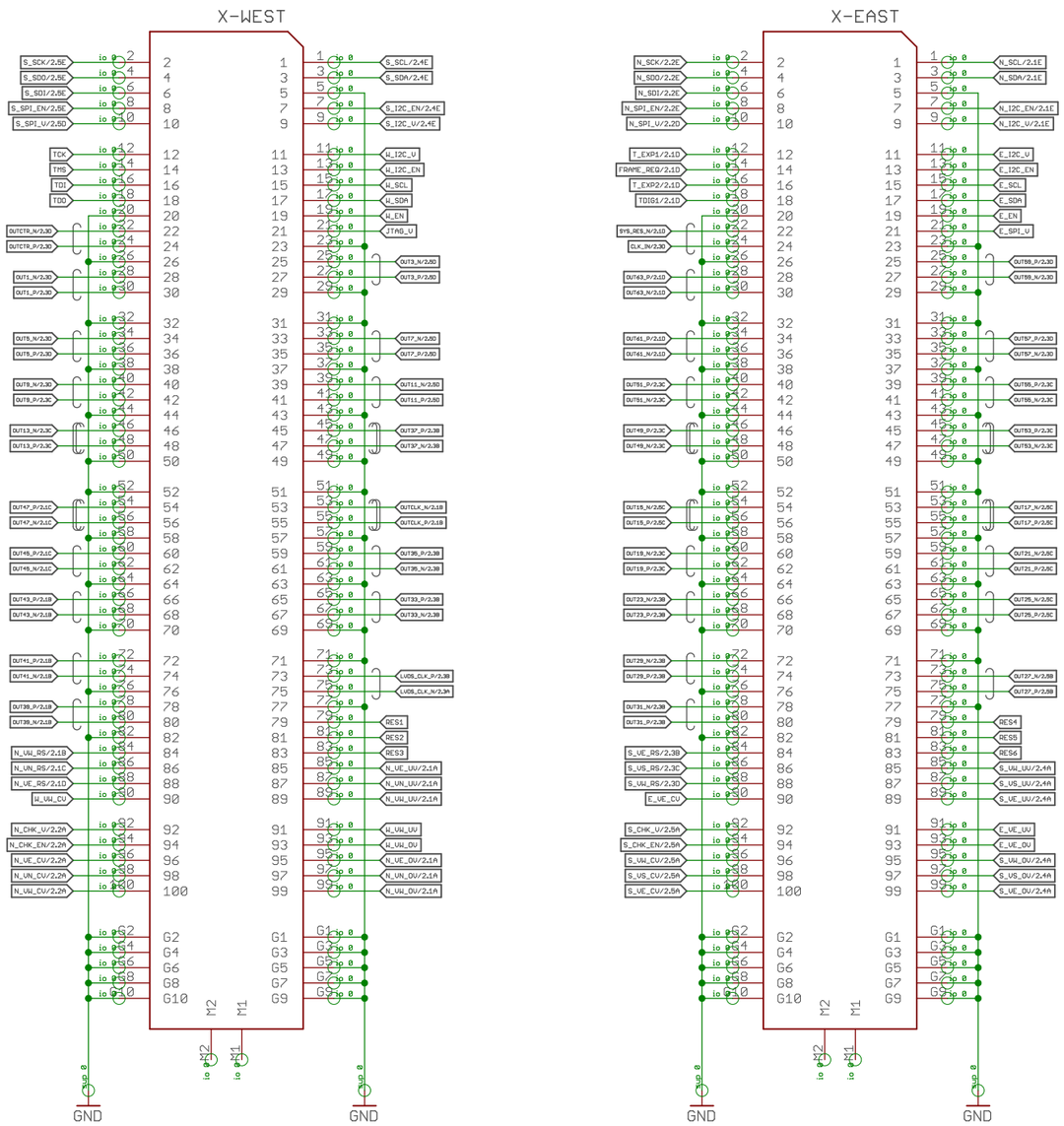

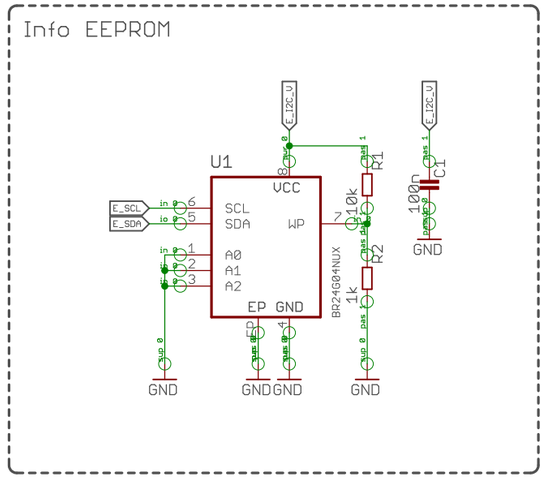

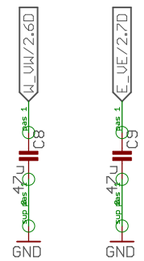

AXIOM Beta Dummy Interface

Beta Board Interface

E_SPI_U assumed equal to LVDS

Copyright (C) 2014-2015 Herbert Poetzl
Licensed under CERN OHL v.1.2

axiom_beta_interface_dummy_v0.13_r1.2

not saved!

Sheet: 1/2

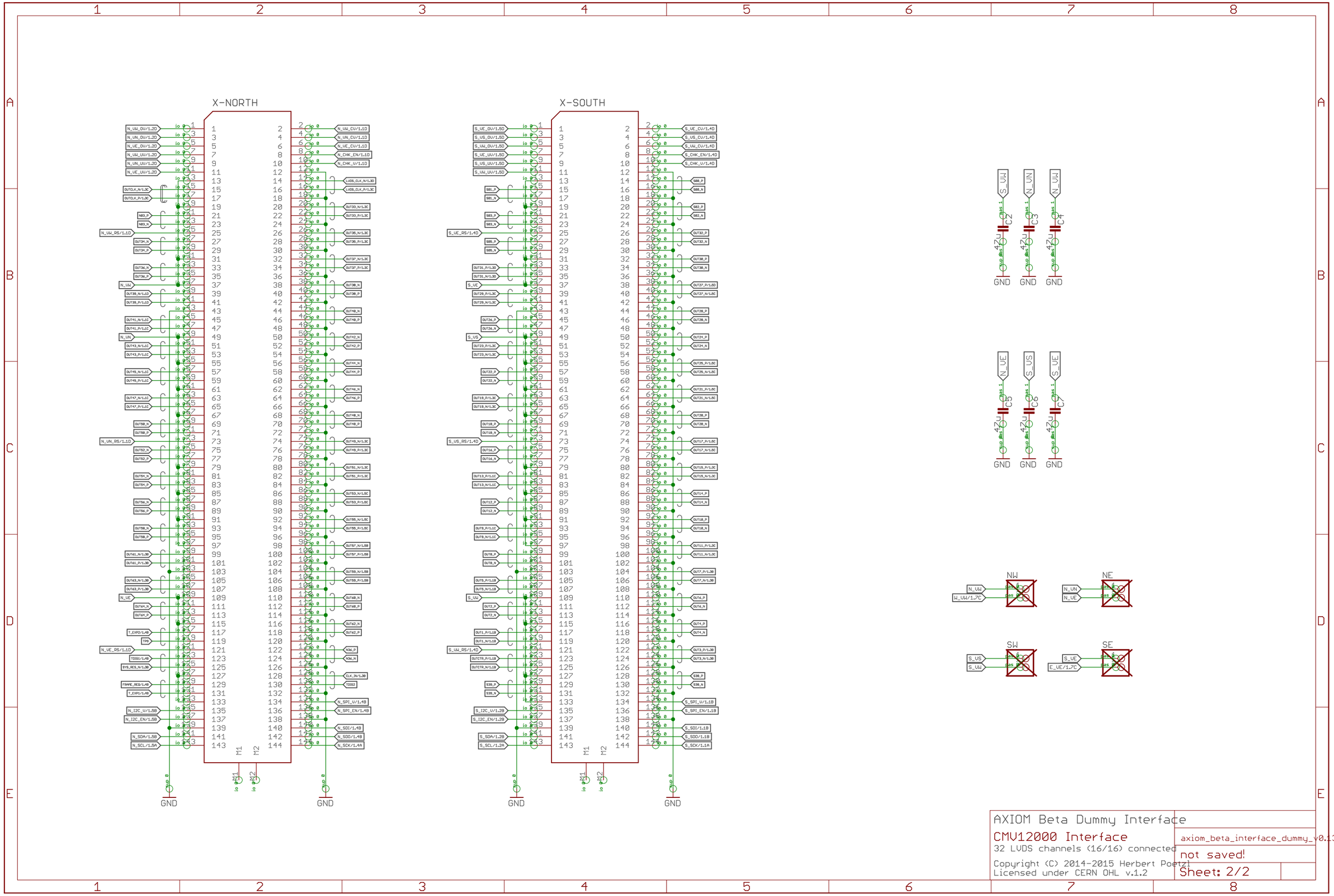
X-NORTH
X-SOUTH
GND
C2
C3
C4
C5
C6
C7
NW
NE
SW
SE
AXIOM Beta Dummy Interface
CMV12000 Interface
32 LVDS channels (16/16) connected
Copyright (C) 2014-2015 Herbert Poetzl
Licensed under CERN OHL v.1.2
axiom_beta_interface_dummy_v0.13_r1.2
not saved!
Sheet: 2/2