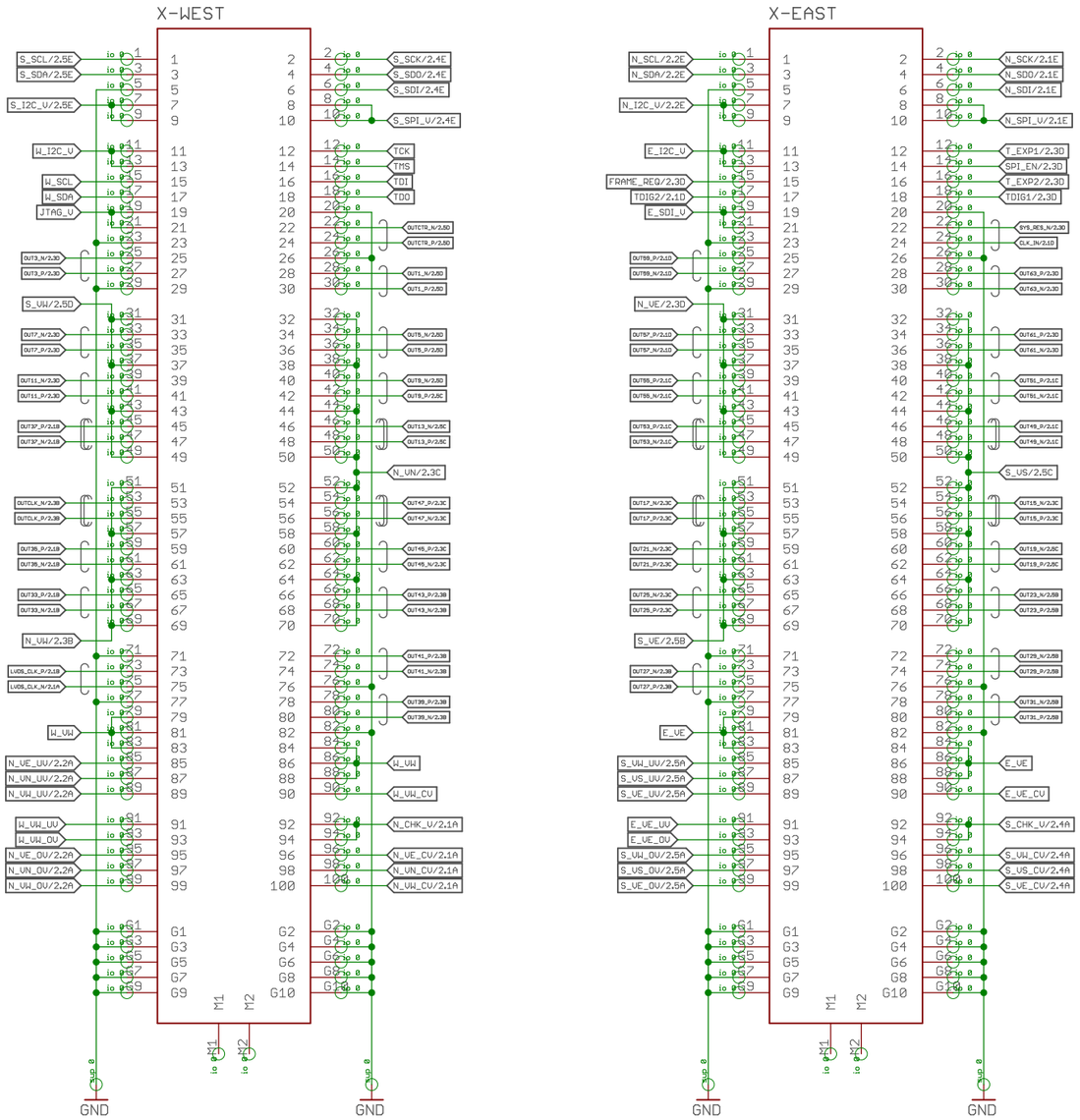

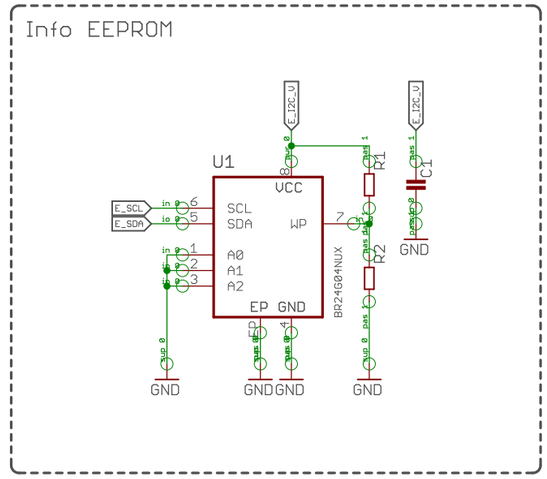

AXIOM Beta Dummy Interface

Beta Board Interface

E_SPI_U assumed equal to LVDS

Copyright (C) 2014 Herbert Poetzl
Licensed under CERN OHL v.1.2

axiom_beta_interface_dummy_v0.8

12/14/21 6:56 PM

Sheet: 1/2

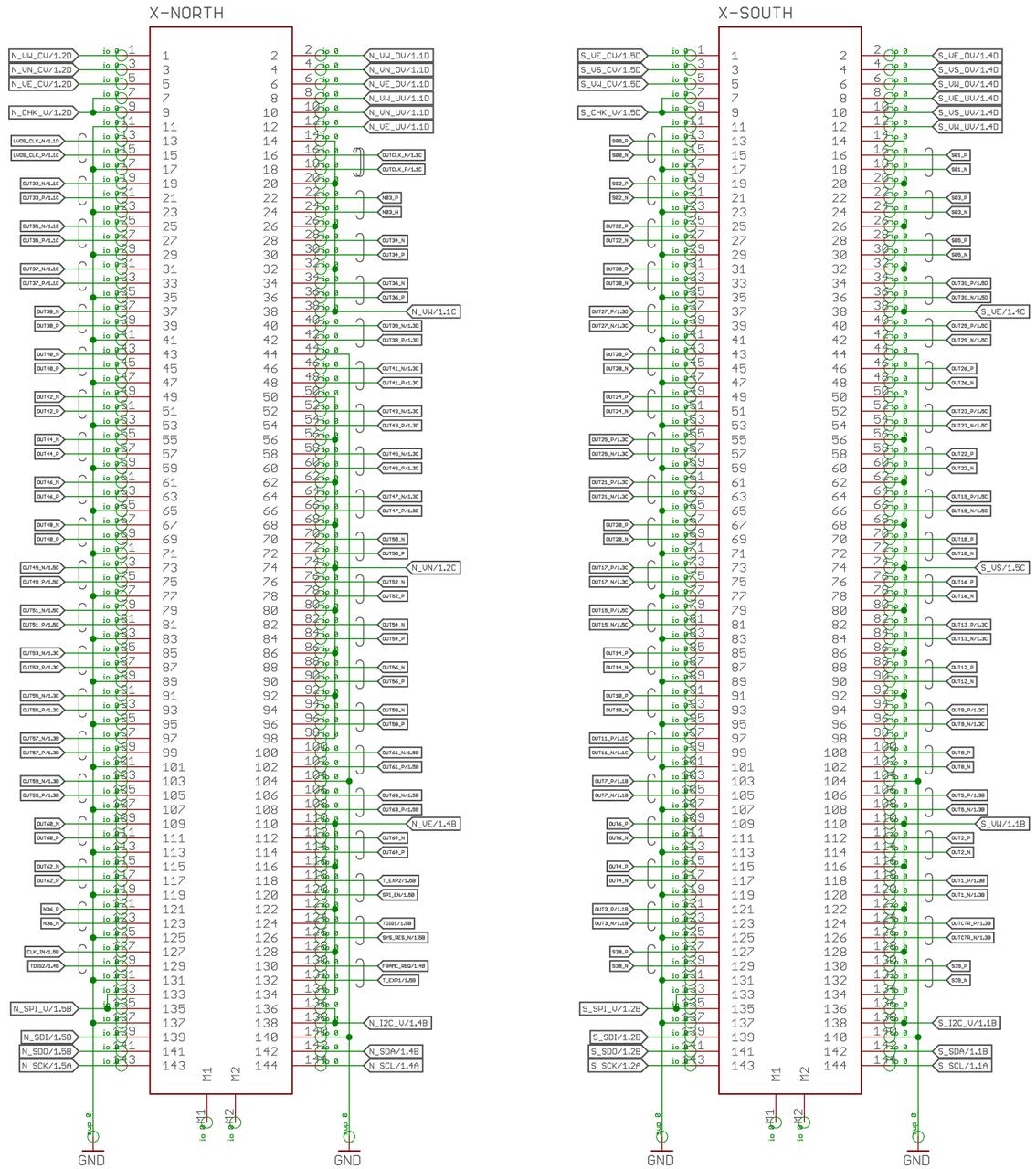

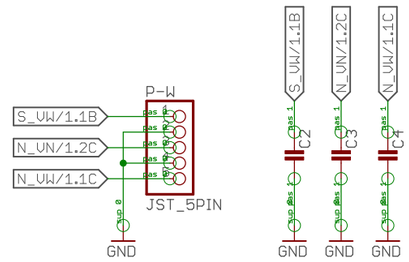

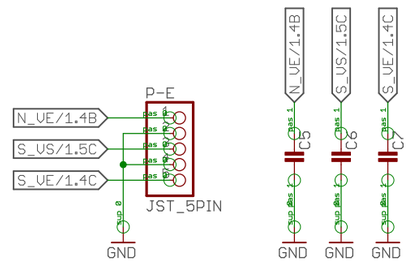

AXIOM Beta Dummy Interface

CMV12000 Interface

32 LVDS channels (16/16) connected

Copyright (C) 2014 Herbert Poetzl
Licensed under CERN OHL v.1.2

axiom_beta_interface_dummy_v0.8

12/14/21 6:56 PM

Sheet: 2/2