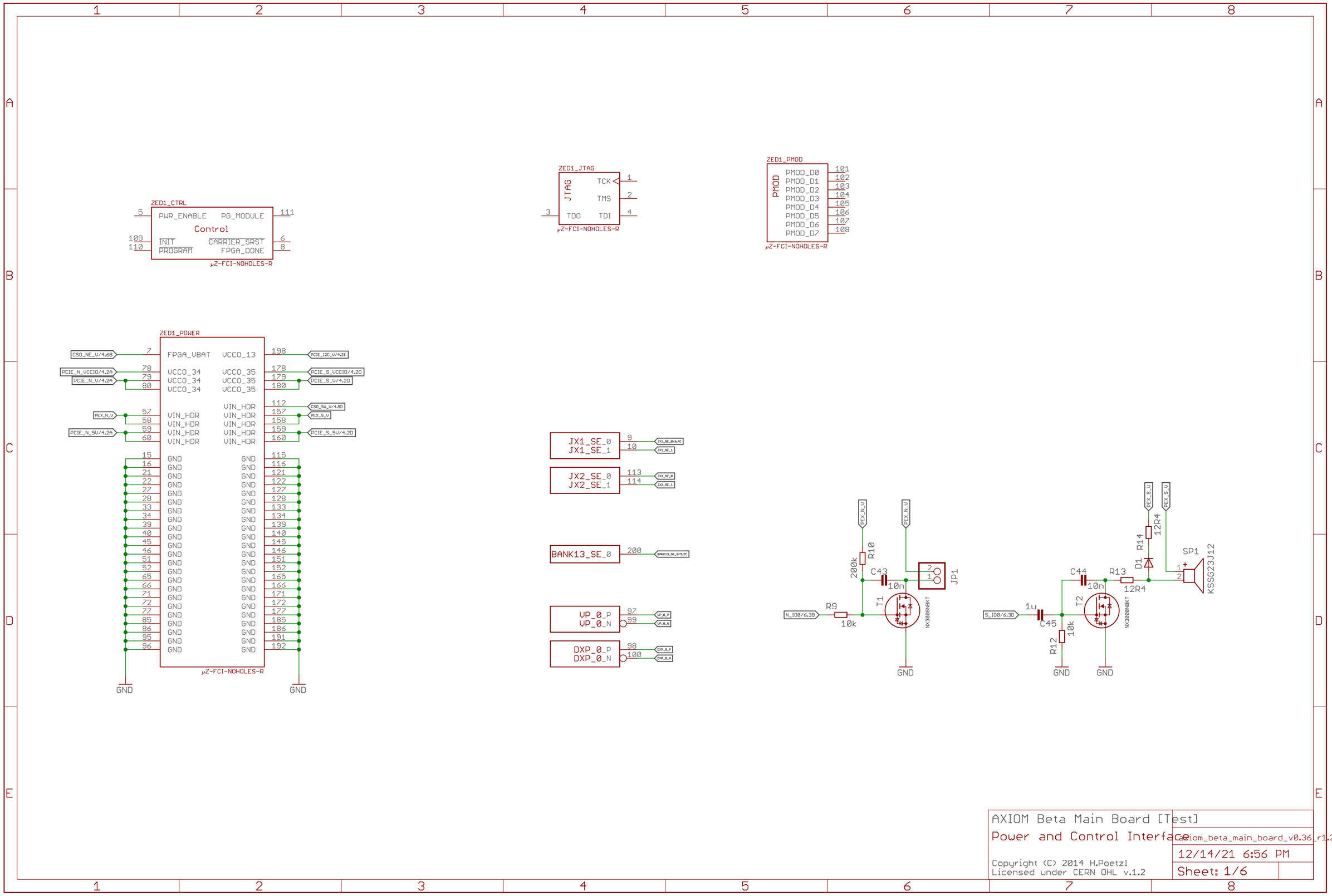
ZED1_CTRL
PWR_ENABLE
PG_MODULE
Control
INIT
CARRIER_SRST
PROGRAM
FPGA_DONE
μZ-FCI-NOHOLES-R
ZED1_JTAG
JTAG
TCK
TMS
TDO
TDI
μZ-FCI-NOHOLES-R
ZED1_PMOD
PMOD
PMOD_D0
PMOD_D1
PMOD_D2
PMOD_D3
PMOD_D4
PMOD_D5
PMOD_D6
PMOD_D7
μZ-FCI-NOHOLES-R
ZED1_POWER
FPGA_VBAT
VCCO_13
VCCO_34
VCCO_35
VIN_HDR
GND
μZ-FCI-NOHOLES-R
CS0_NE_V/4.6B
PCIE_N_VCCIO/4.2A
PCIE_N_V/4.2A
PEX_N_V
PCIE_N_5V/4.2A
PCIE_I2C_V/4.2E
PCIE_S_VCCIO/4.2D
PCIE_S_V/4.2D
CS0_SH_V/4.5D
PEX_S_V
PCIE_S_5V/4.2D
JX1_SE_0
JX1_SE_1
JX2_SE_0
JX2_SE_1
BANK13_SE_0
VP_0_P
VP_0_N
DXP_0_P
DXP_0_N
R10
200k
C43
10n
JP1
R9
10k
T1
NX3008NBKT
N_IO0/6.3B
GND
C44
10n
R13
12R4
R14
12R4
D1
SP1
KSSG23J12
1u
C45
10k
R12
T2
S_IO0/6.3D
AXIOM Beta Main Board [Test]
Power and Control Interface
axiom_beta_main_board_v0.36_r1.2
12/14/21 6:56 PM
Sheet: 1/6
Copyright (C) 2014 H.Poetzl
Licensed under CERN OHL v.1.2

AXIOM Beta Main Board [Test]

ZYNQ LVDS Interface

axiom_beta_main_board_v0.36_r1.2

12/14/21 6:56 PM

Sheet: 2/6

Copyright (C) 2014-2015 H.Poetzl
Licensed under CERN OHL v.1.2

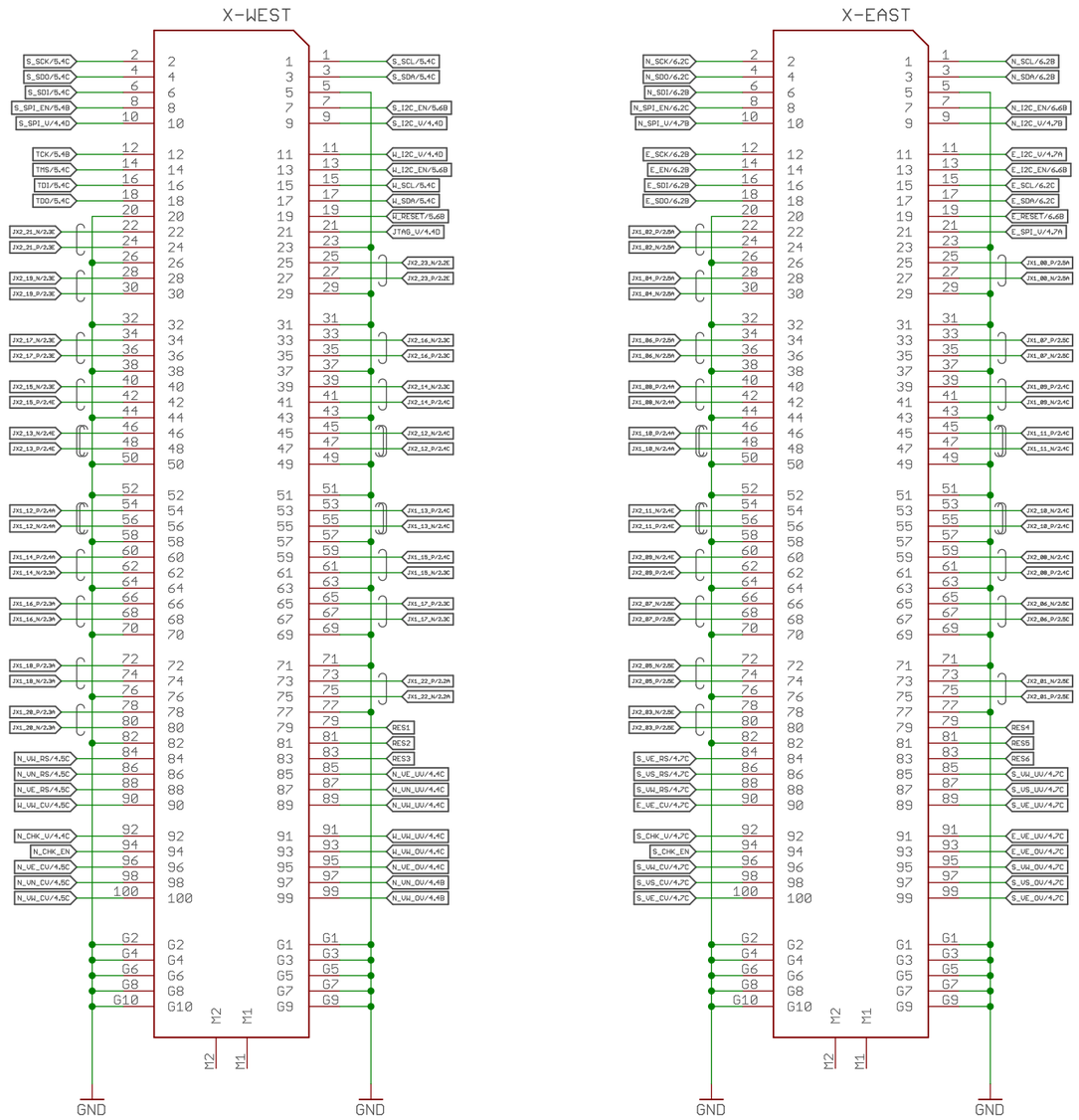

AXIOM Beta Main Board [Test]

Interface Board Connection

axiom_beta_main_board_v0.36_r1.2

12/14/21 6:56 PM

Sheet: 3/6

Copyright (C) 2014-2015 H.Poetzl
Licensed under CERN OHL v.1.2

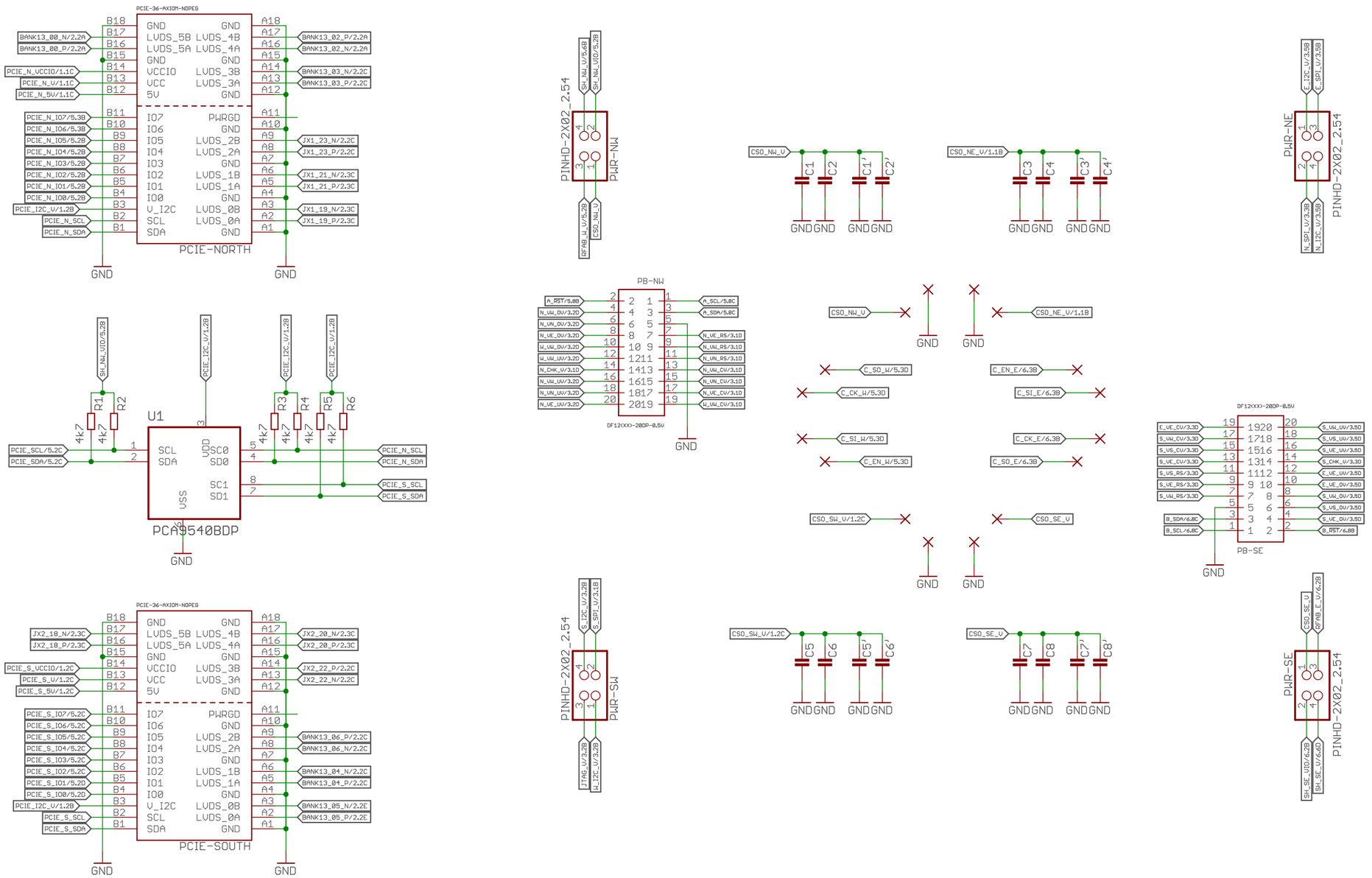

AXIOM Beta Main Board [Test]

PCIE, Power, Center Area

axiom_beta_main_board_v0.36_r1.2

12/14/21 6:56 PM

Sheet: 4/6

Copyright (C) 2015 H.Poetzl
Licensed under CERN OHL v.1.2

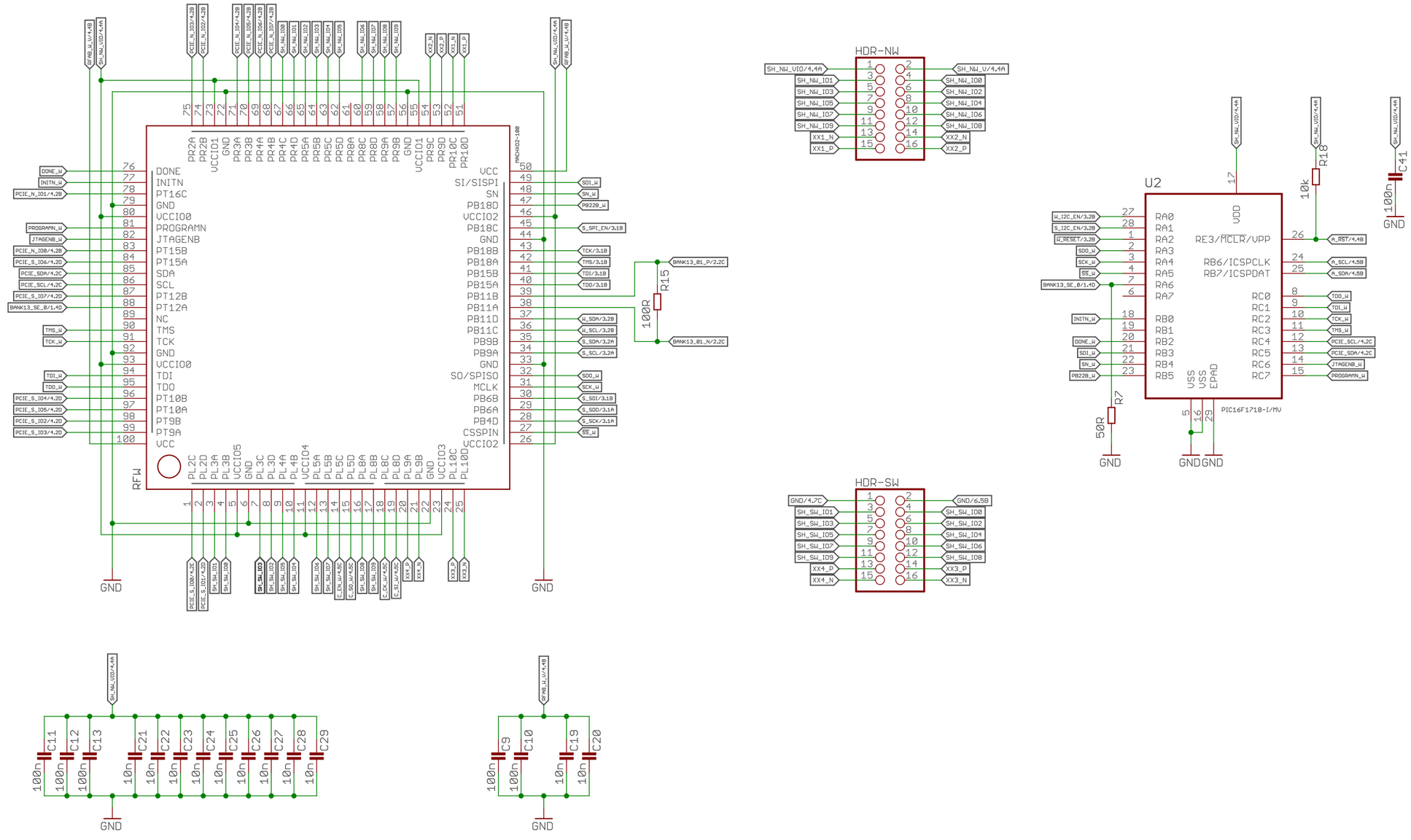

AXIOM Beta Main Board [Test]

Interface Fabric West

Copyright (C) 2015 H.Poetzl
Licensed under CERN OHL v.1.2

Sheet:

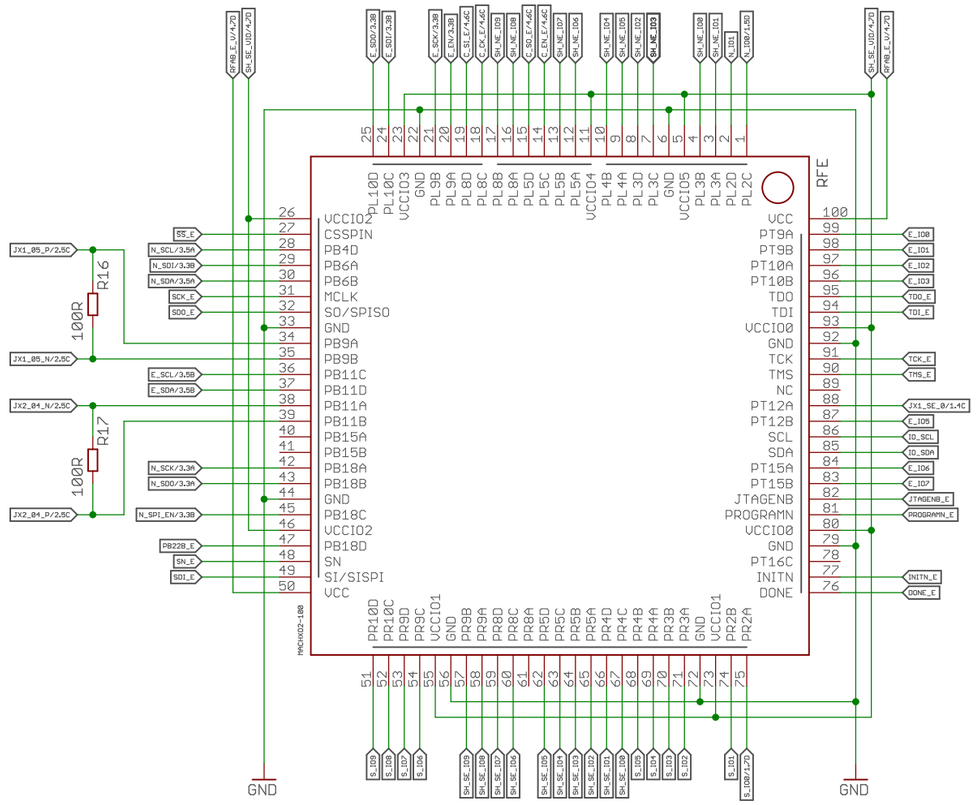

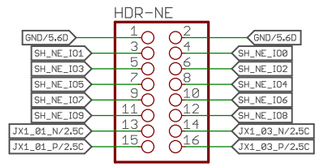

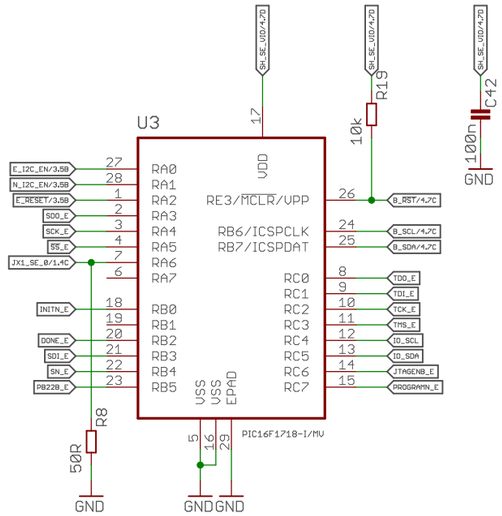

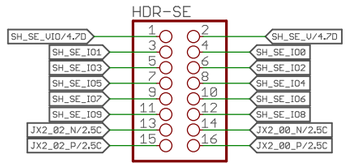

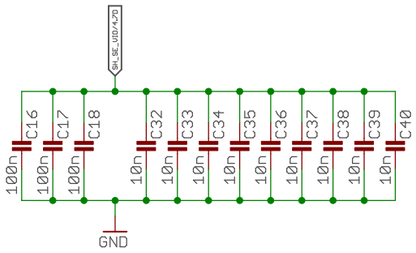

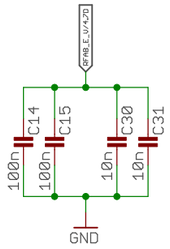

AXIOM Beta Main Board [Test]

Interface Fabric East

Copyright (C) 2015 H.Poetzl
Licensed under CERN OHL v.1.2

Sheet: