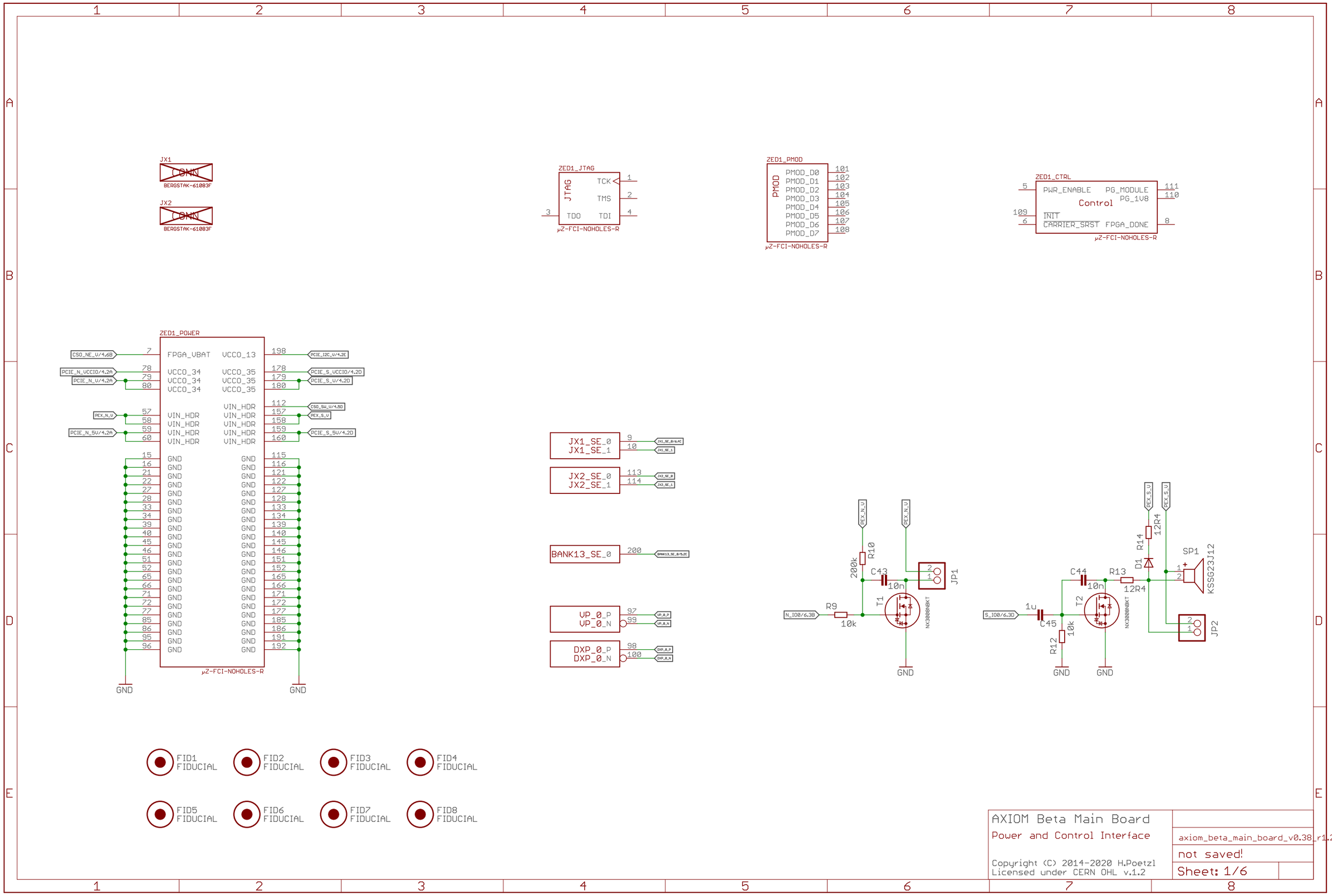


AXIOM Beta Main Board

Power and Control Interface

axiom_beta_main_board_v0.38_r1.2

not saved!

Sheet: 1/6

Copyright (C) 2014-2020 H.Poetzl
Licensed under CERN OHL v.1.2

AXIOM Beta Main Board

ZYNQ LVDS Interface

axiom_beta_main_board_v0.38_r1.2

not saved!

Sheet: 2/6

Copyright (C) 2014-2020 H.Poetzl
Licensed under CERN OHL v.1.2

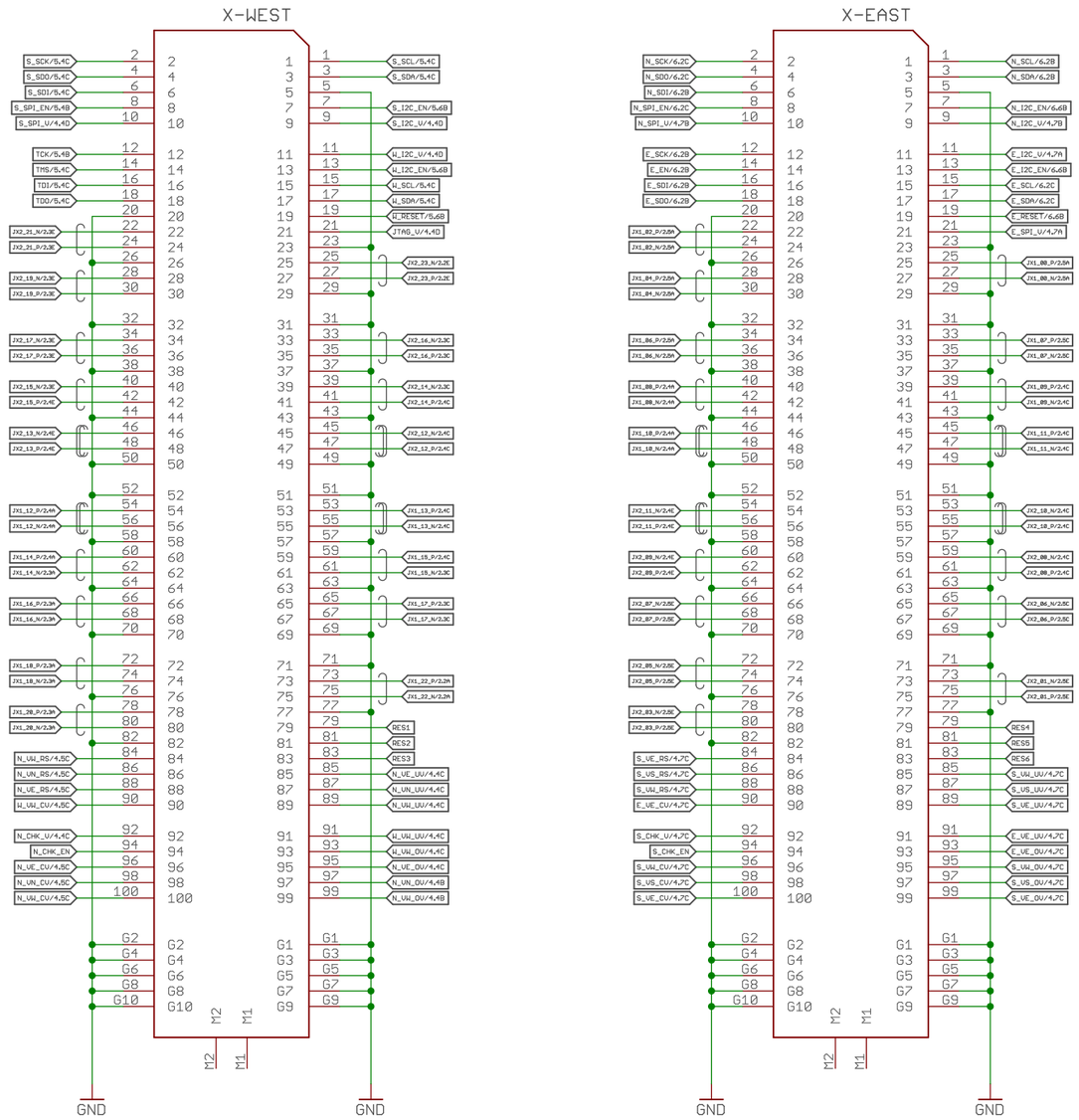


AXIOM Beta Main Board

Interface Board Connection

axiom_beta_main_board_v0.38_r1.2

not saved!

Sheet: 3/6

Copyright (C) 2014-2020 H.Poetzl
Licensed under CERN OHL v.1.2

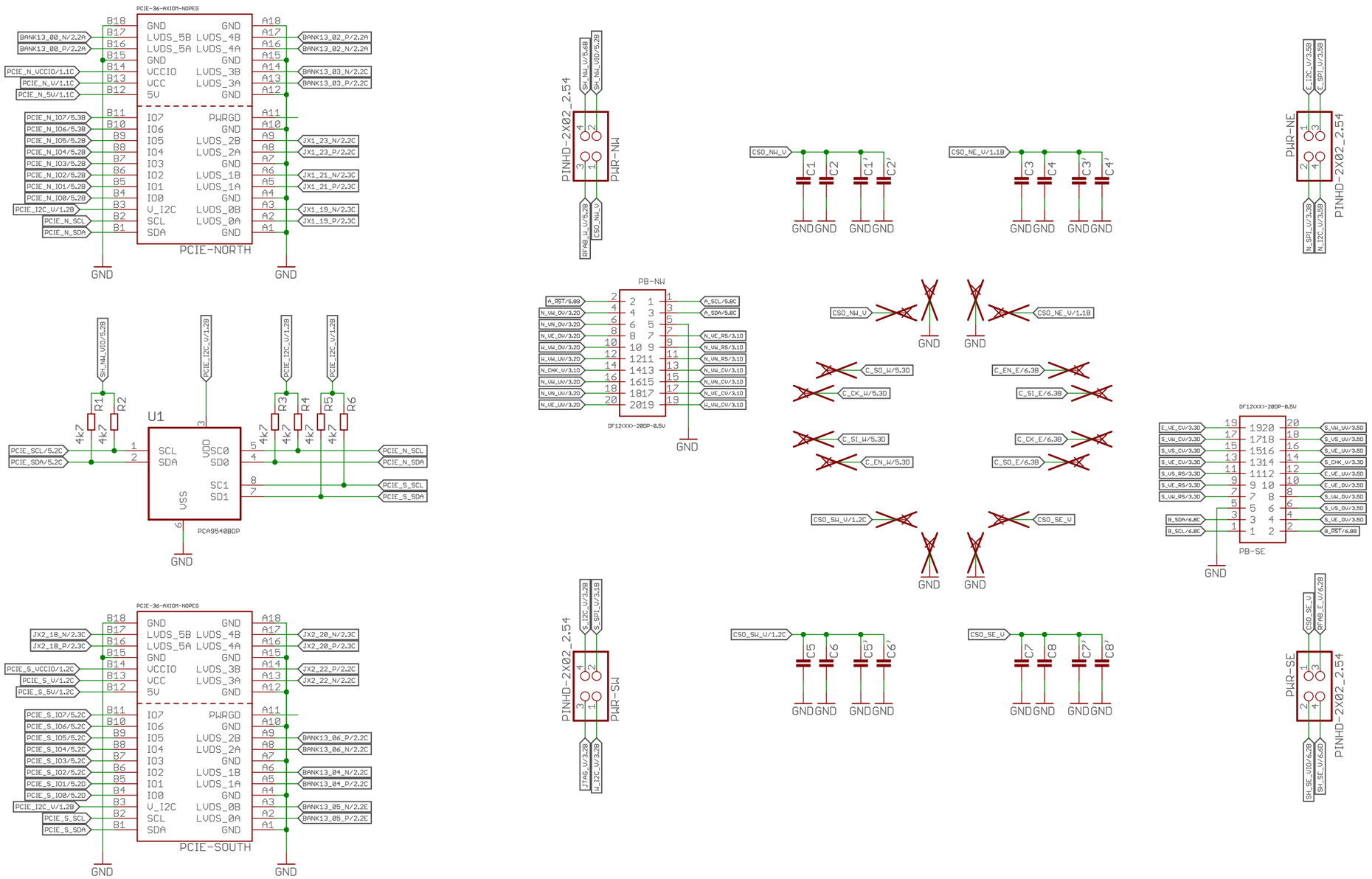


AXIOM Beta Main Board

PCIE, Power, Center Area

Copyright (C) 2015-2020 H.Poetzl
Licensed under CERN OHL v.1.2

axiom_beta_main_board_v0.38_r1.2

not saved!

Sheet: 4/6

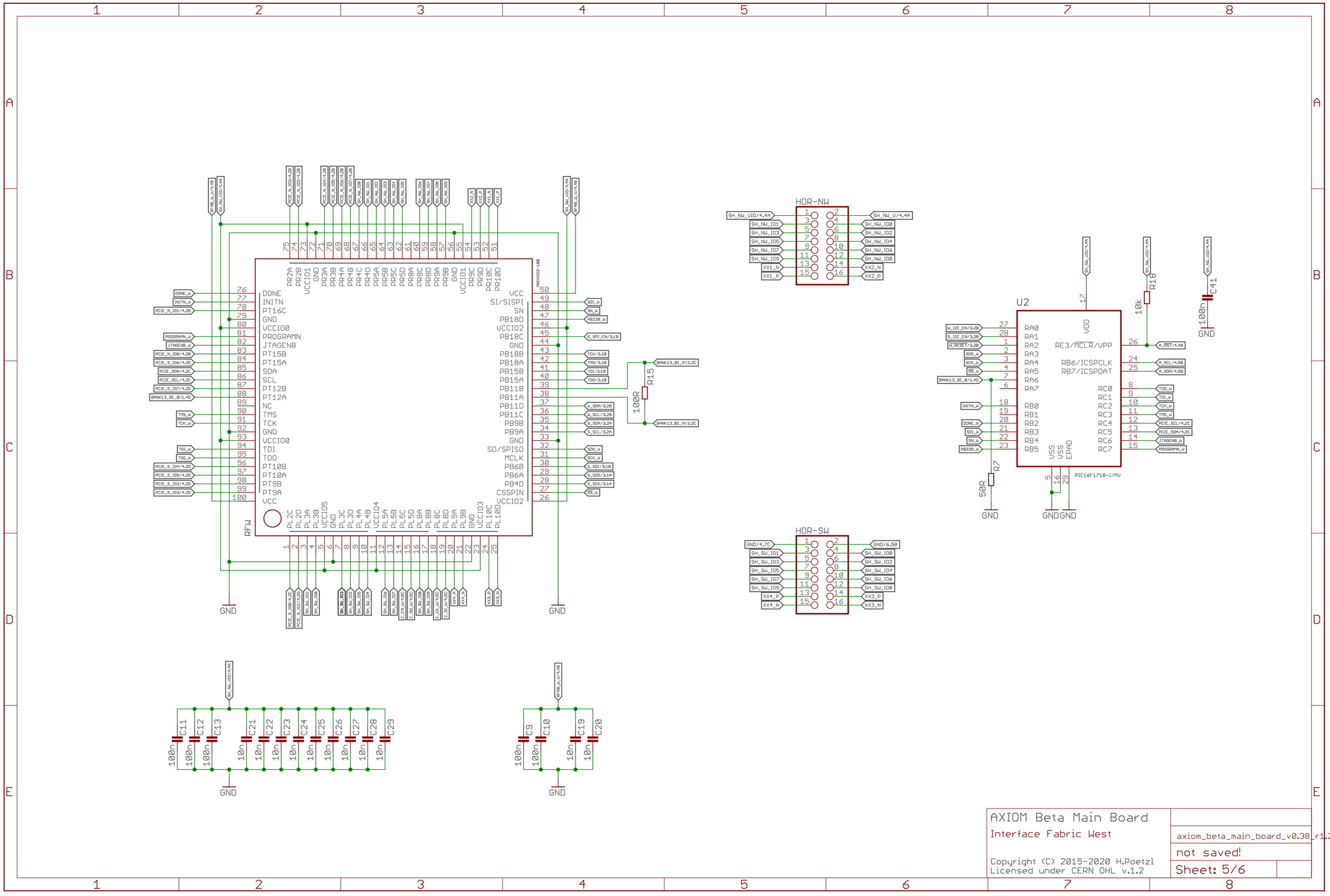


AXIOM Beta Main Board

Interface Fabric West

axiom_beta_main_board_v0.38_r1.2

not saved!

Sheet: 5/6

Copyright (C) 2015-2020 H.Poetzl
Licensed under CERN OHL v.1.2

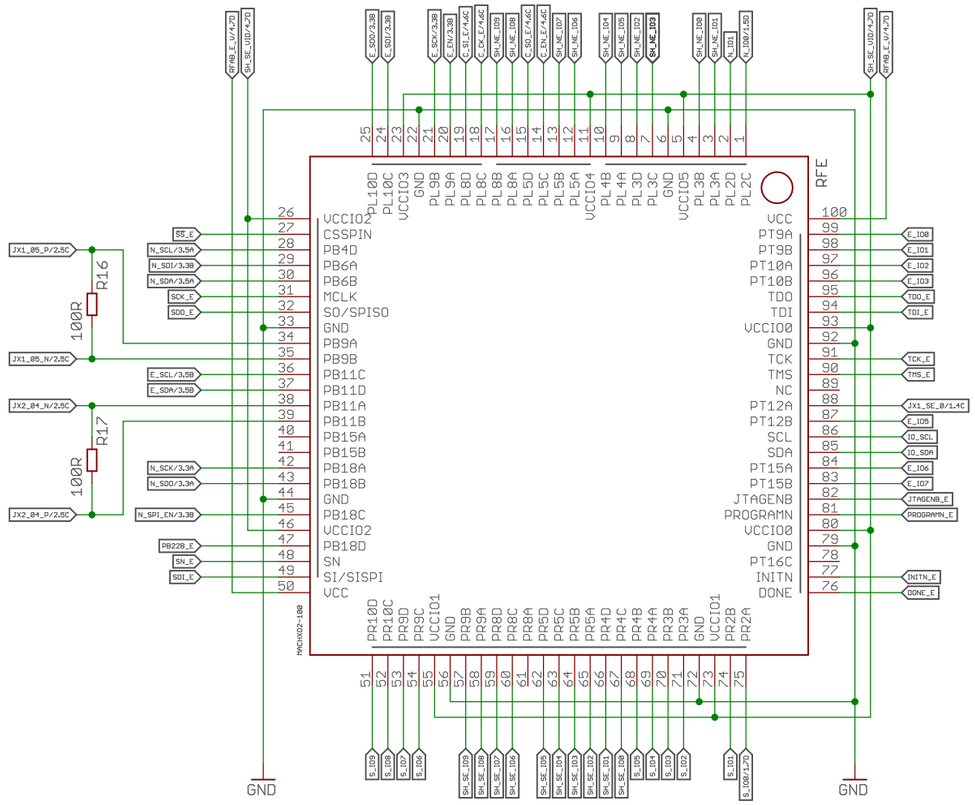


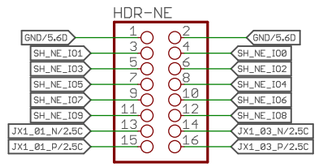


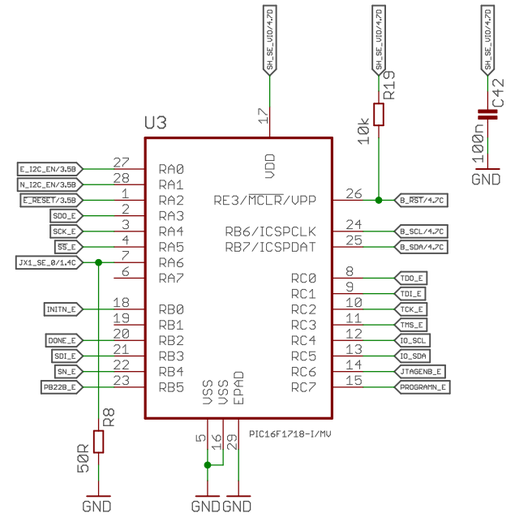


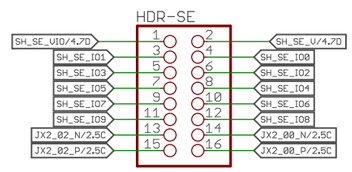


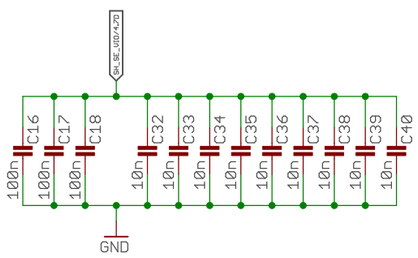


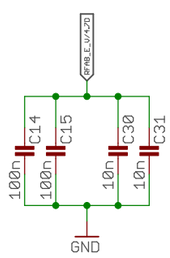


AXIOM Beta Main Board

Interface Fabric East

axiom_beta_main_board_v0.38_r1.2

not saved!

Sheet: 6/6

Copyright (C) 2015-2020 H.Poetzl
Licensed under CERN OHL v.1.2