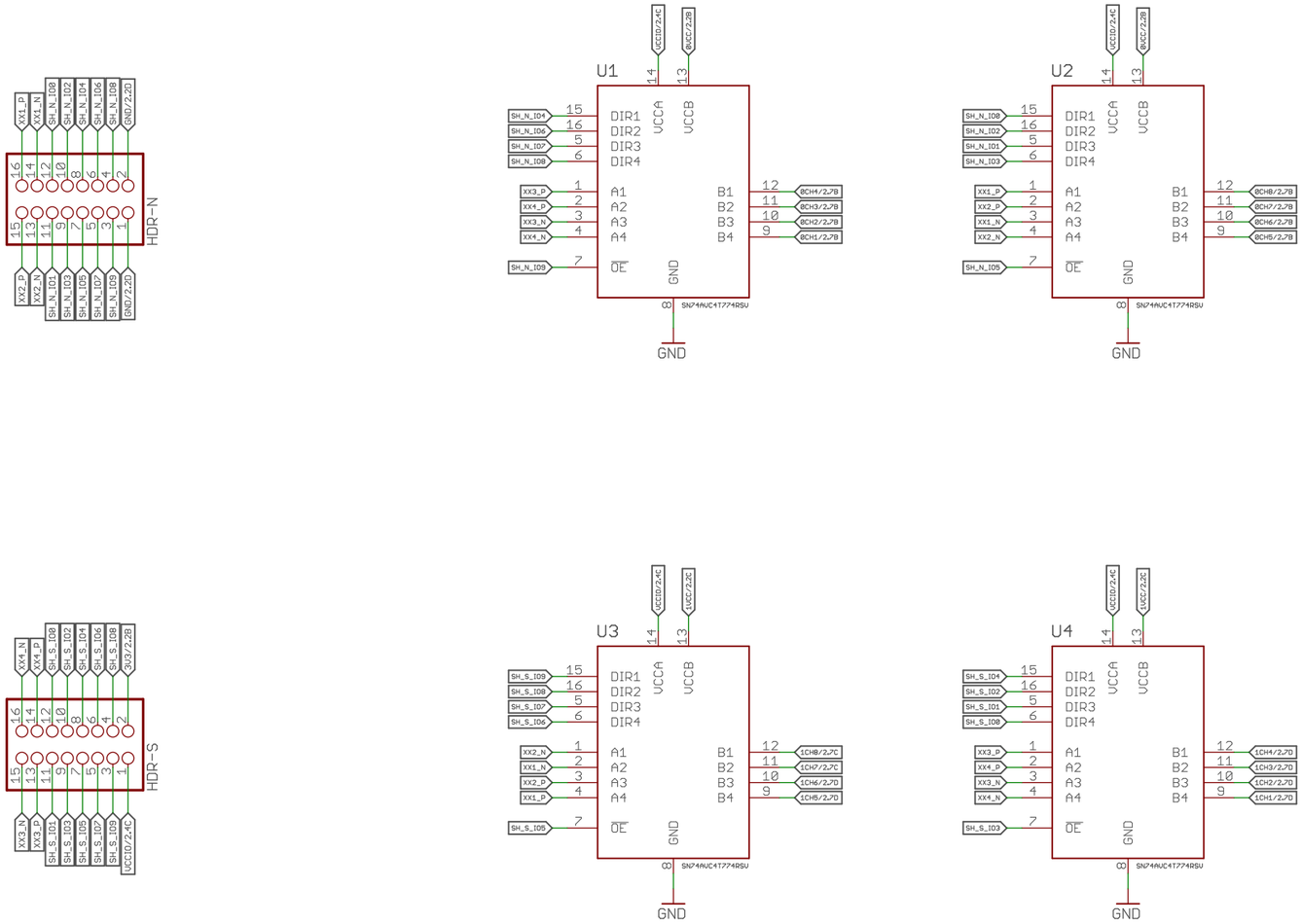

AXIOM Beta Shield

Level Conversion

Copyright (C) 2019 H.Poetzl
Licensed under CERN OHL v.1.2

Sheet:

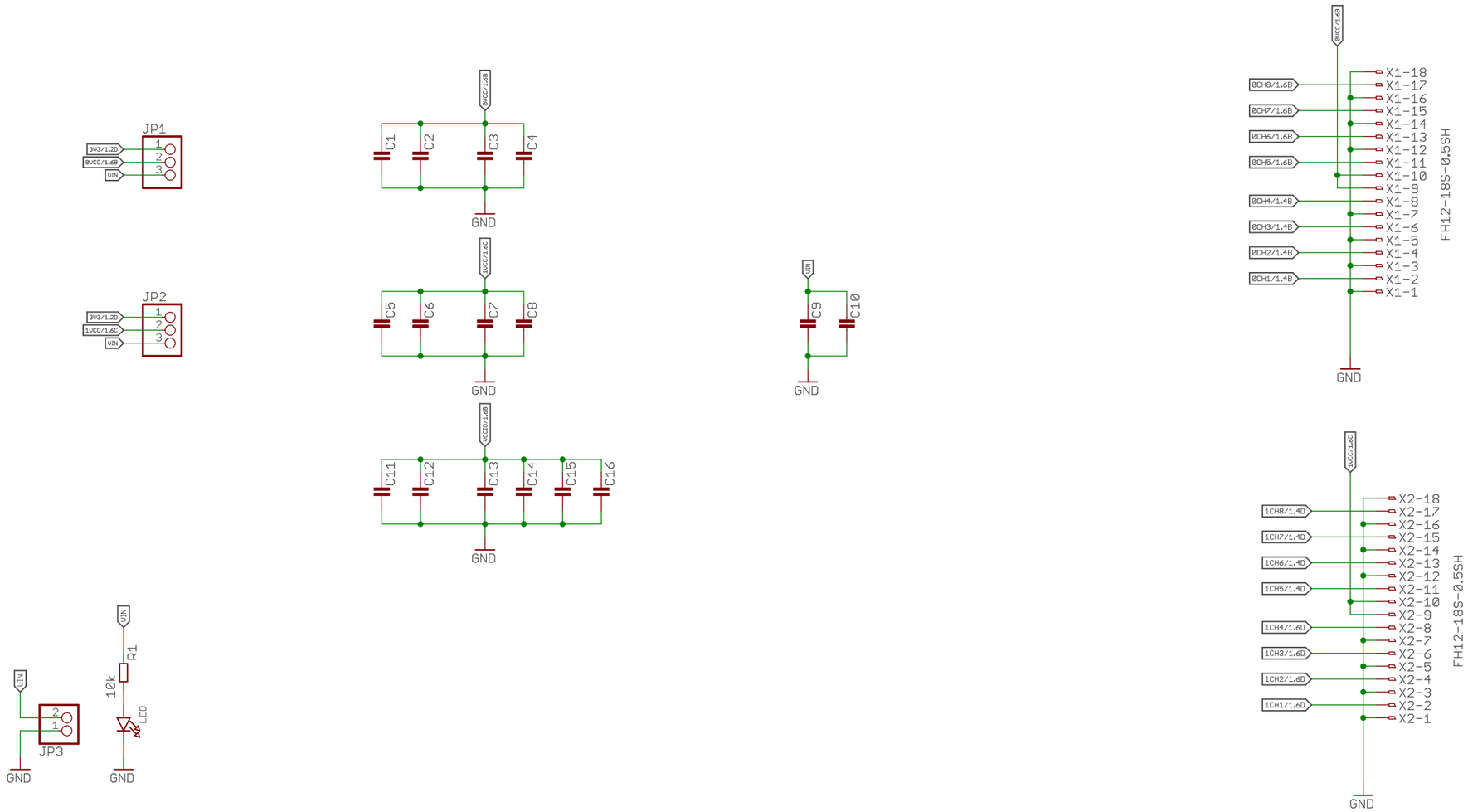

uSD Adapter Breakout

FPC Interface

Copyright (C) 2019 H.Poetzl
Licensed under CERN OHL v.1.2

axiom_beta_shield_genio_v0.3_r1.2

Sheet: 2/2