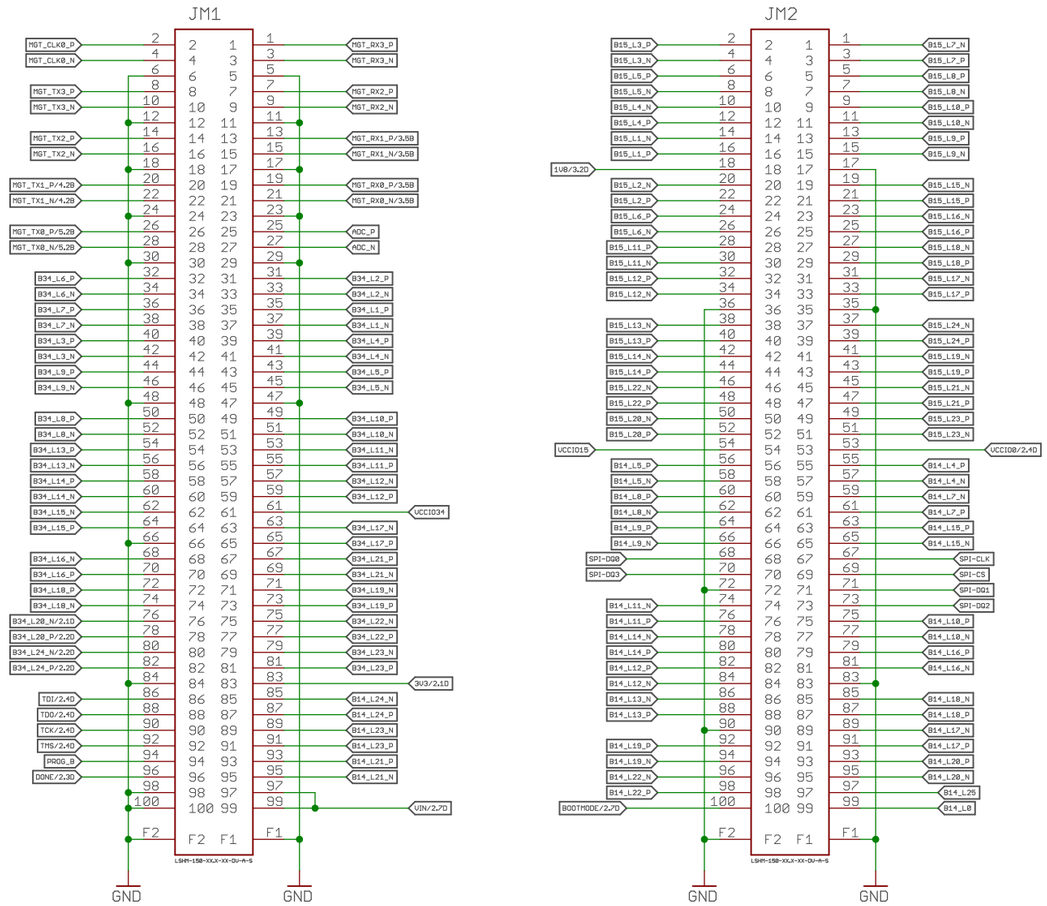

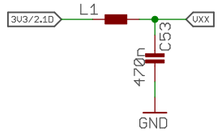

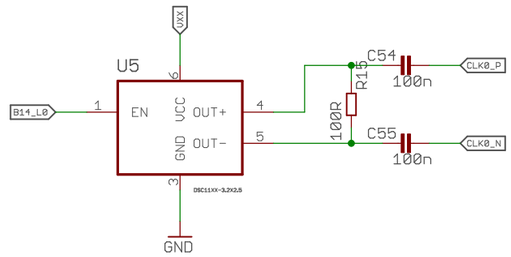

AXIOM Beta Module

Trenz SDI Plugin Module

axiom_beta_plugin_module_TE0714_SDI_v0.4

12/14/21 6:57 PM

Sheet: 1/5

Copyright (C) 2017 H.Poetzl
Licensed under CERN OHL v.1.2

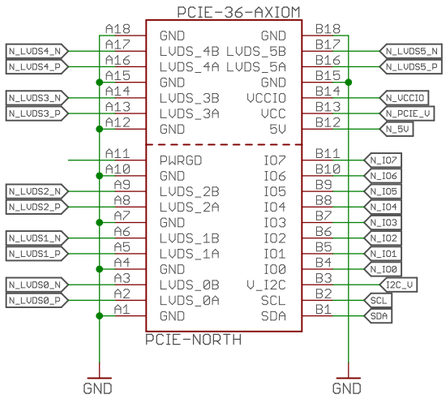

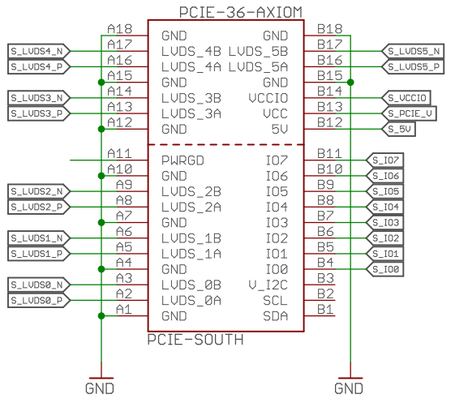

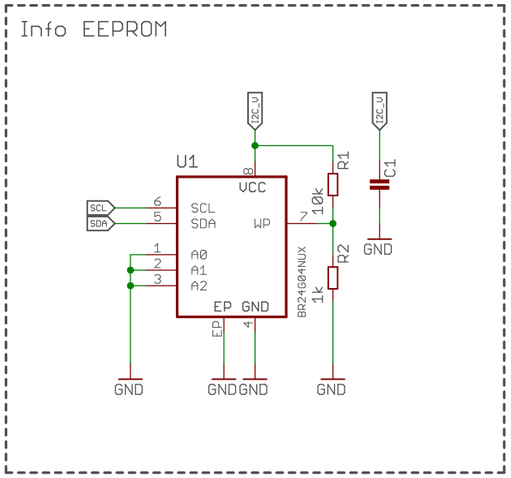

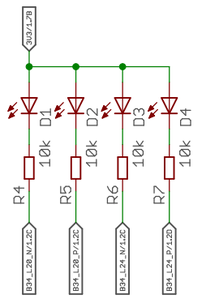

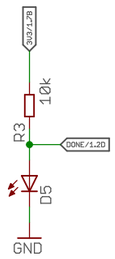

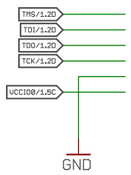

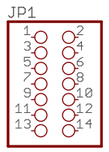

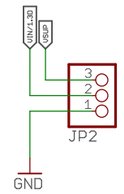

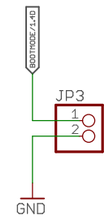

AXIOM Beta Module

Trenz SDI Plugin Module

Copyright (C) 2017 H.Poetzl
Licensed under CERN OHL v.1.2

axiom_beta_plugin_module_TE0714_SDI_v0.4

12/14/21 6:57 PM

Sheet: 2/5

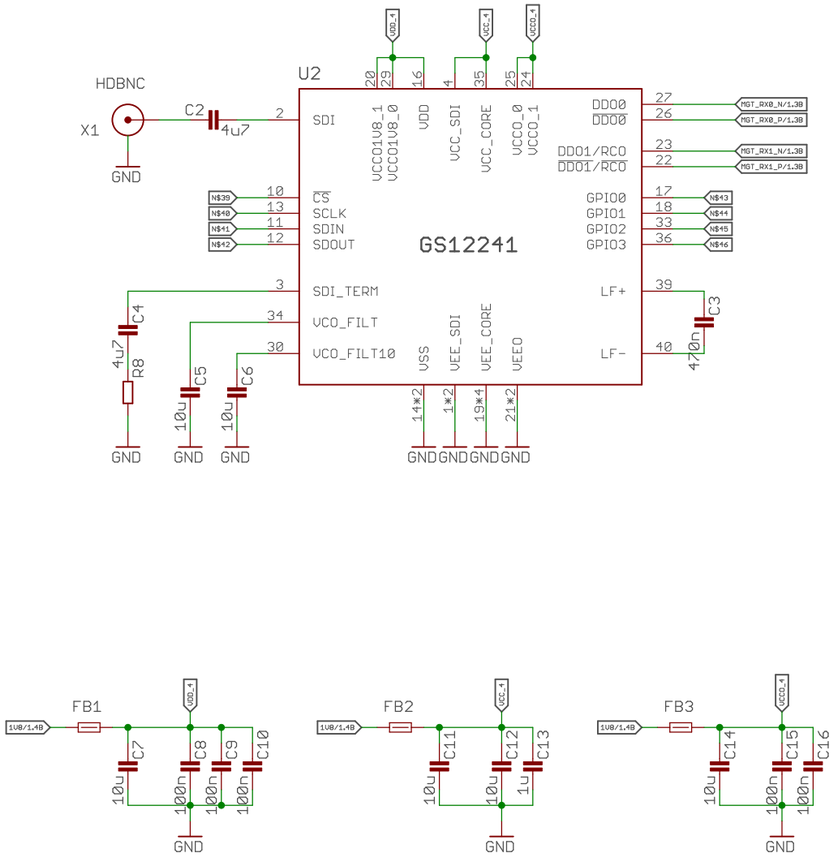

AXIOM Beta Module

Trenz SDI Plugin Module

axiom_beta_plugin_module_TE0714_SDI_v0.4

12/14/21 6:57 PM

Sheet: 3/5

Copyright (C) 2017 H.Poetzl
Licensed under CERN OHL v.1.2

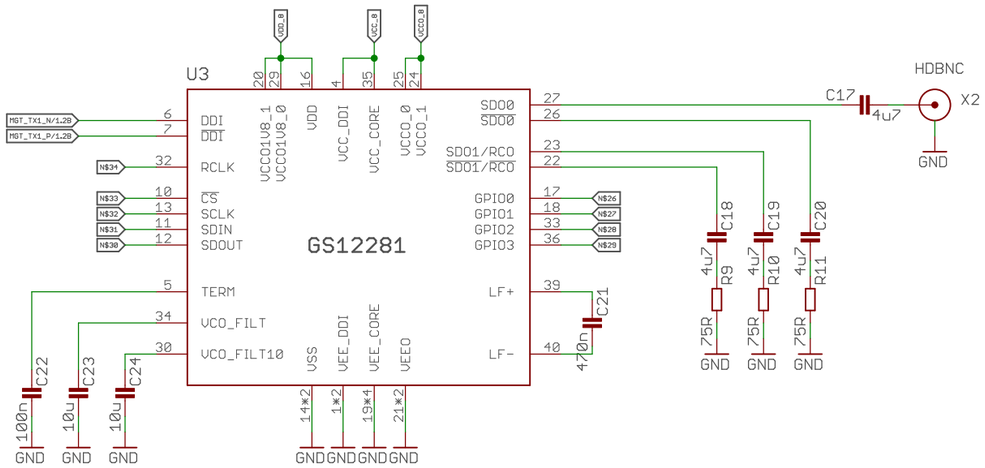

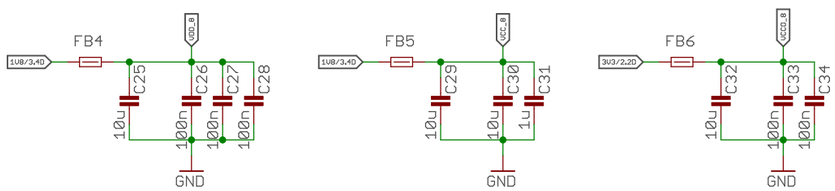

AXIOM Beta Module

Trenz SDI Plugin Module

axiom_beta_plugin_module_TE0714_SDI_v0.4

12/14/21 6:57 PM

Sheet: 4/5

Copyright (C) 2017 H.Poetzl
Licensed under CERN OHL v.1.2

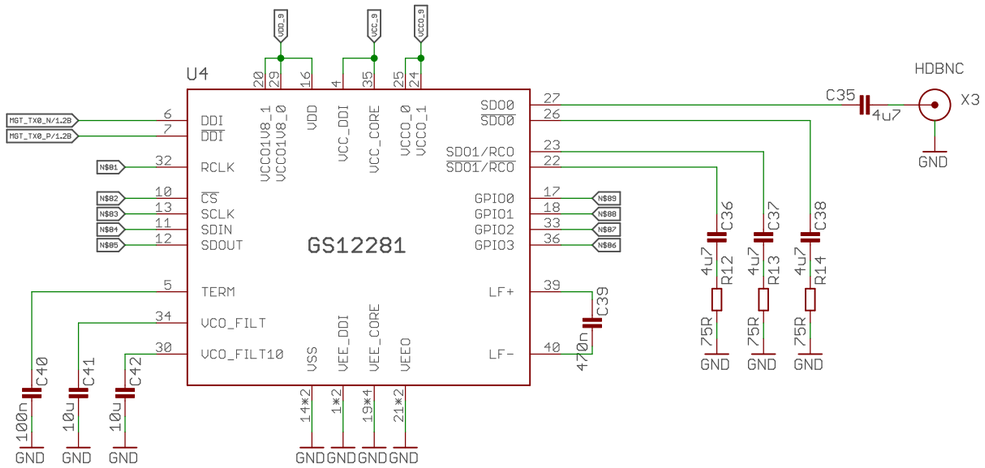

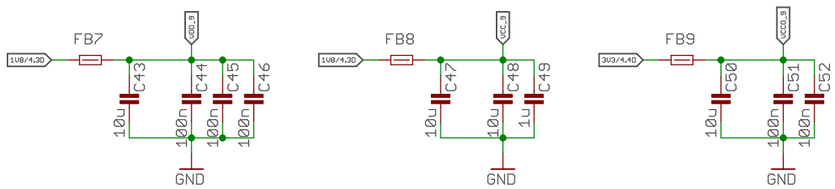

AXIOM Beta Module

Trenz SDI Plugin Module

axiom_beta_plugin_module_TE0714_SDI_v0.4

12/14/21 6:57 PM

Sheet: 5/5

Copyright (C) 2017 H.Poetzl
Licensed under CERN OHL v.1.2