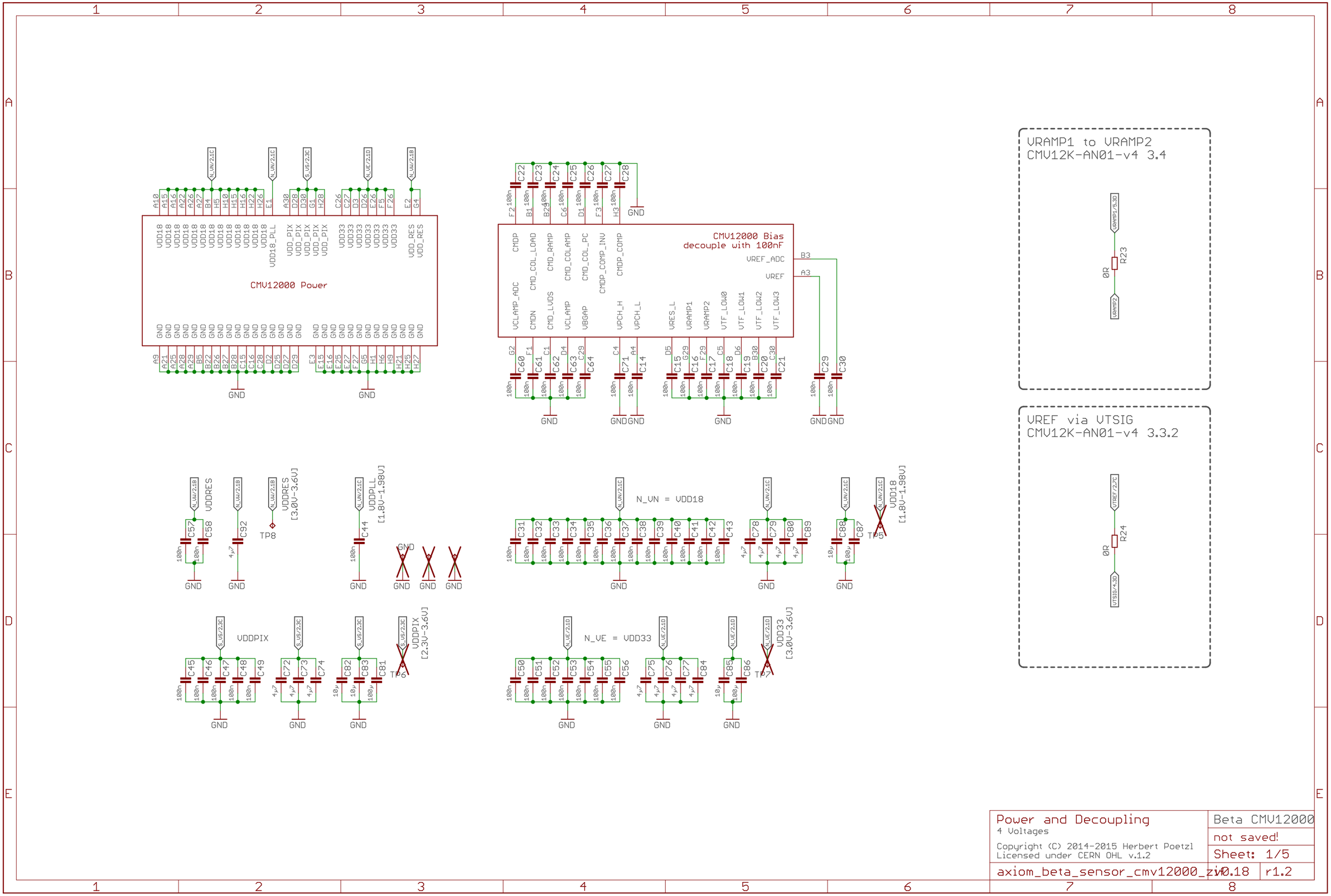

Power and Decoupling
4 Voltages

Copyright (C) 2014-2015 Herbert Poetzl
Licensed under CERN OHL v.1.2

Beta CMV12000
not saved!
Sheet: 1/5
axiom_beta_sensor_cmv12000_zi v0.18 r1.2

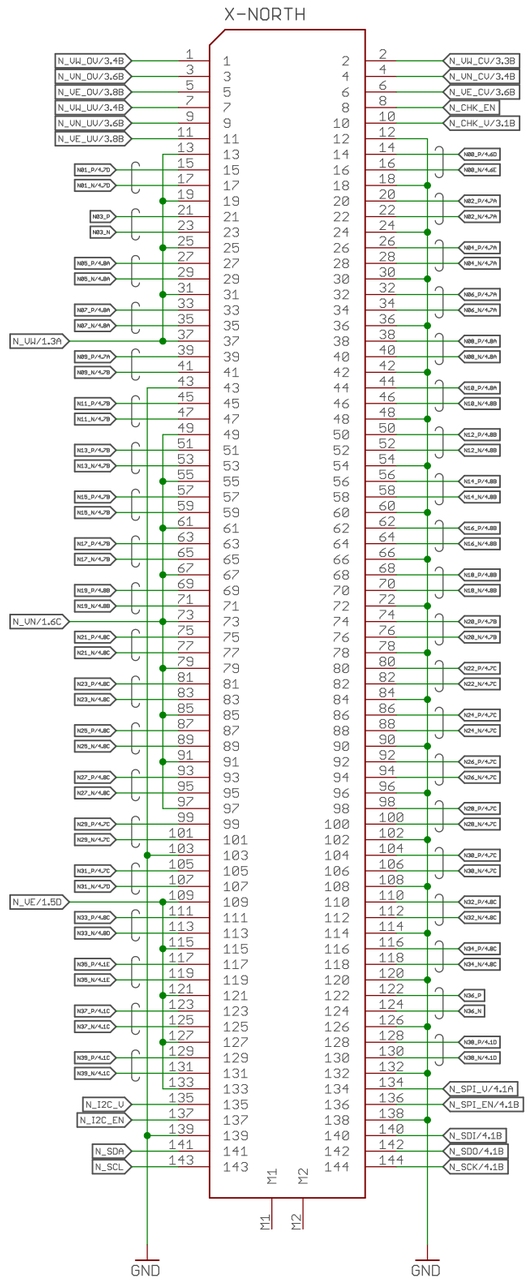

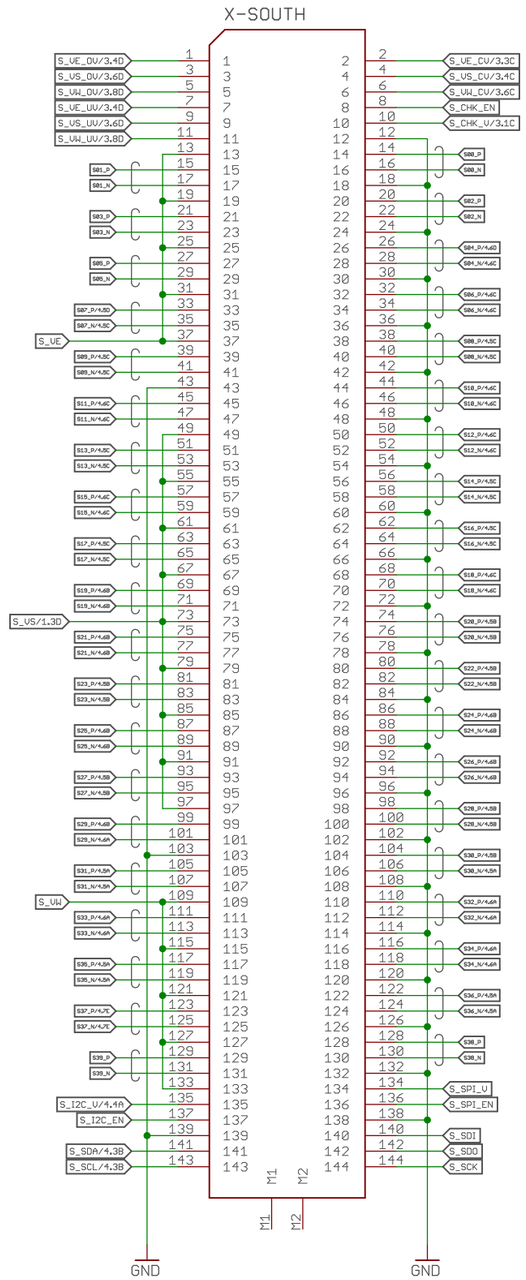

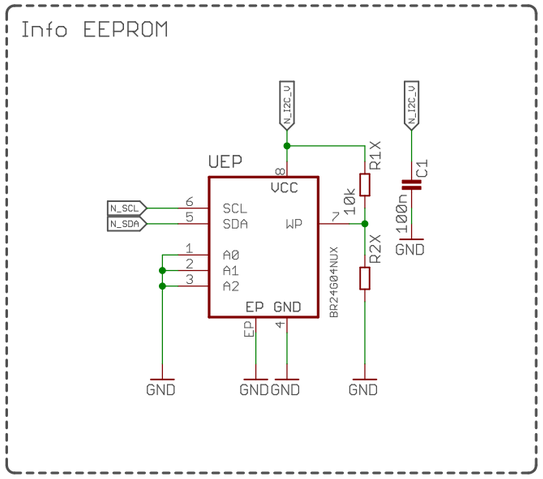

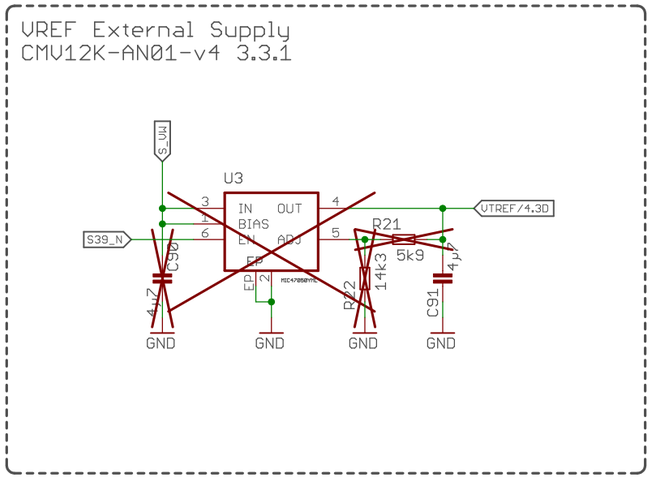

Interface, Info and VREF
Optional VREF Supply

Copyright (C) 2014-2015 Herbert Poetzl
Licensed under CERN OHL v.1.2

Beta CMV12000	
not saved!	
Sheet: 2/5	
axiom_beta_sensor_cmv12000_ziv0.18	r1.2

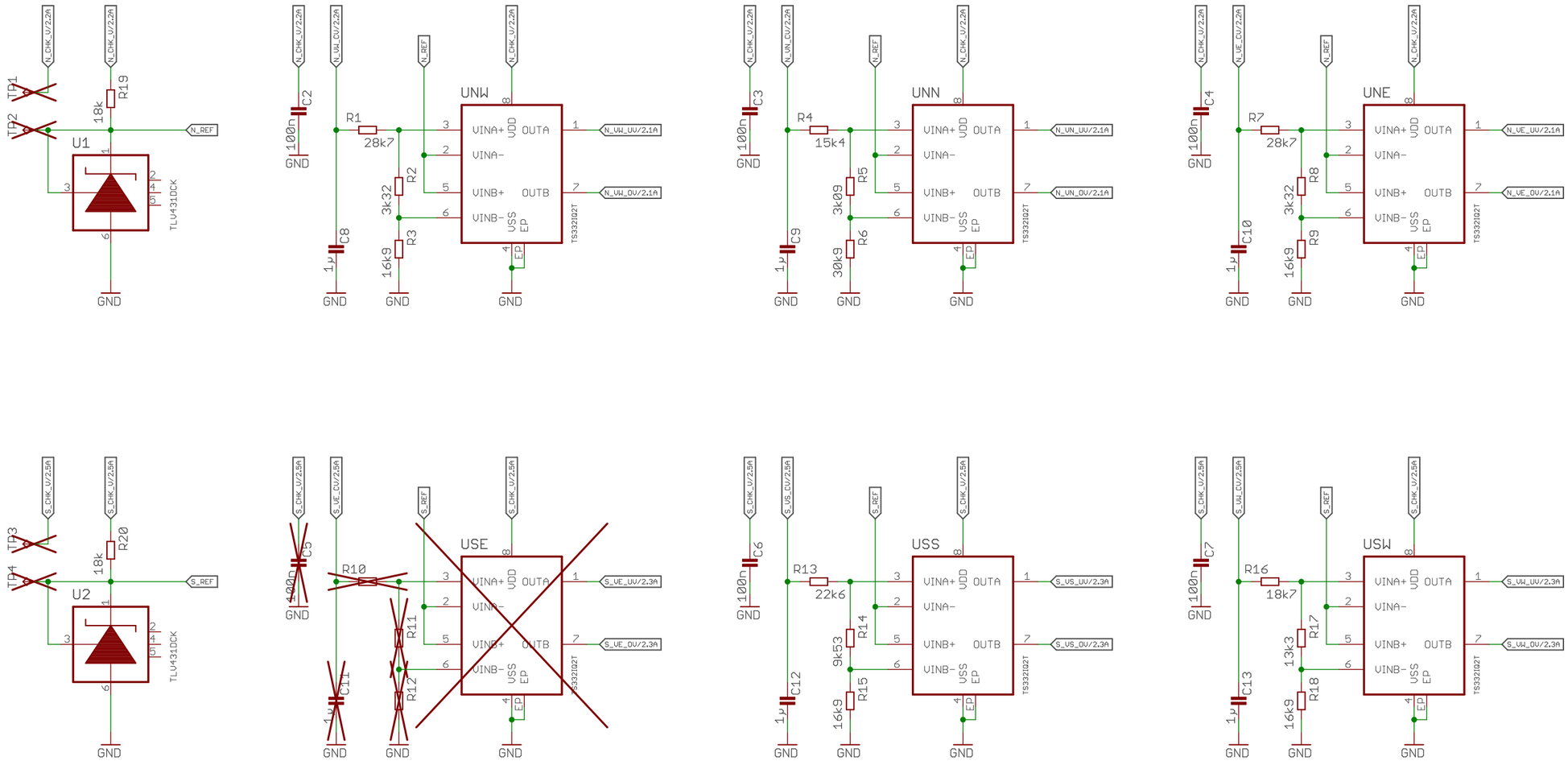

Over/Under Voltage Check 4 Voltages	Beta CMV12000
Copyright (C) 2014-2015 Herbert Poetzl Licensed under CERN OHL v.1.2	not saved!
	Sheet: 3/5
axiom_beta_sensor_cmv12000_ziv	v0.18 r1.2

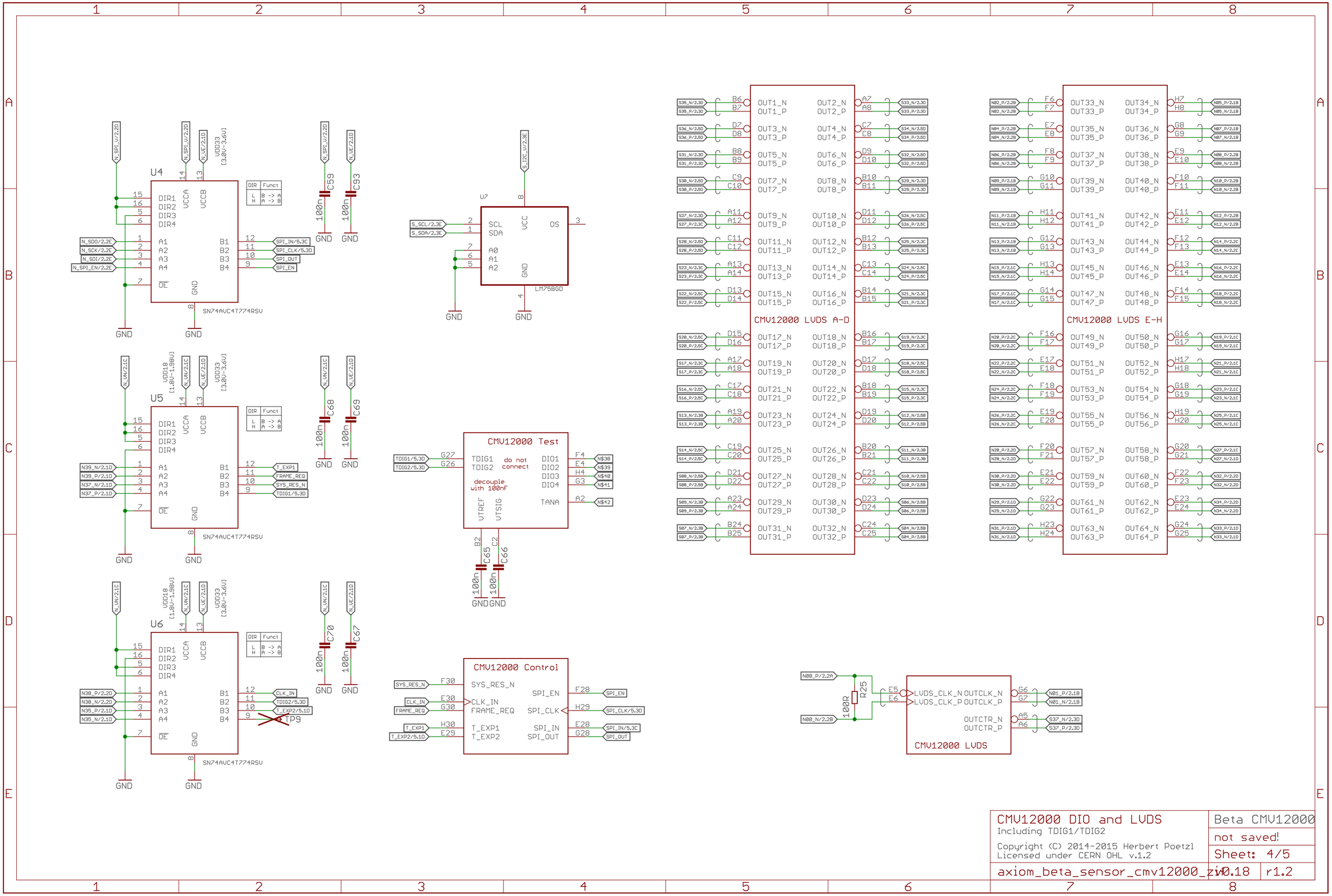
U4
SN74AVC4T774RSV
U5
SN74AVC4T774RSV
U6
SN74AVC4T774RSV
U7
LM75BGD
CMV12000 Test
CMV12000 Control
CMV12000 LVDS A-D
CMV12000 LVDS E-H
CMV12000 LVDS
R25
100R
TP9
GND
CMV12000 DIO and LVDS
Including TDIG1/TDIG2
Copyright (C) 2014-2015 Herbert Poetzl
Licensed under CERN OHL v.1.2
Beta CMV12000
not saved!
Sheet: 4/5
axiom_beta_sensor_cmv12000_zi
v0.18
r1.2

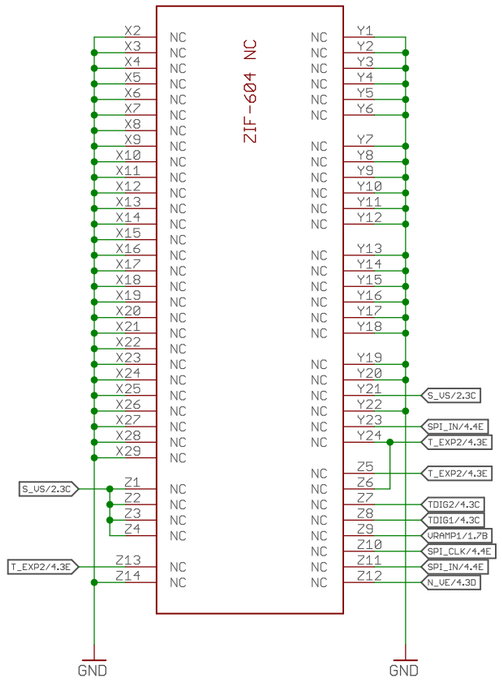

ZIF Unused Pins

Copyright (C) 2014-2015 Herbert Poetzl
Licensed under CERN OHL v.1.2

Beta CMV12000	
not saved!	
Sheet: 5/5	
axiom_beta_sensor_cmv12000_zif	v0.18 r1.2