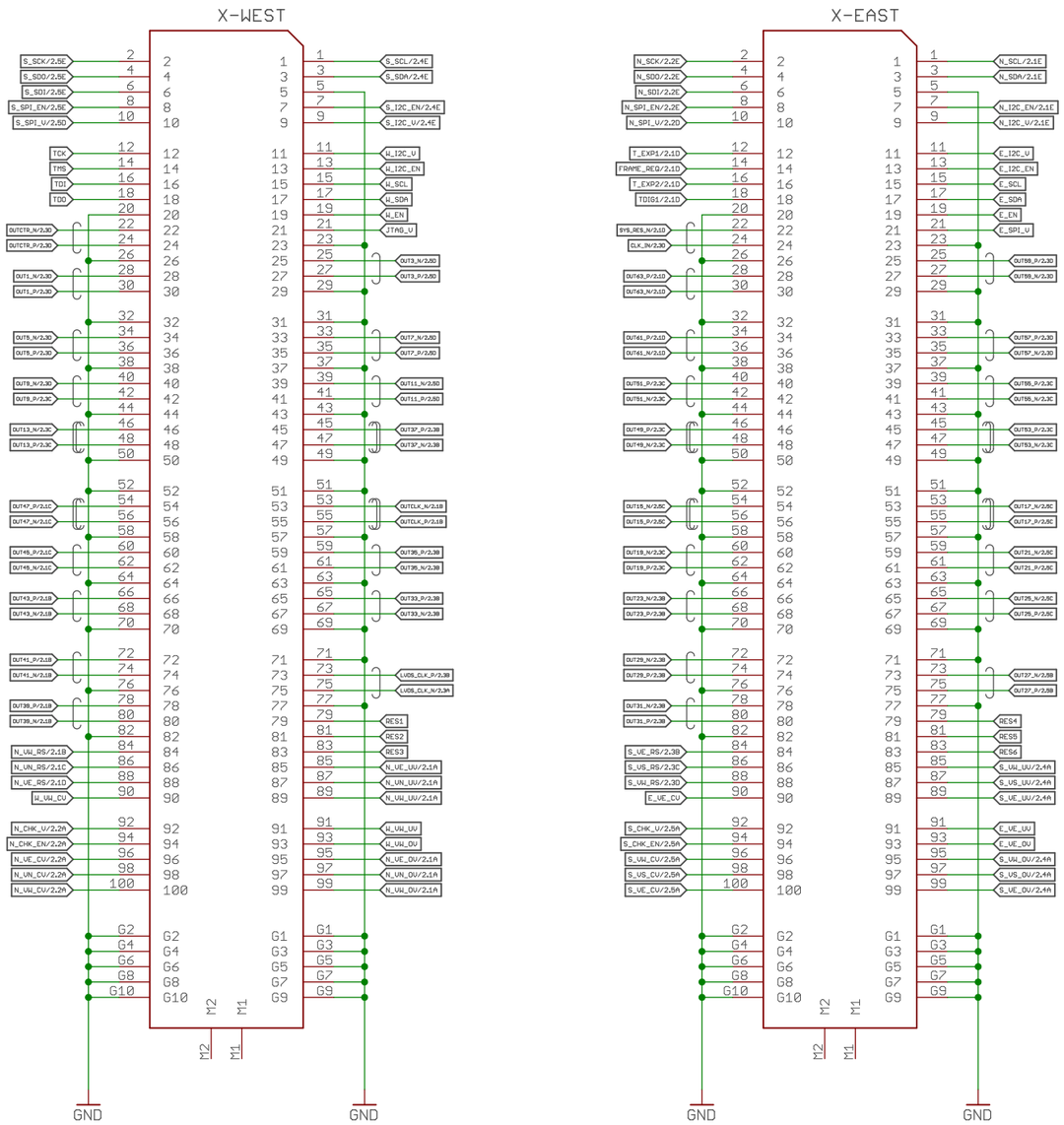

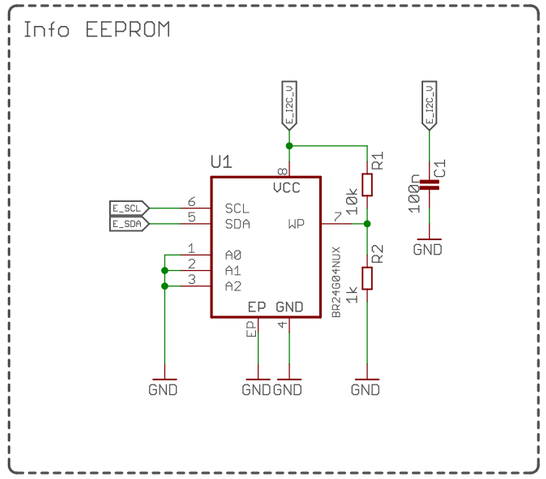

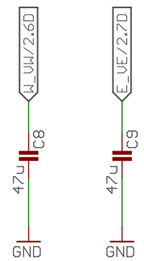

AXIOM Beta Dummy Interface

Beta Board Interface

E_SPI_U assumed equal to LVDS

Copyright (C) 2014-2015 Herbert Poetzl
Licensed under CERN OHL v.1.2

axiom_beta_interface_dummy_v0.13_r1.1

not saved!

Sheet: 1/2

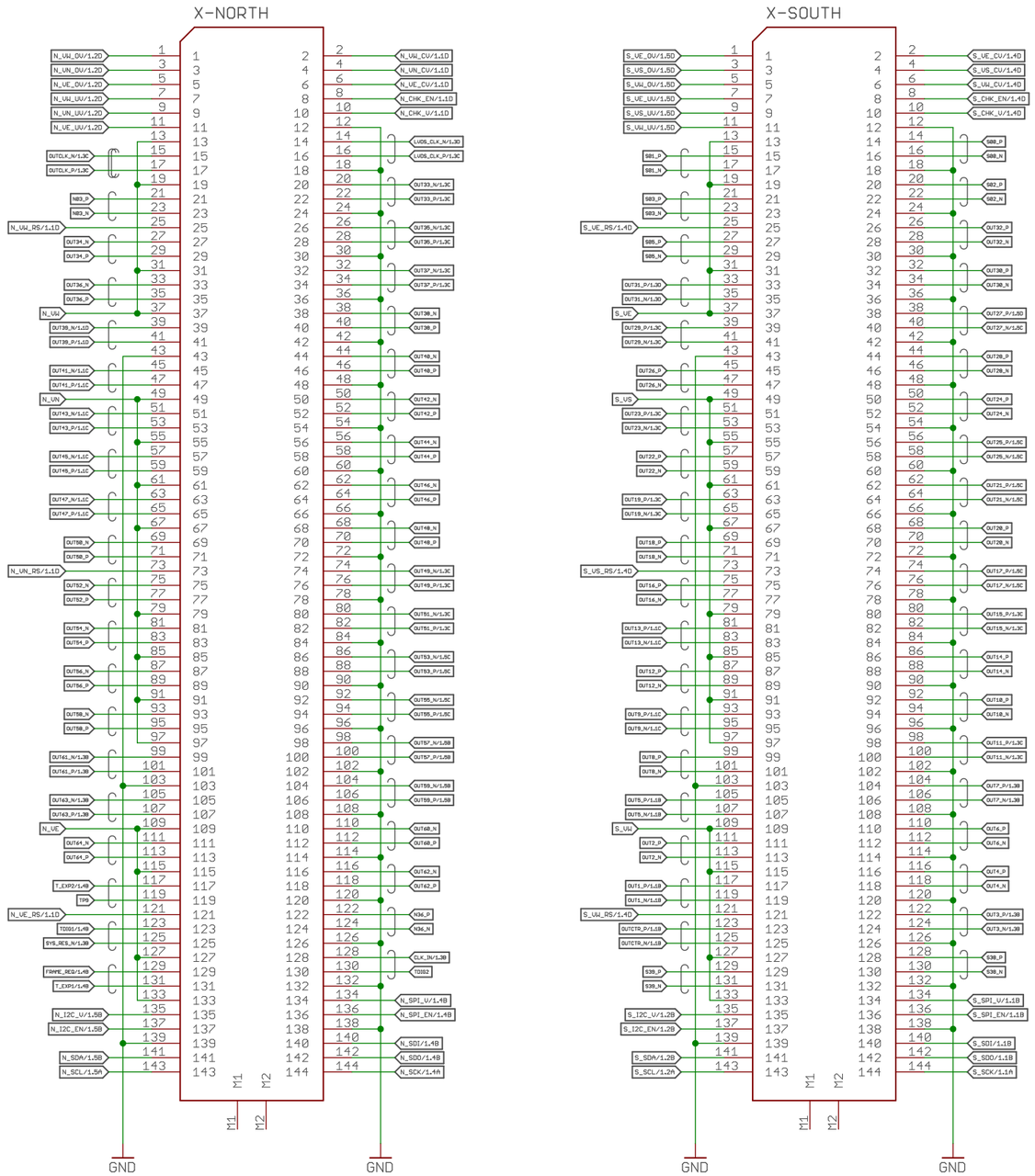

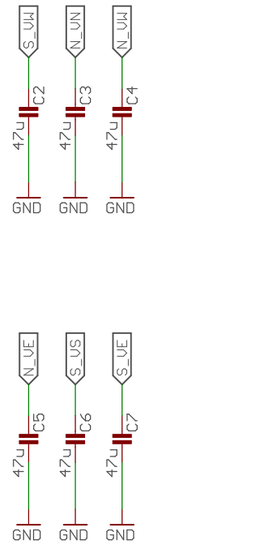

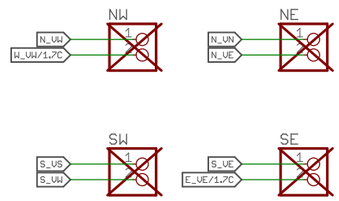

AXIOM Beta Dummy Interface

CMV12000 Interface

32 LVDS channels (16/16) connected

axiom_beta_interface_dummy_v0.13_r1.1

not saved!

Sheet: 2/2

Copyright (C) 2014-2015 Herbert Poetzl
Licensed under CERN OHL v.1.2