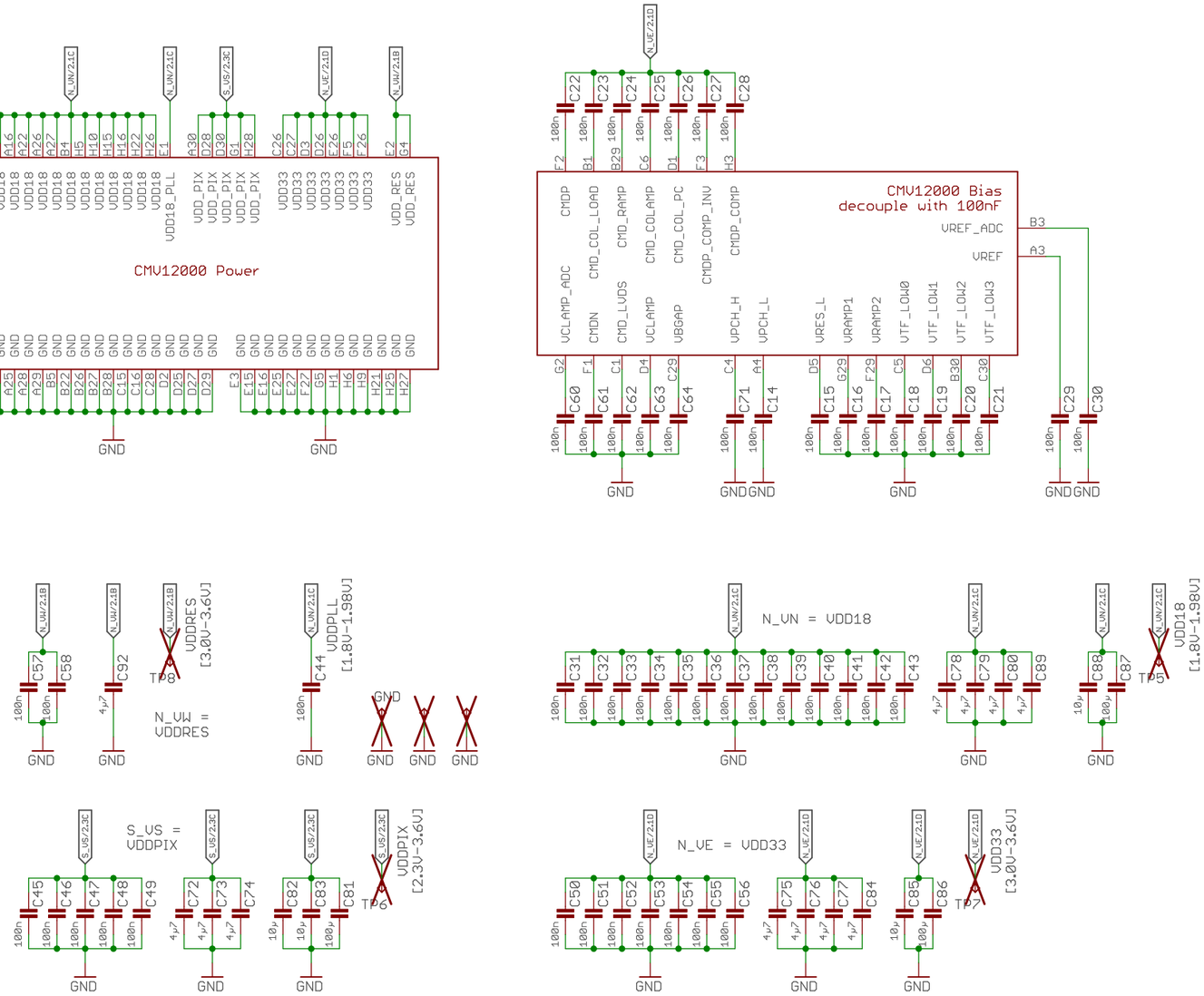

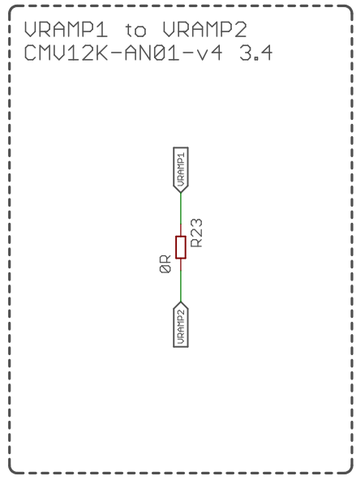

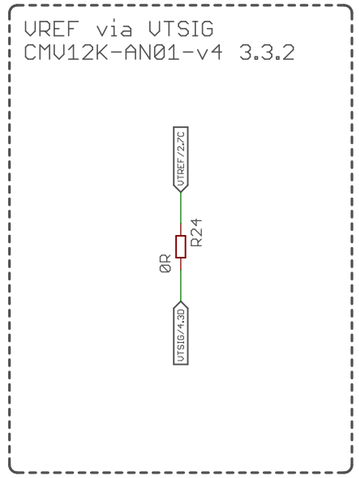

AXIOM Beta CMV12000

Power and Decoupling

4 Voltages

Copyright (C) 2014-2015 Herbert Poetzl
Licensed under CERN OHL v.1.2

axiom_beta_sensor_cmv12000_thr_v0.16_r1.4c

not saved!

Sheet: 1/4

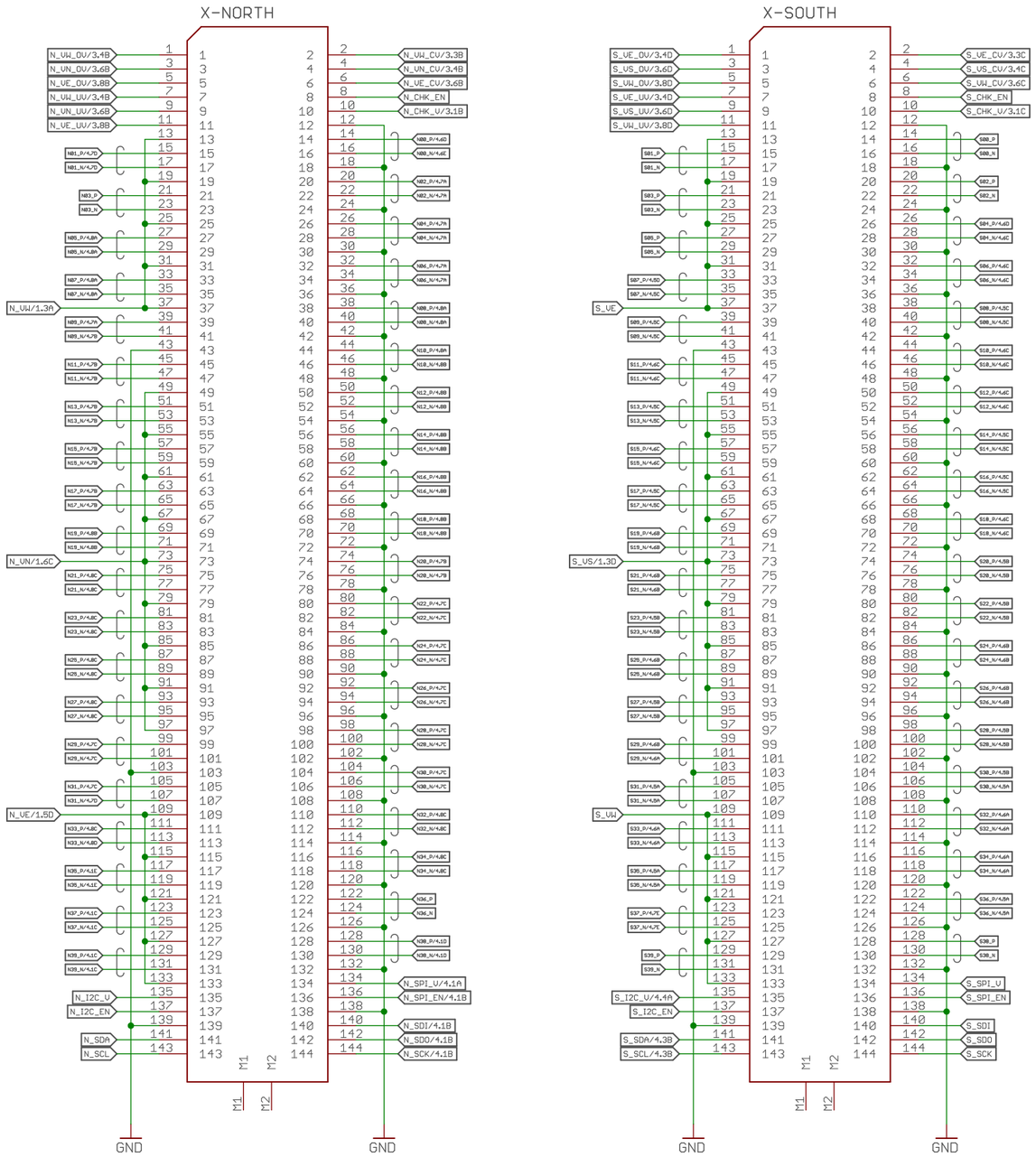

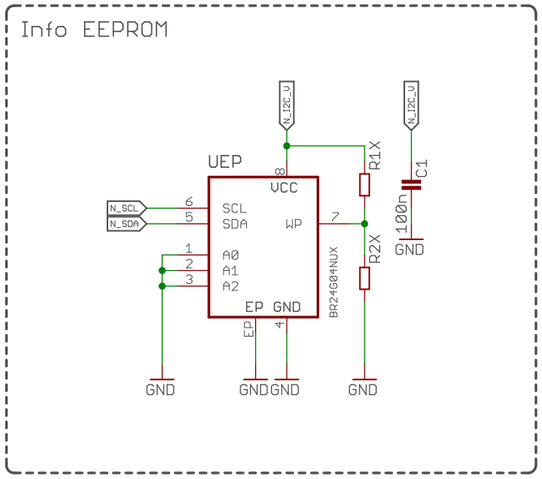

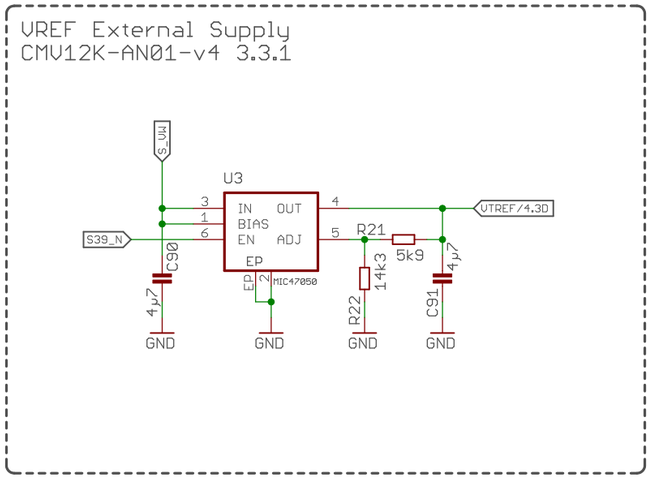

AXIOM Beta CMV12000

Interface, Info and VREF

Optional VREF Supply

Copyright (C) 2014-2015 Herbert Poetzl
Licensed under CERN OHL v.1.2

axiom_beta_sensor_cmv12000_thr_v0.16_r1.4c

not saved!

Sheet: 2/4

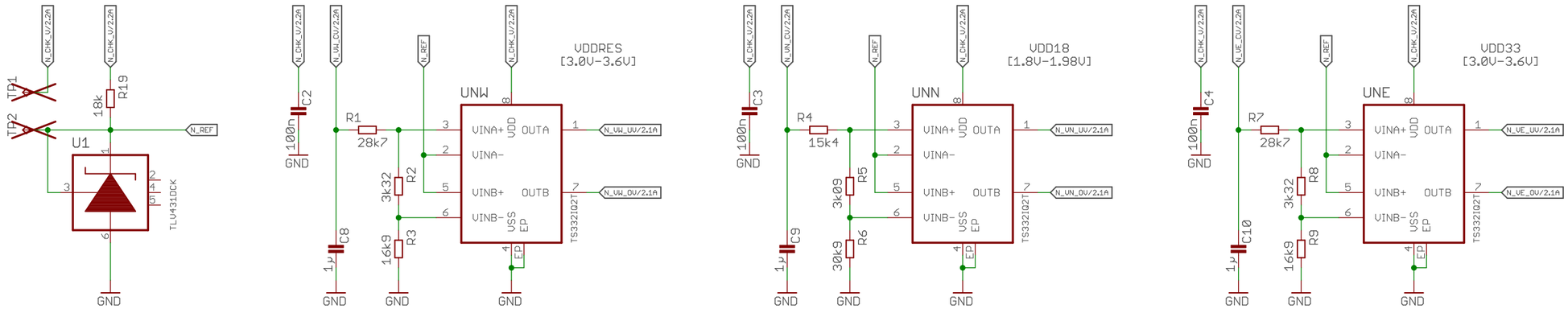

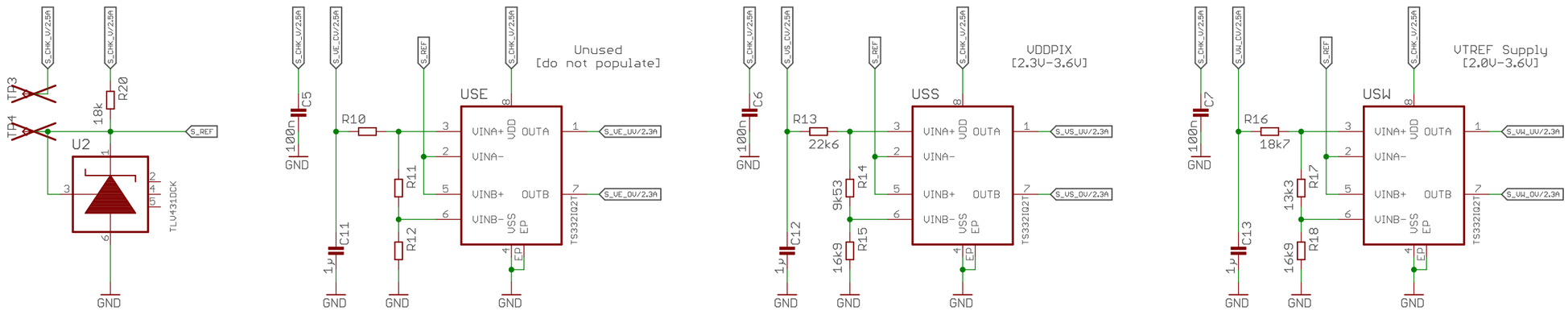

AXIOM Beta CMV12000

Over/Under Voltage Check

4/5 Voltages

axiom_beta_sensor_cmv12000_tht_v0.16_r1.4c

not saved!

Copyright (C) 2014-2015 Herbert Poetzl
Licensed under CERN OHL v.1.2

Sheet: 3/4

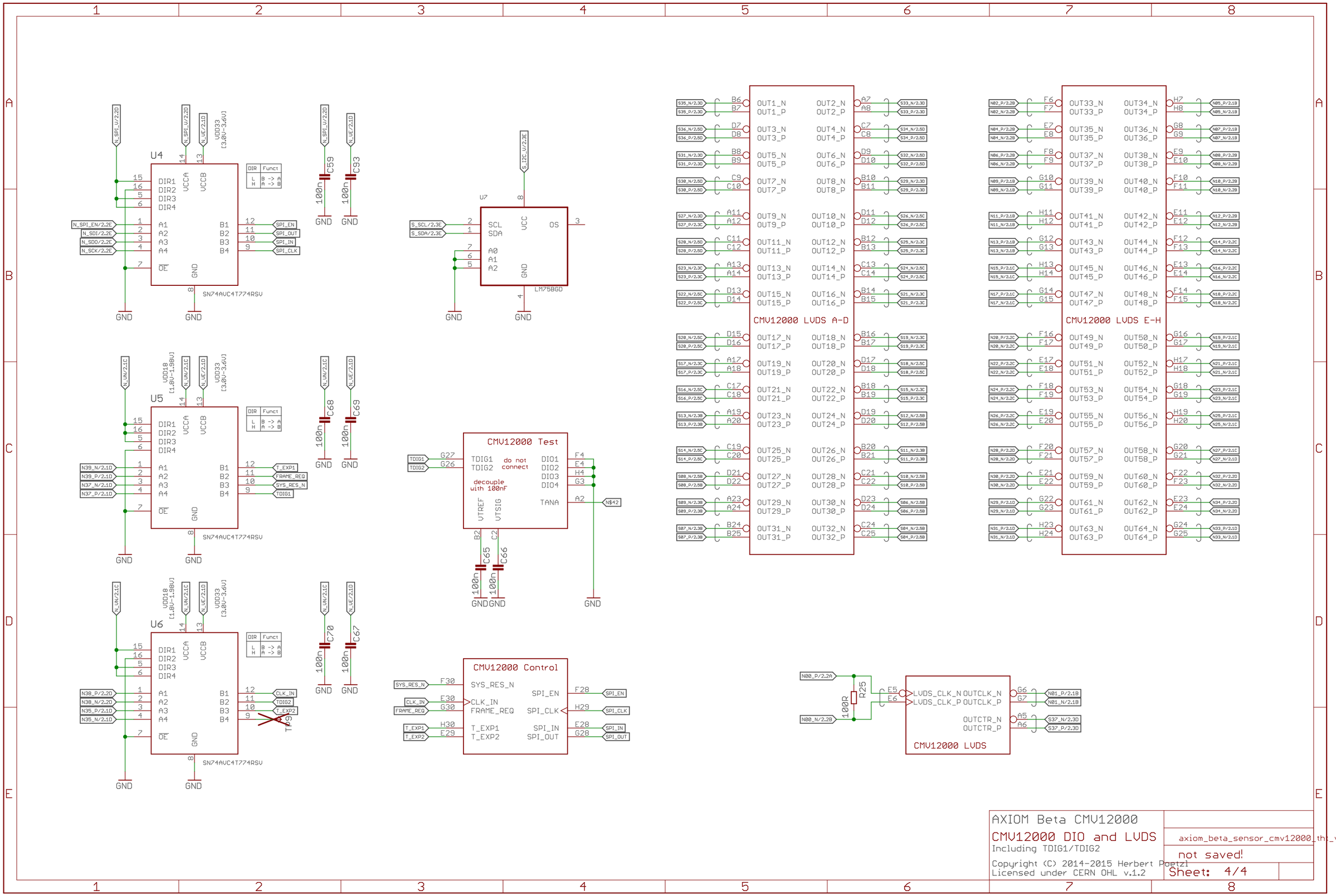

Copyright (C) 2014-2015 Herbert Poetzl
Licensed under CERN OHL v.1.2