F1
FIDUCIAL

F2
FIDUCIAL

F3
FIDUCIAL

F4
FIDUCIAL

F5
FIDUCIAL

F6
FIDUCIAL

F7
FIDUCIAL

F8
FIDUCIAL

OSHW
LOGO

AXIOM Beta Power Board

Overview

axiom_beta_power_board_v1.25

12/14/21 6:59 PM

Copyright (C) 2014-2017 H.Poetzl
Licensed under CERN OHL v.1.2

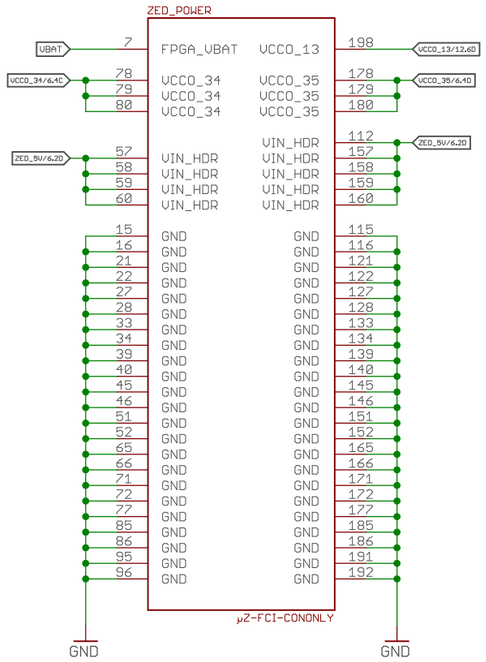

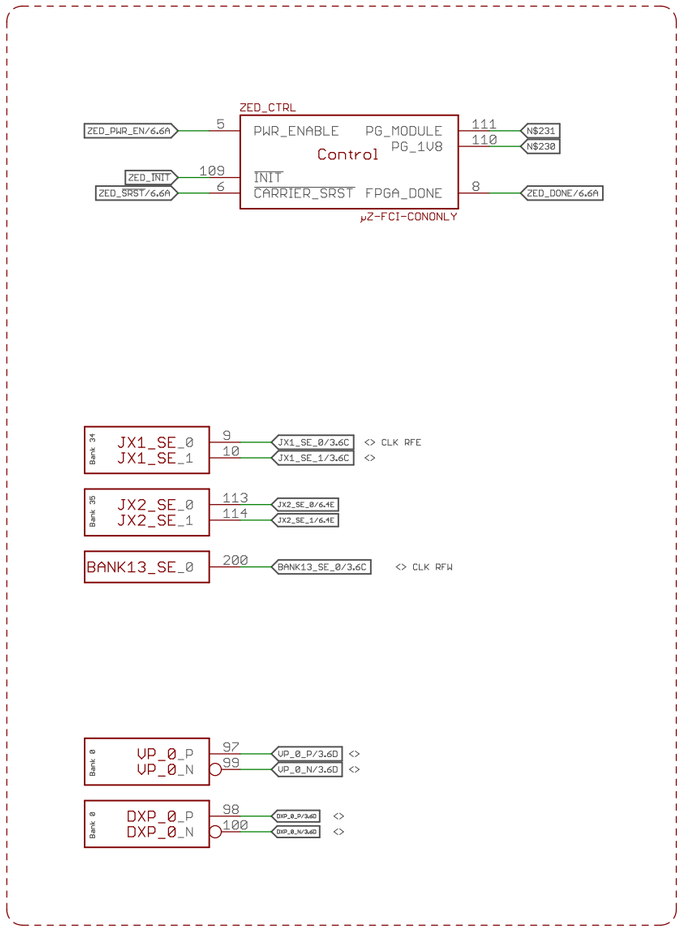

AXIOM Beta Power Board

MicroZed Power

axiom_beta_power_board_v1.25

12/14/21 6:59 PM

Copyright (C) 2014-2017 H.Poetzl
Licensed under CERN OHL v.1.2

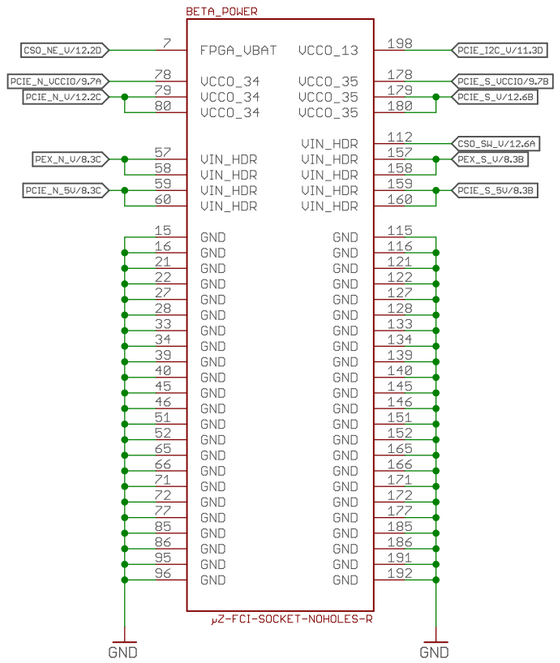

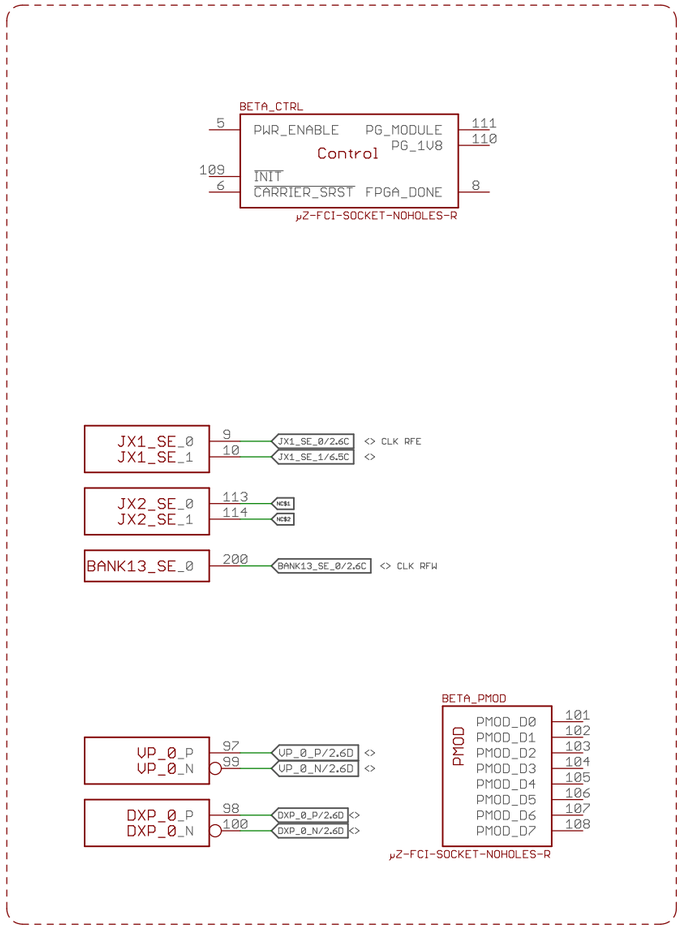

AXIOM Beta Power Board

Beta Main Board Power

axiom_beta_power_board_v1.25

12/14/21 6:59 PM

Copyright (C) 2014-2017 H.Poetzl
Licensed under CERN OHL v.1.2

Sheet: 3/14

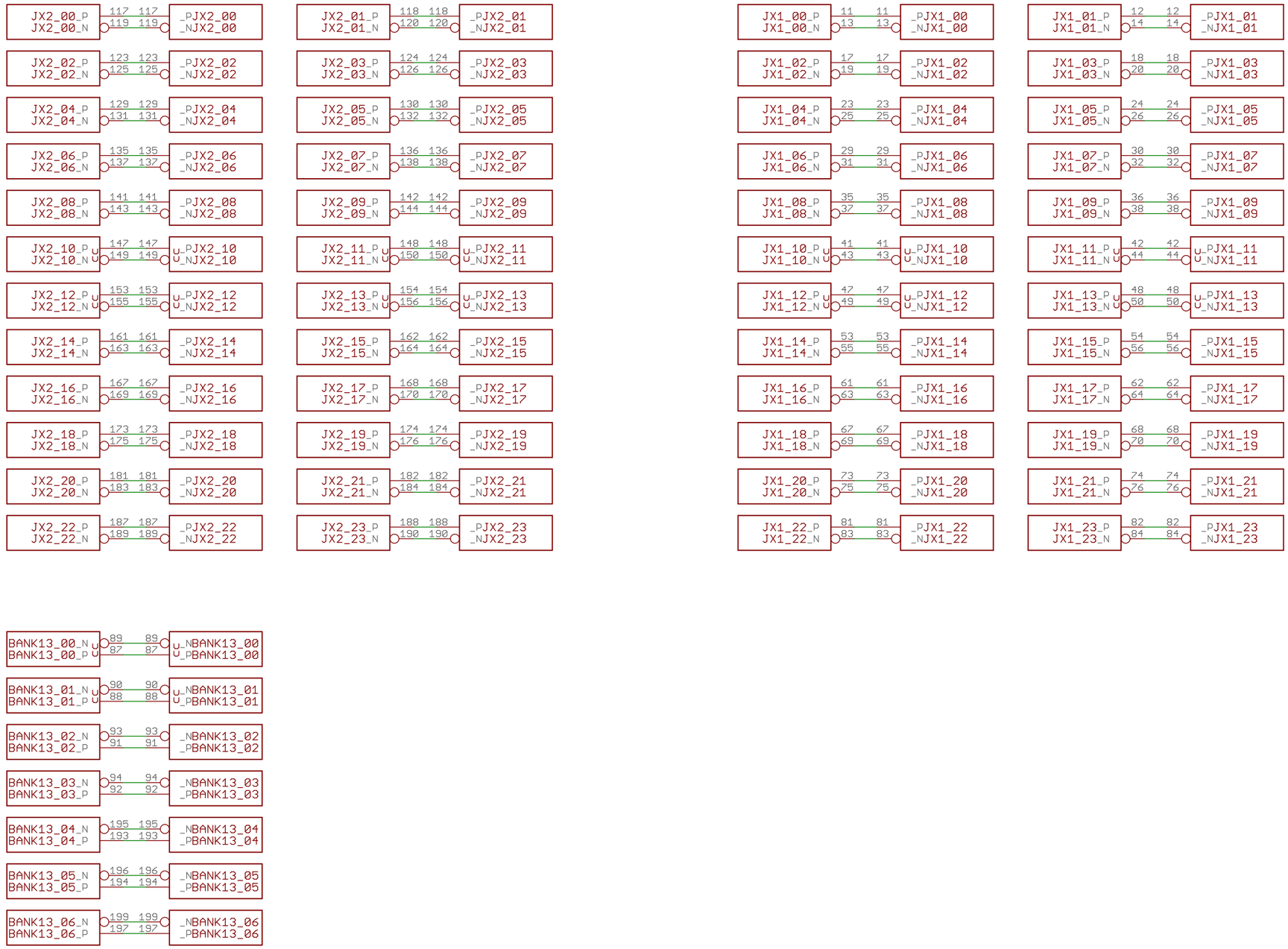

AXIOM Beta Power Board

LVDS Passthrough

axiom_beta_power_board_v1.25

12/14/21 6:59 PM

Sheet: 4/14

Copyright (C) 2014-2017 H.Poetzl
Licensed under CERN OHL v.1.2

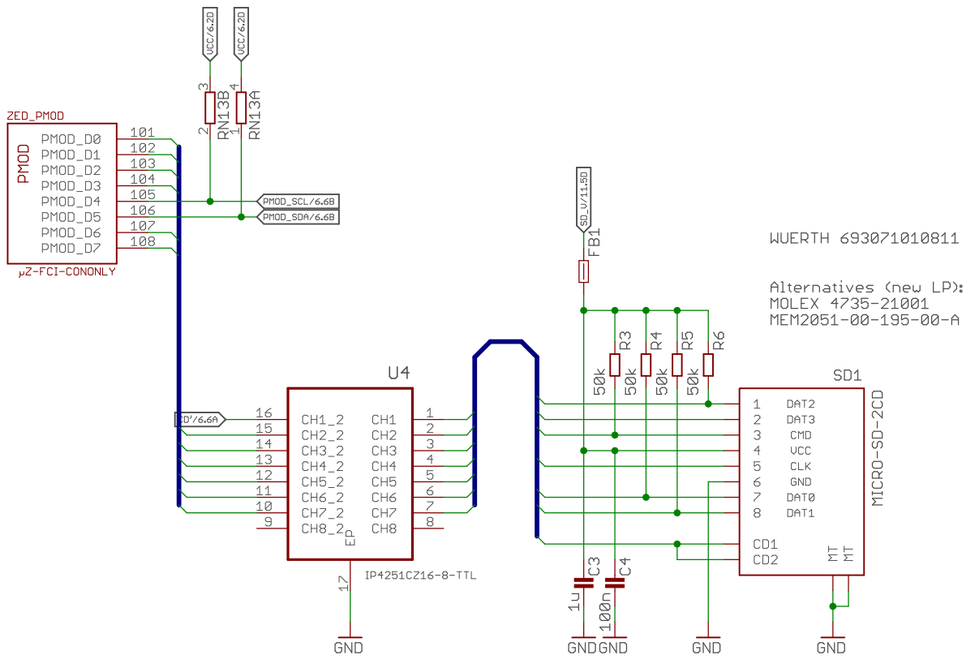

WUERTH 693071010811

Alternatives (new LP):
MOLEX 4735-21001
MEM2051-00-195-00-A

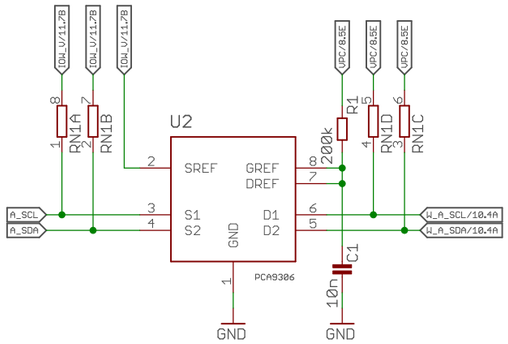

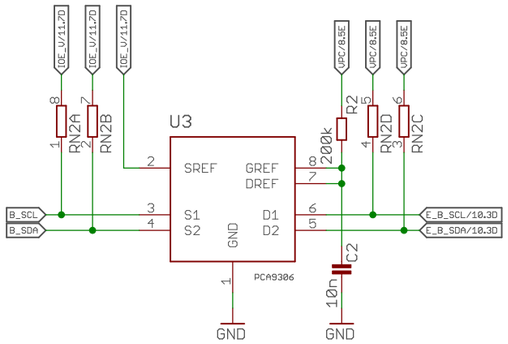

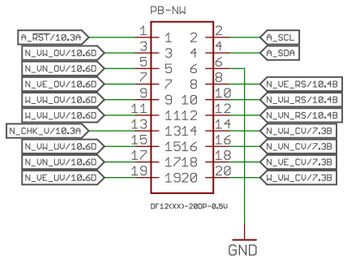

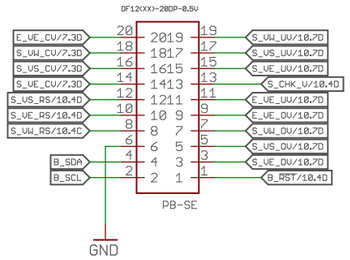

AXIOM Beta Power Board

Level Translation and uSD

axiom_beta_power_board_v1.25

12/14/21 6:59 PM

Copyright (C) 2014-2017 H.Poetzl
Licensed under CERN OHL v.1.2

Sheet: 5/14

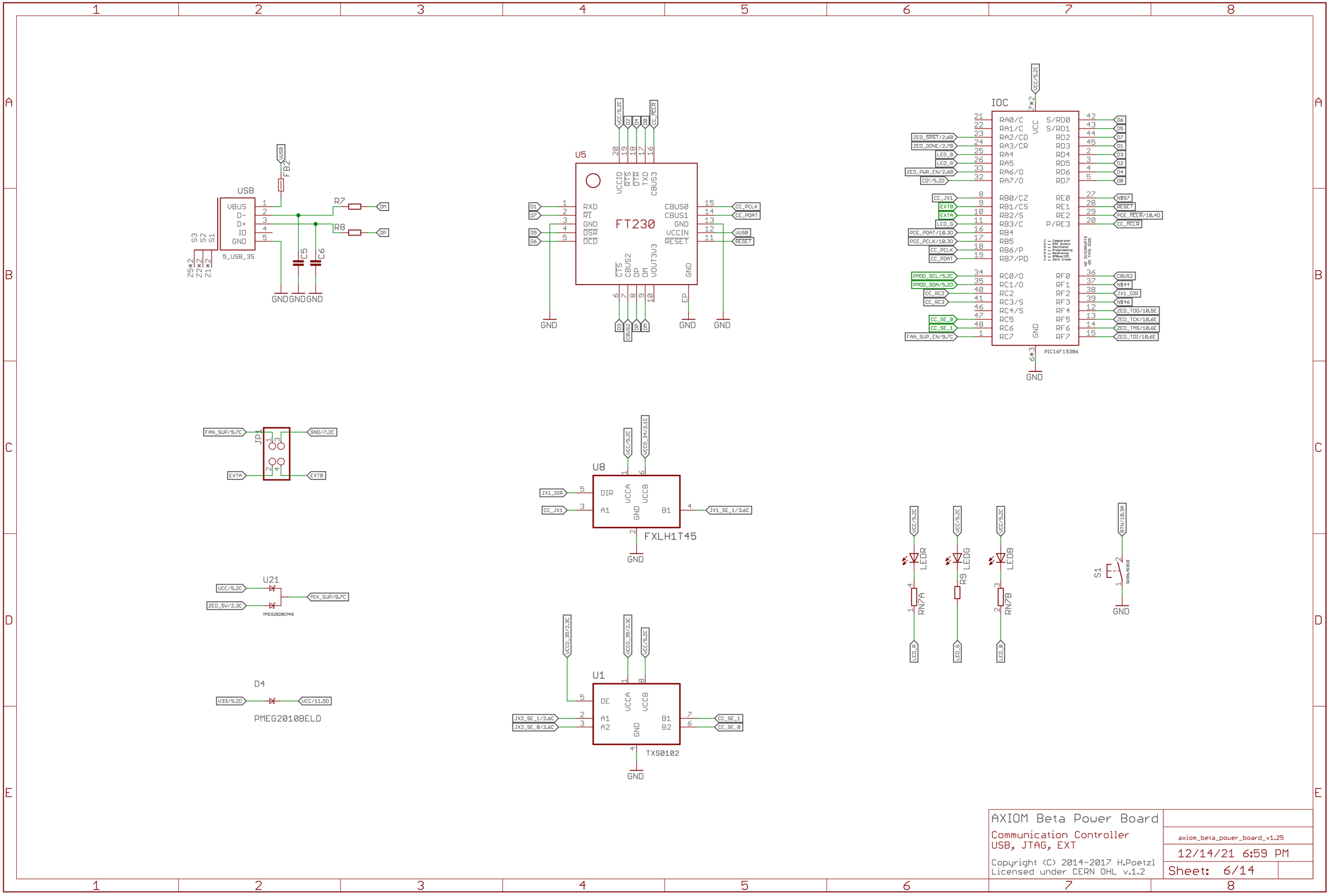

AXIOM Beta Power Board

Communication Controller
USB, JTAG, EXT

Copyright (C) 2014-2017 H.Poetzl
Licensed under CERN OHL v.1.2

axiom_beta_power_board_v1.25

12/14/21 6:59 PM

Sheet: 6/14

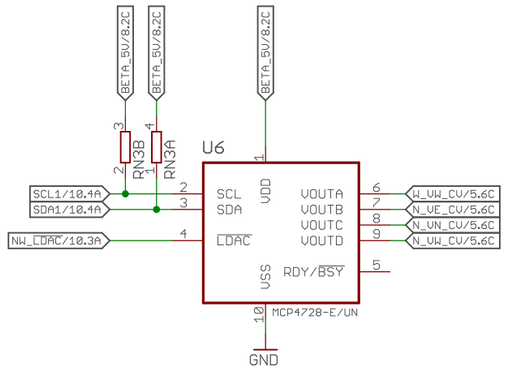

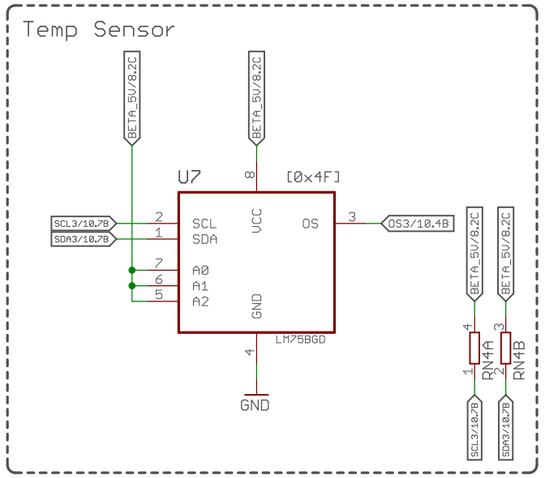

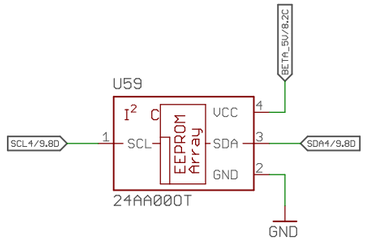

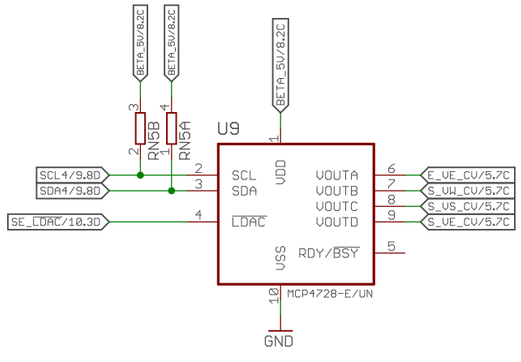

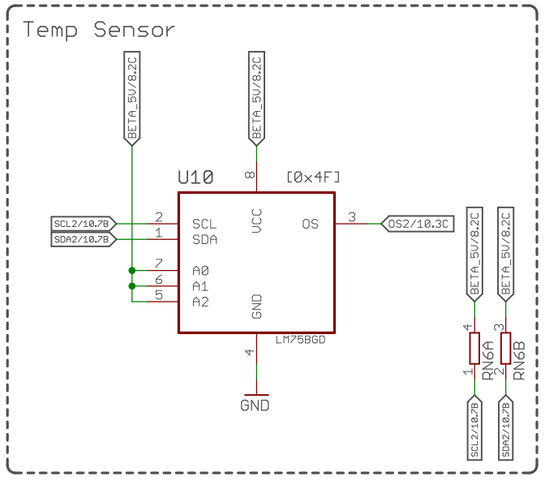

AXIOM Beta Power Board

MicroZed Power

Copyright (C) 2014-2017 H.Poetzl
Licensed under CERN OHL v.1.2

Sheet: 7/14

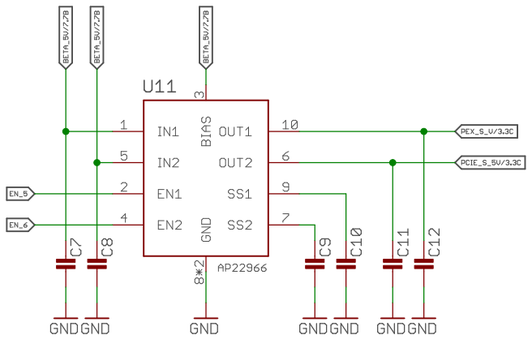

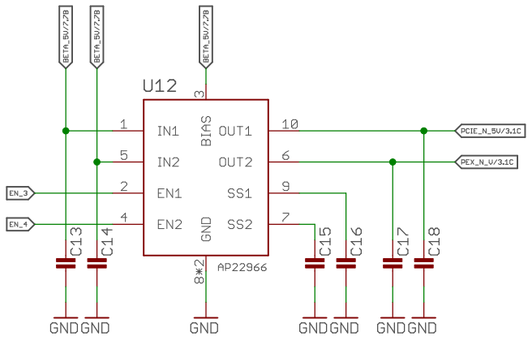

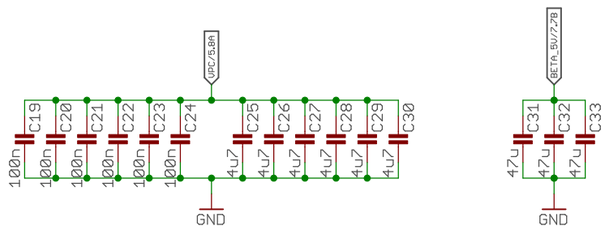

AXIOM Beta Power Board

MicroZed Power

Copyright (C) 2014-2017 H.Poetzl
Licensed under CERN OHL v.1.2

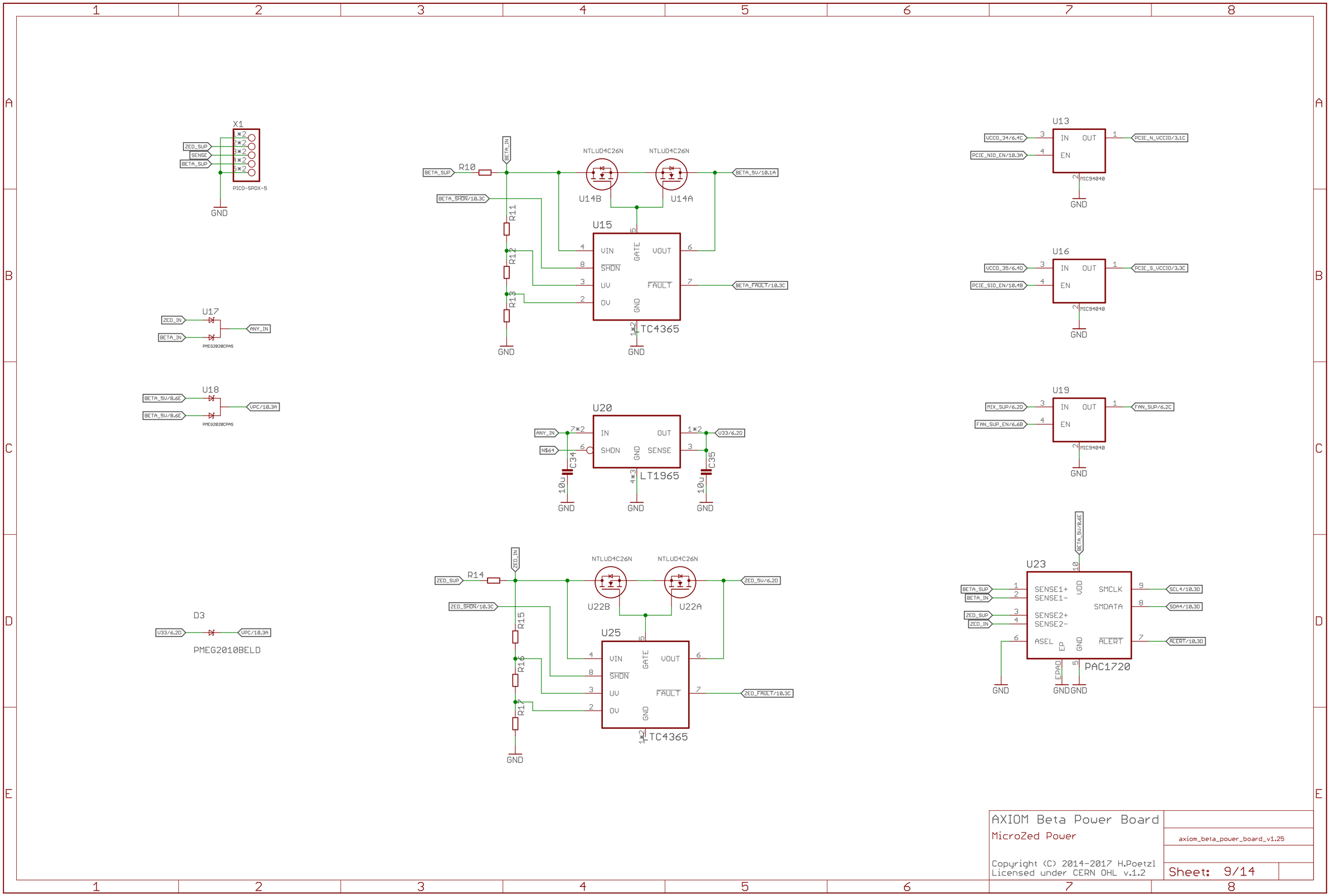

AXIOM Beta Power Board

MicroZed Power

axiom_beta_power_board_v1.25

Copyright (C) 2014-2017 H.Poetzl
Licensed under CERN OHL v.1.2

Sheet: 9/14

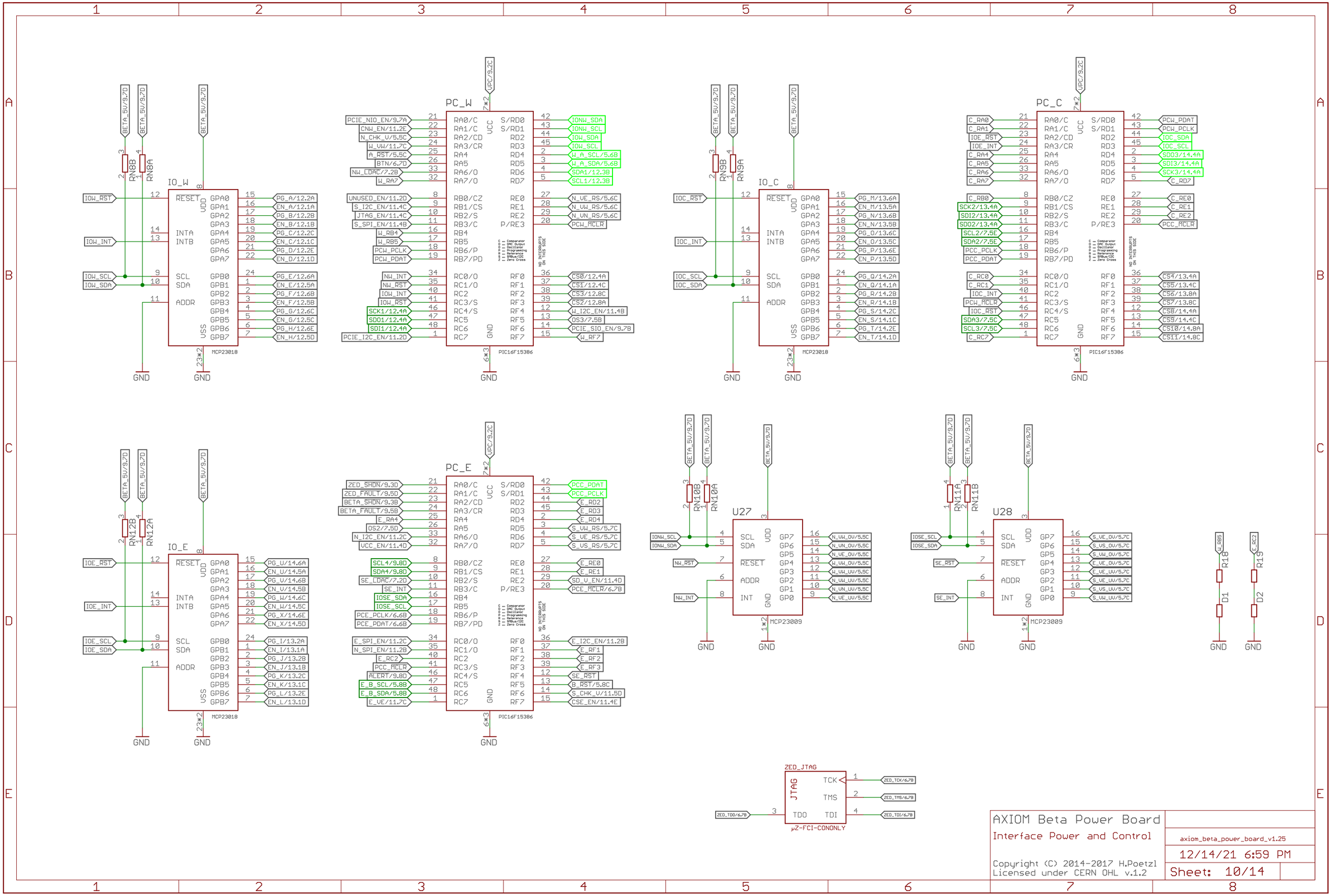
IO_W
MCP23018
PC_W
PIC16F15386
IO_C
MCP23018
PC_C
PIC16F15386
IO_E
MCP23018
PC_E
PIC16F15386
U27
MCP23009
U28
MCP23009
ZED_JTAG
JTAG
TCK
TMS
TDO
TDI
µZ-FCI-CONONLY
BETA_5V/9.7D
VPC/9.2C
GND
RN8B
RN8A
RN9B
RN9A
RN12B
RN12A
RN10B
RN10A
RN11A
RN11B
R18
R19
D1
D2
AXIOM Beta Power Board
Interface Power and Control
axiom_beta_power_board_v1.25
12/14/21 6:59 PM
Sheet: 10/14
Copyright (C) 2014-2017 H.Poetzl
Licensed under CERN OHL v.1.2

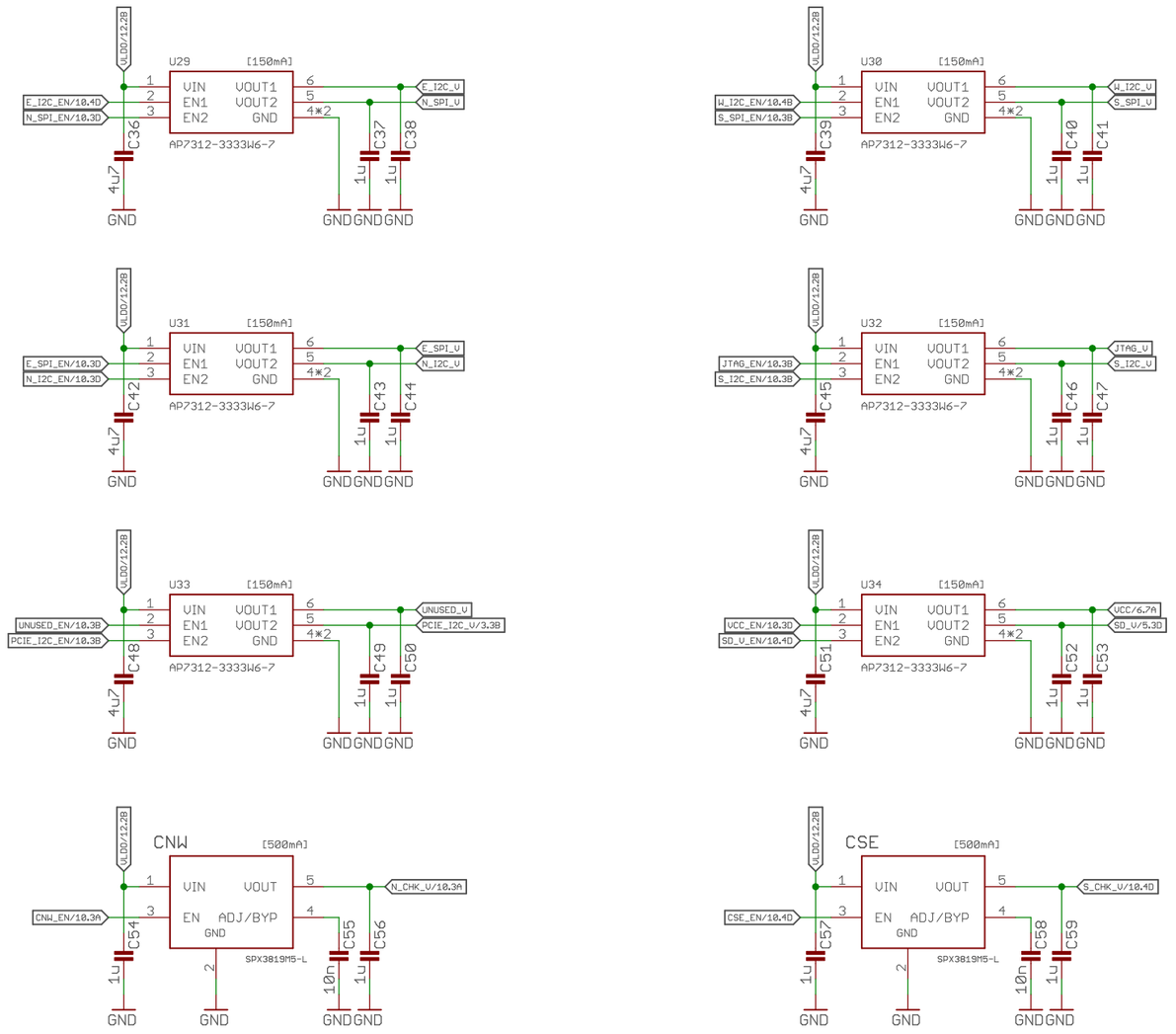

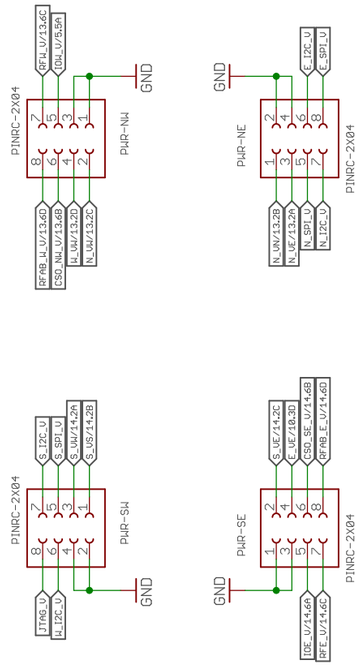

AXIOM Beta Power Board

Interface Power and Control

axiom_beta_power_board_v1.25

12/14/21 6:59 PM

Sheet: 11/14

Copyright (C) 2014-2017 H.Poetzl
Licensed under CERN OHL v.1.2

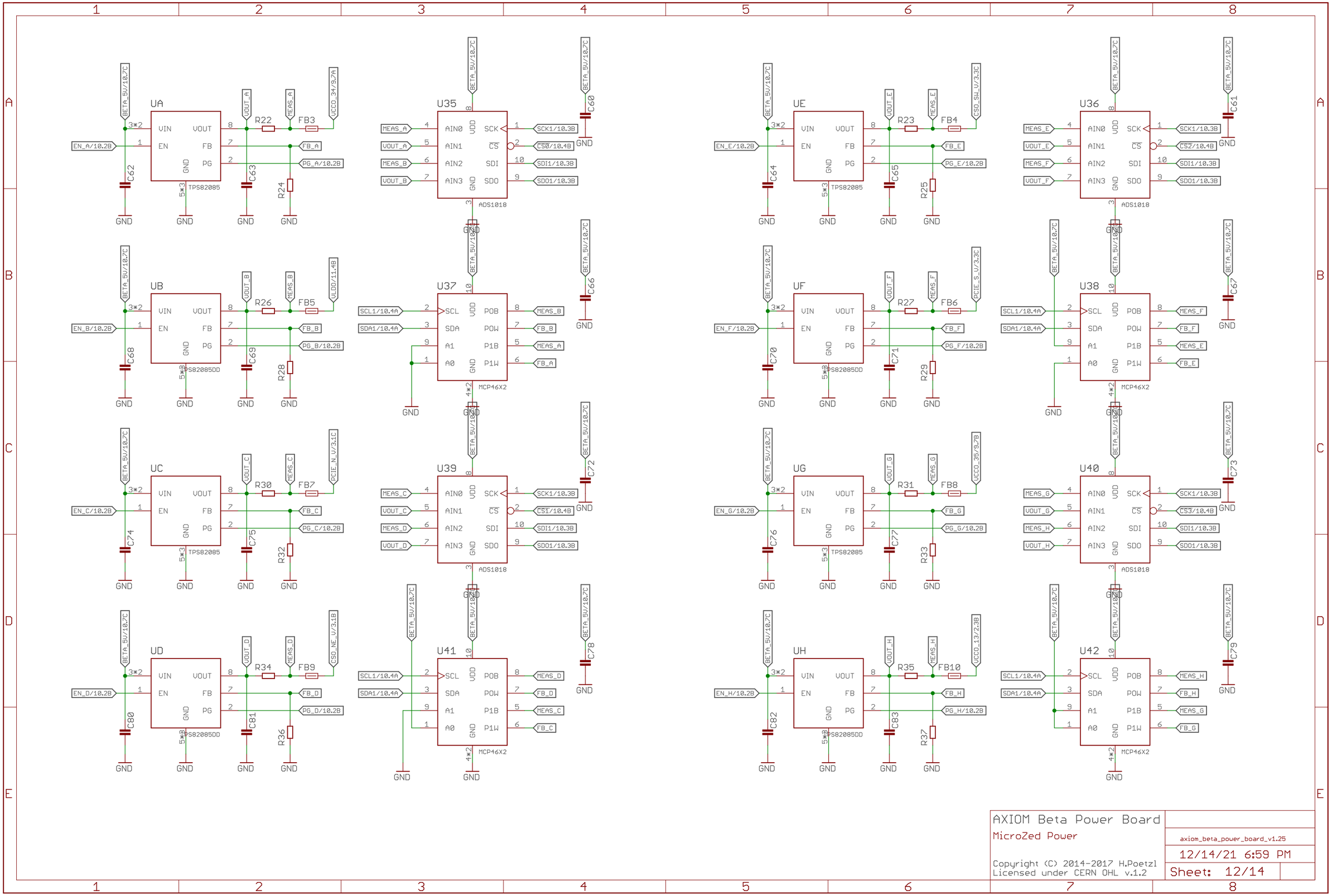

AXIOM Beta Power Board

MicroZed Power

axiom_beta_power_board_v1.25

12/14/21 6:59 PM

Sheet: 12/14

Copyright (C) 2014-2017 H.Poetzl
Licensed under CERN OHL v.1.2

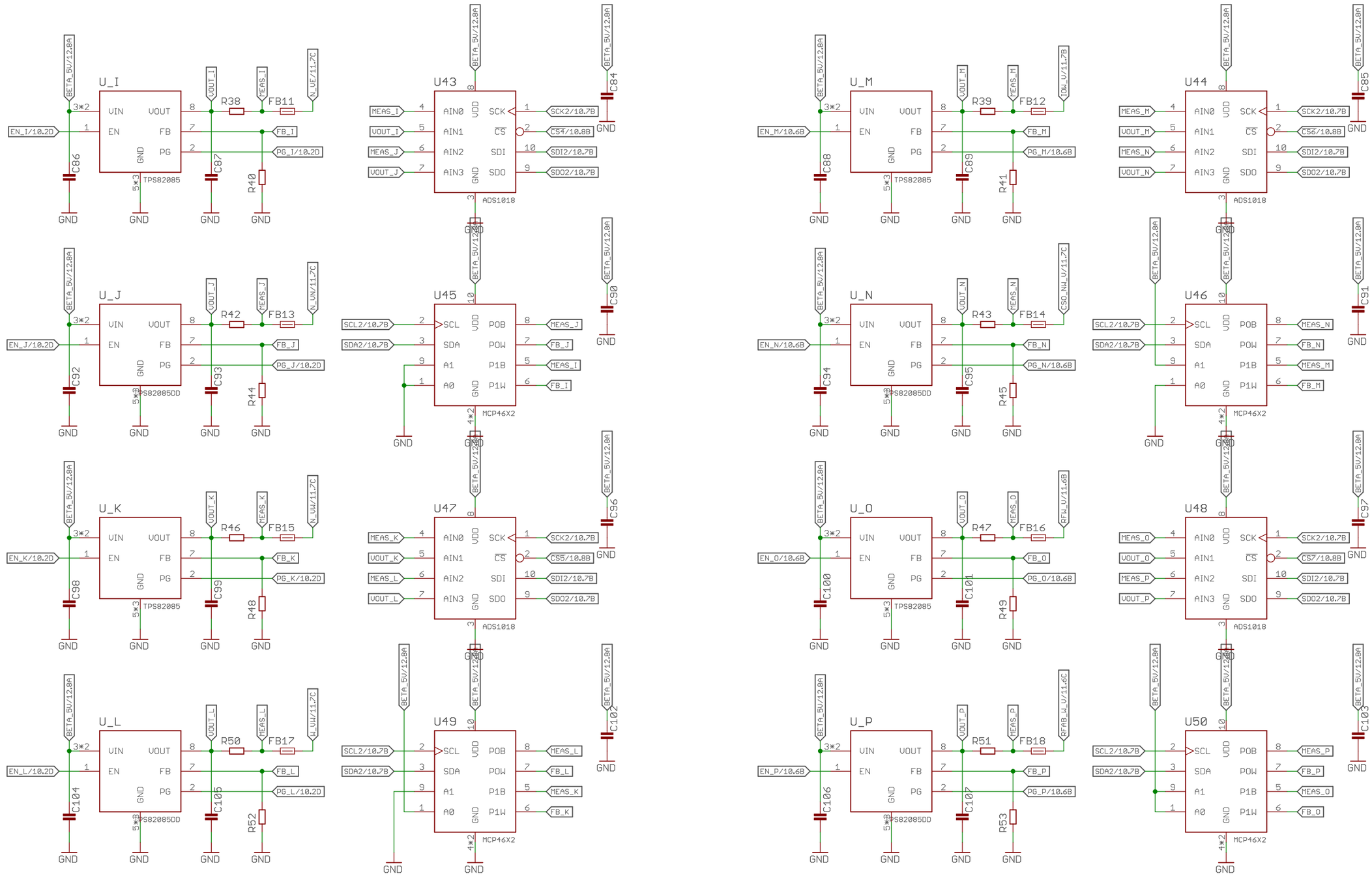

AXIOM Beta Power Board

MicroZed Power

axiom_beta_power_board_v1.25

Copyright (C) 2014-2017 H.Poetzl
Licensed under CERN OHL v.1.2

Sheet: 13/14

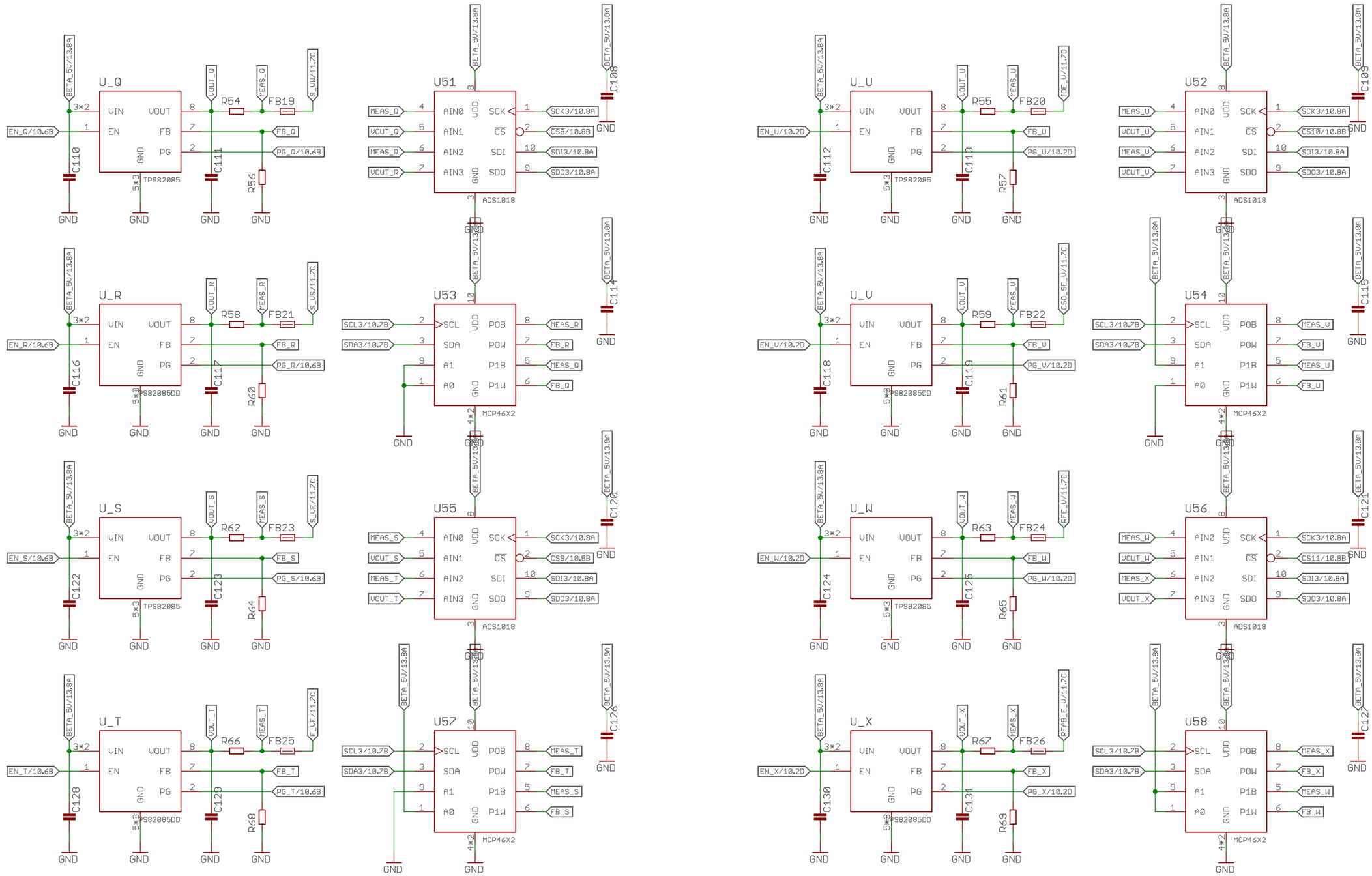

AXIOM Beta Power Board

MicroZed Power

Copyright (C) 2014-2017 H.Poetzl
Licensed under CERN OHL v.1.2

Sheet: 14/14