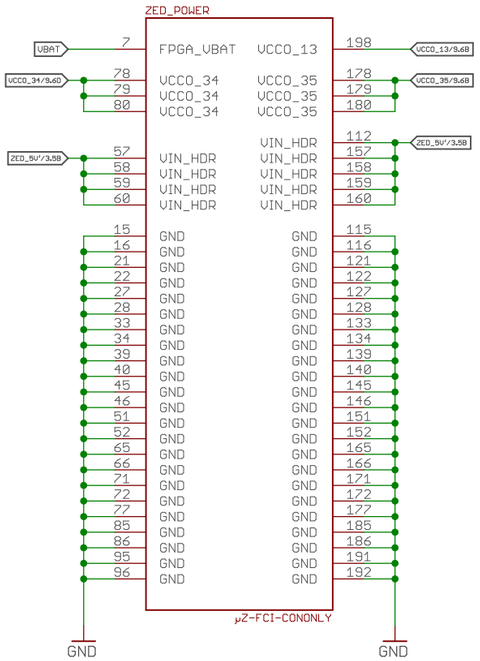

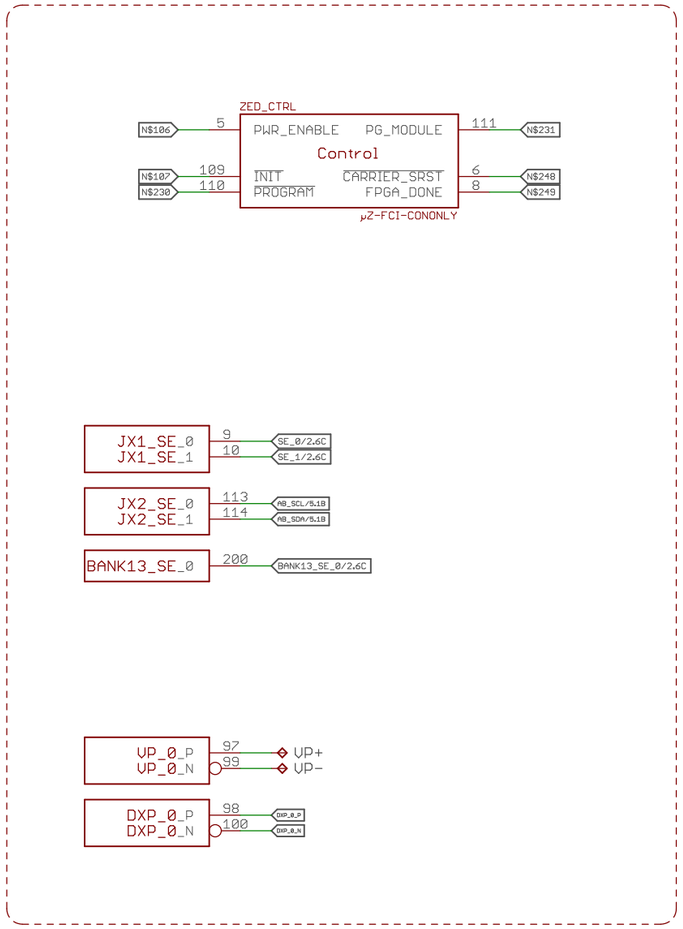

AXIOM Beta Test

MicroZed Power

axiom_beta_power_board_v0.29

not saved!

Copyright (C) 2014-2015 H.Poetzl
Licensed under CERN OHL v.1.2

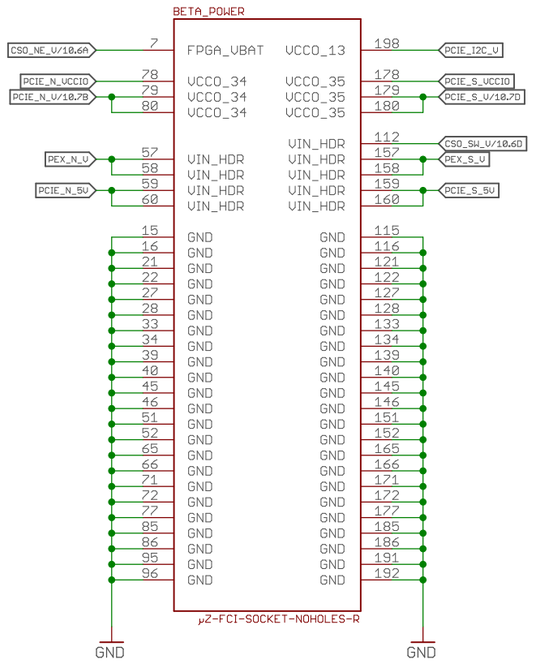

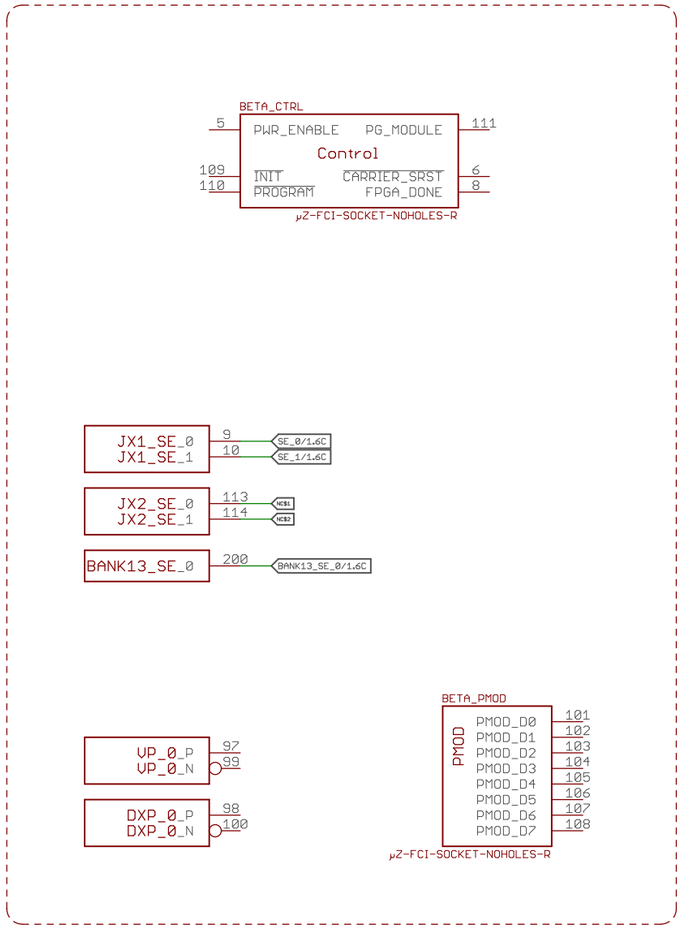

AXIOM Beta Test

Beta Main Board Power

axiom_beta_power_board_v0.29

not saved!

Copyright (C) 2014-2015 H.Poetzl
Licensed under CERN OHL v.1.2

Sheet: 2/10

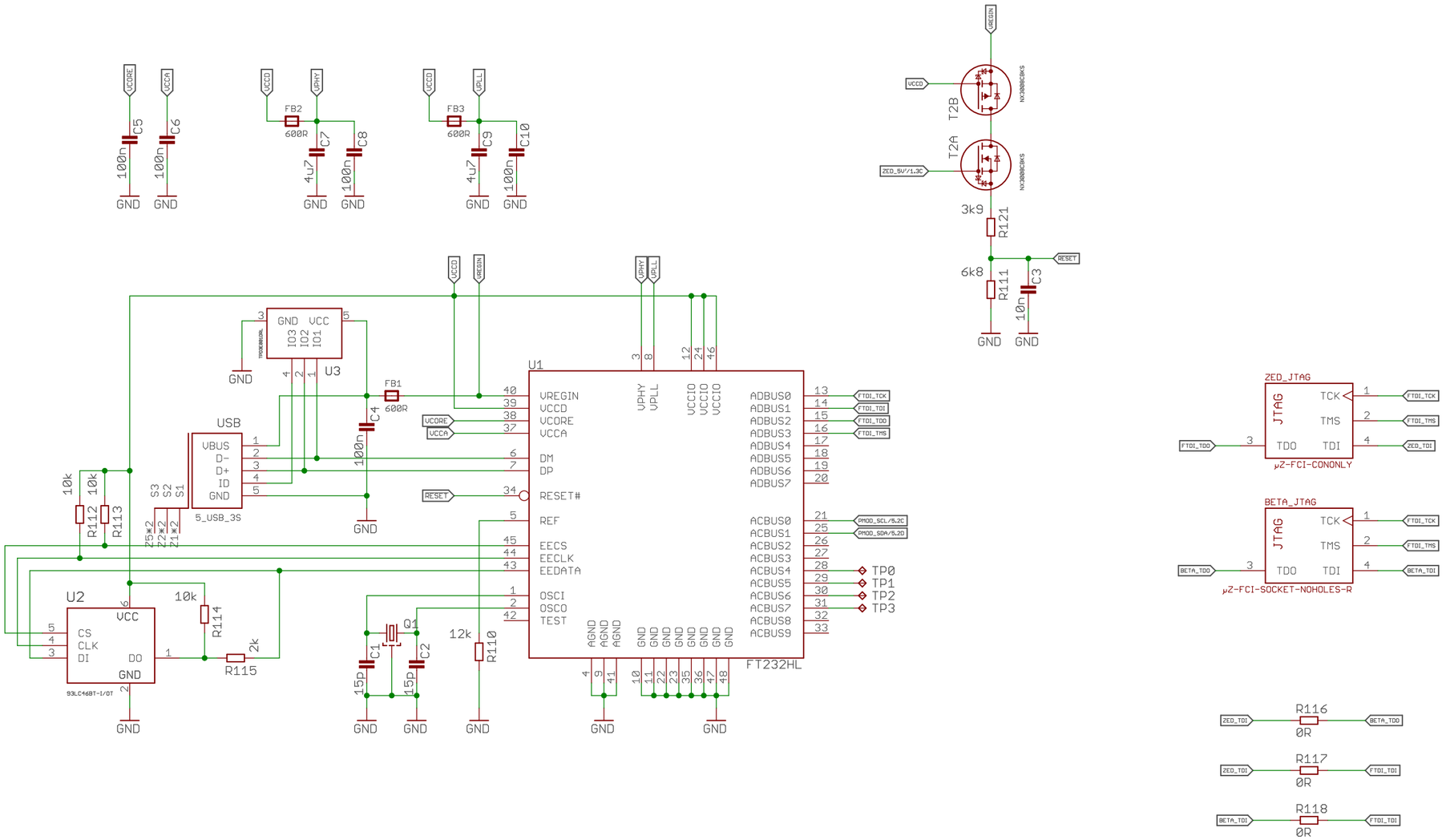

AXIOM Beta Test

FTDI Debug Interface

axiom_beta_power_board_v0.28

not saved!

Sheet: 3/10

Copyright (C) 2014-2015 H.Poetzl
Licensed under CERN OHL v.1.2

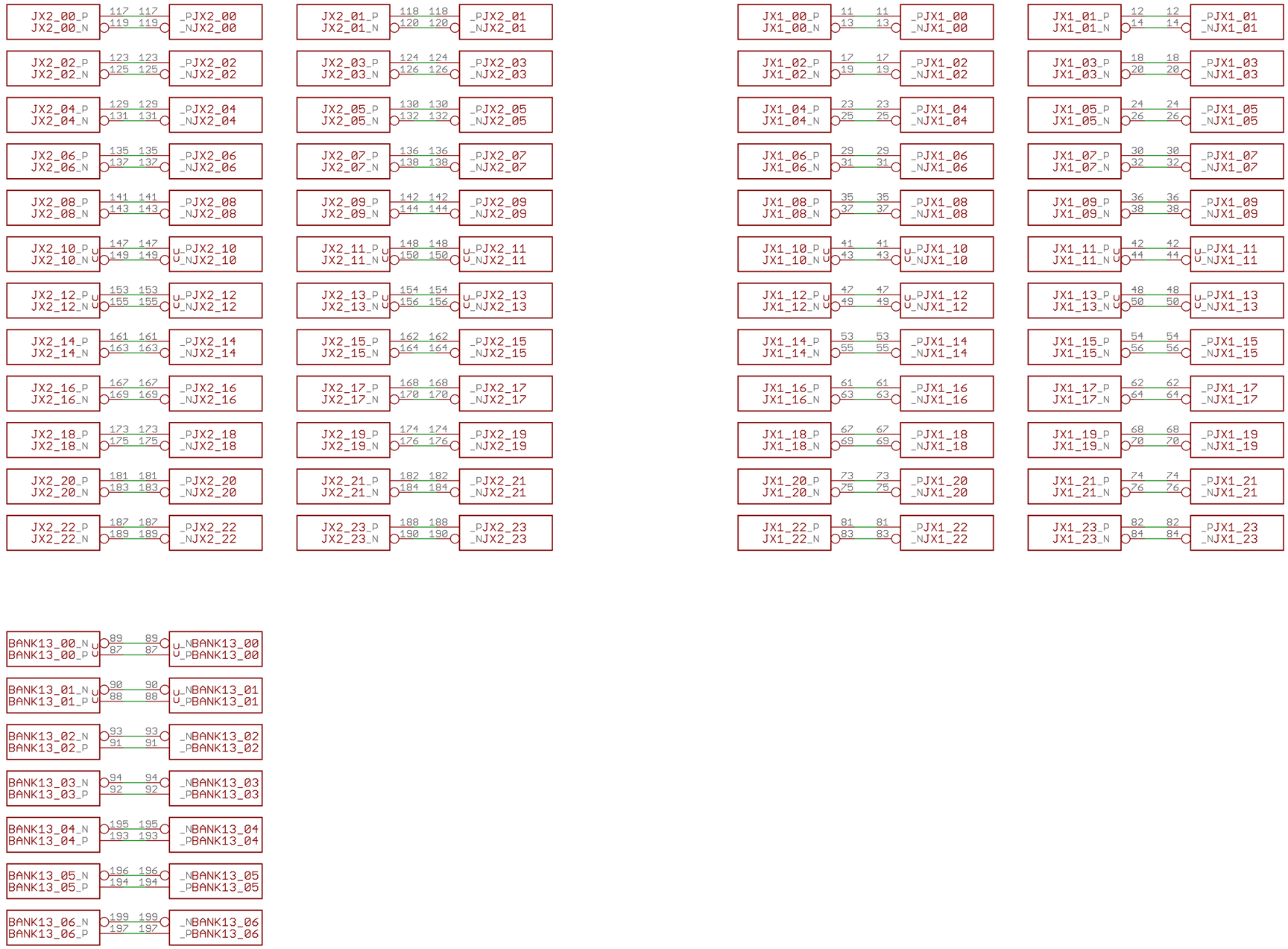

AXIOM Beta Test

LVDS Passthrough

Copyright (C) 2015 H.Poetzl
Licensed under CERN OHL v.1.2

axiom_beta_power_board_v0.29

not saved!

Sheet: 4/10

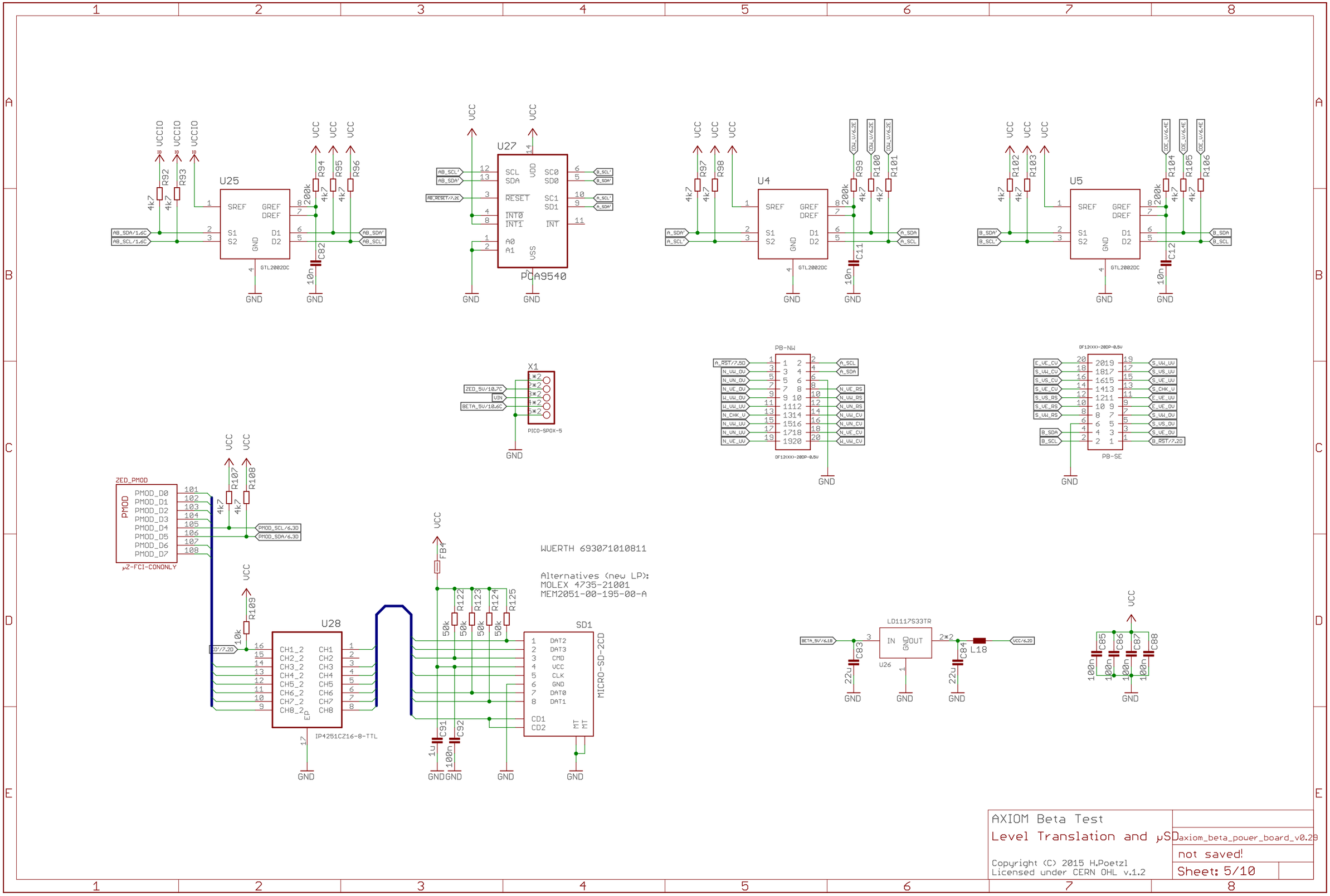
U25
GTL2002DC
U27
PCA9540
U4
U5
X1
PICO-SPOX-5
PB-NW
PB-SE
ZED_PMOD
PMOD
µZ-FCI-CONONLY
U28
IP4251CZ16-8-TTL
WUERTH 693071010811
Alternatives (new LP):
MOLEX 4735-21001
MEM2051-00-195-00-A
SD1
MICRO-SD-2CD
LD1117S33TR
U26
AXIOM Beta Test
Level Translation and µSD
axiom_beta_power_board_v0.2B
not saved!
Sheet: 5/10
Copyright (C) 2015 H.Poetzl
Licensed under CERN OHL v.1.2

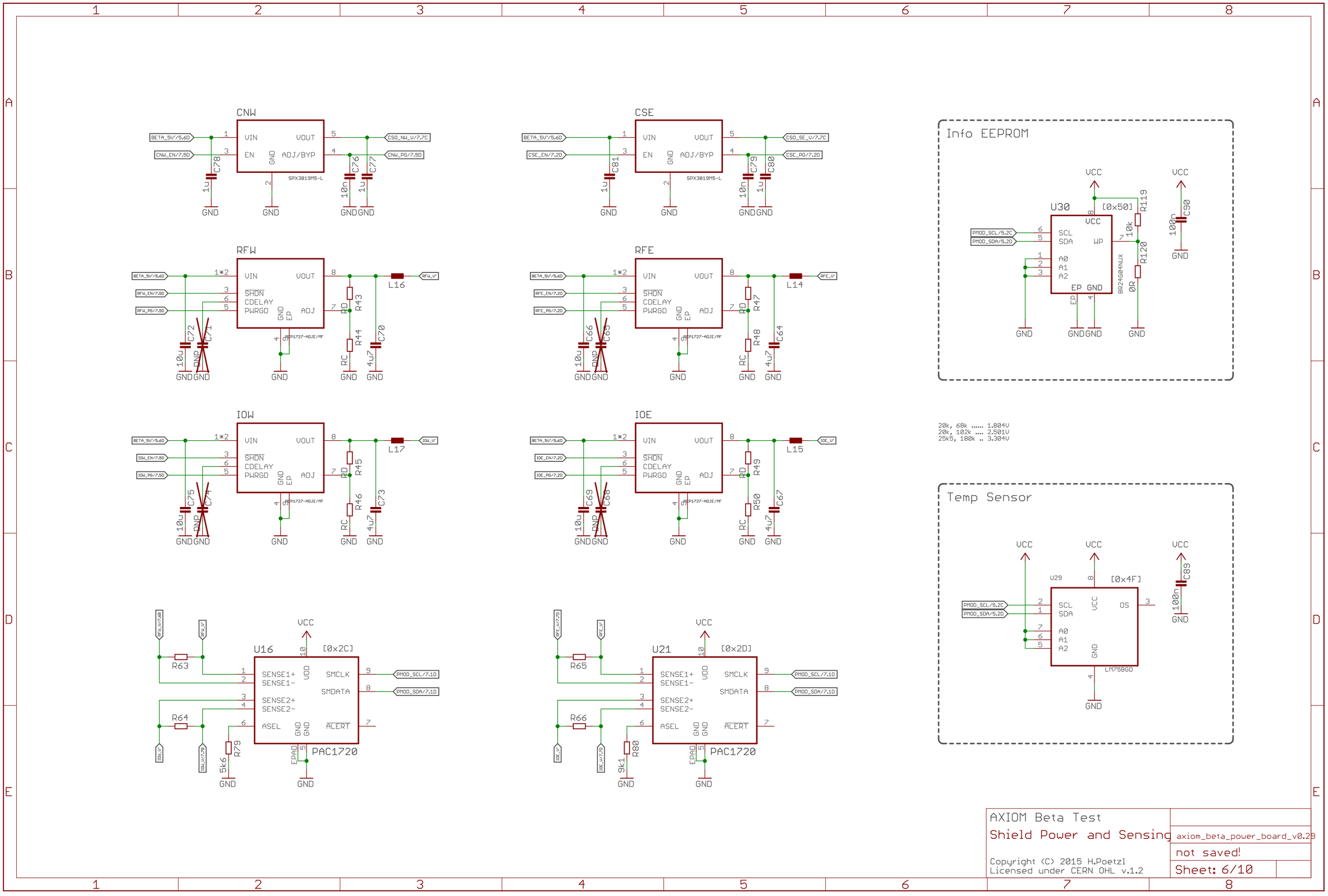
CNW
BETA_5V/5.6D
CNW_EN/7.5D
VIN
EN
GND
VOUT
ADJ/BYP
SPX3819M5-L
CSO_NW_V/7.7C
CNW_PG/7.5D
C78 1u
C76 10n
C77 1u
CSE
BETA_5V/5.6D
CSE_EN/7.2D
C81 1u
CSO_SE_V/7.7C
CSE_PG/7.2D
C79 10n
C80 1u
RFW
BETA_5V/5.6D
RFW_EN/7.5D
RFW_PG/7.5D
SHDN
CDELAY
PWRGD
ADJ
MCP1727-ADJE/MF
RFW_V
L16
R43 RD
R44 RC
C72 10u
C71 DNP
C70 4u7
RFE
BETA_5V/5.6D
RFE_EN/7.2D
RFE_PG/7.2D
RFE_V
L14
R47 RD
R48 RC
C66 10u
C65 DNP
C64 4u7
IOW
BETA_5V/5.6D
IOW_EN/7.5D
IOW_PG/7.5D
IOW_V
L17
R45 RD
R46 RC
C75 10u
C74 DNP
C73 4u7
IOE
BETA_5V/5.6D
IOE_EN/7.2D
IOE_PG/7.2D
IOE_V
L15
R49 RD
R50 RC
C69 10u
C68 DNP
C67 4u7
Info EEPROM
VCC
U30
[0x50]
PMOD_SCL/5.2C
PMOD_SDA/5.2D
SCL
SDA
WP
A0
A1
A2
EP
BR24G04NUX
R119 10k
R120 0R
C90 100n
20k, 68k 1.804V
20k, 102k 2.501V
25k5, 180k .. 3.304V
Temp Sensor
U29
[0x4F]
OS
LM75BGD
C89 100n
U16
[0x2C]
RFW_V/7.6B
IOW_V/7.7B
R63
R64
R79 5k6
SENSE1+
SENSE1-
SENSE2+
SENSE2-
ASEL
VDD
SMCLK
SMDATA
ALERT
EPAD
PAC1720
PMOD_SCL/7.1D
PMOD_SDA/7.1D
U21
[0x2D]
RFE_V/7.7D
IOE_V/7.7D
R65
R66
R80 9k1
AXIOM Beta Test
Shield Power and Sensing
axiom_beta_power_board_v0.29
not saved!
Copyright (C) 2015 H.Poetzl
Licensed under CERN OHL v.1.2
Sheet: 6/10

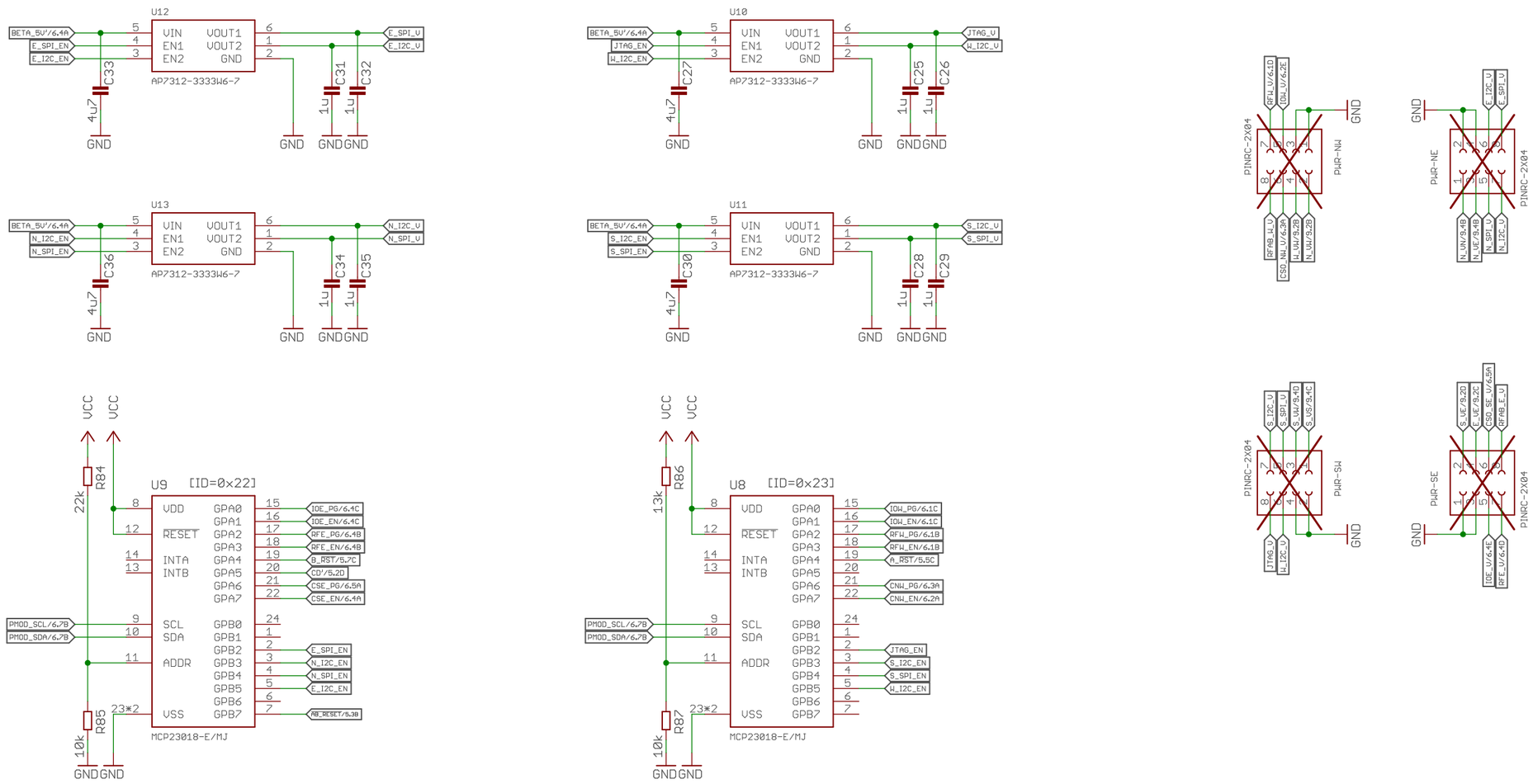

AXIOM Beta Test

Interface Power and Control

axiom_beta_power_board_v0.29

not saved!

Sheet: 7/10

Copyright (C) 2015 H.Poetzl
Licensed under CERN OHL v.1.2

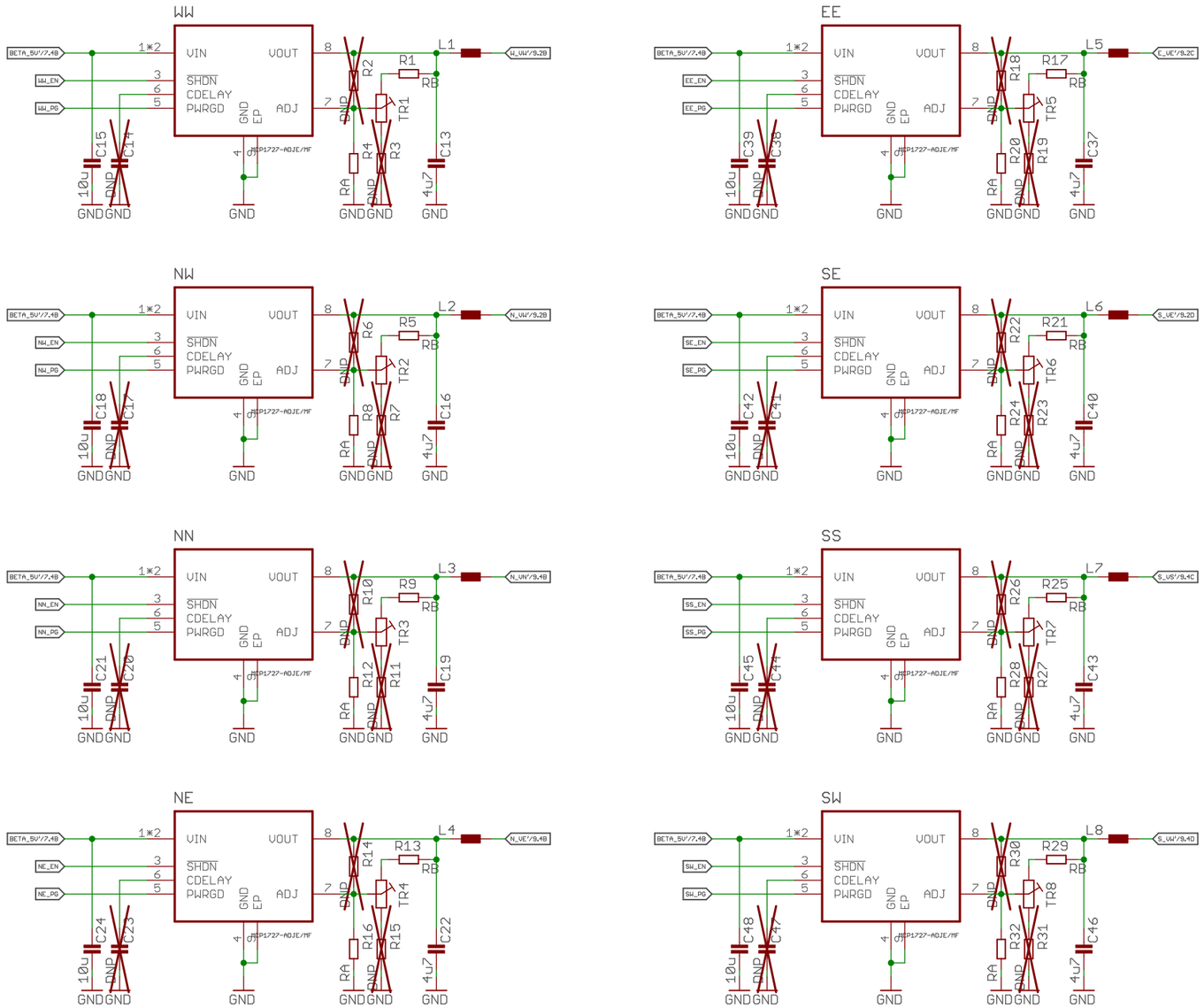

Optional remote sensing

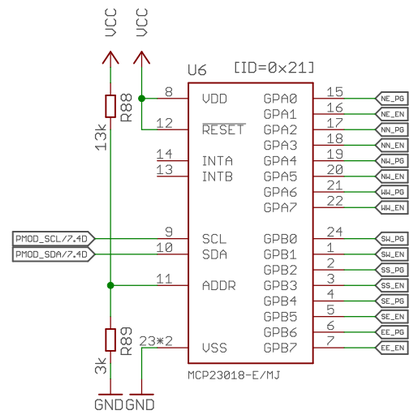

18k, 100k, 43k ..... 1.389V - 3.667V
20k, 100k, 62k ..... 1.681V - 3.731V
20k5, 100k, 68k .... 1.770V - 3.770V
13k, 75k, 30k9 ..... 1.385V - 3.750V
12k4, 75k, 30k ..... 1.402V - 3.882V

AXIOM Beta Test

Sensor Power and Control

axiom_beta_power_board_v0.29

not saved!

Sheet: 8/10

Copyright (C) 2015 H.Poetzl
Licensed under CERN OHL v.1.2

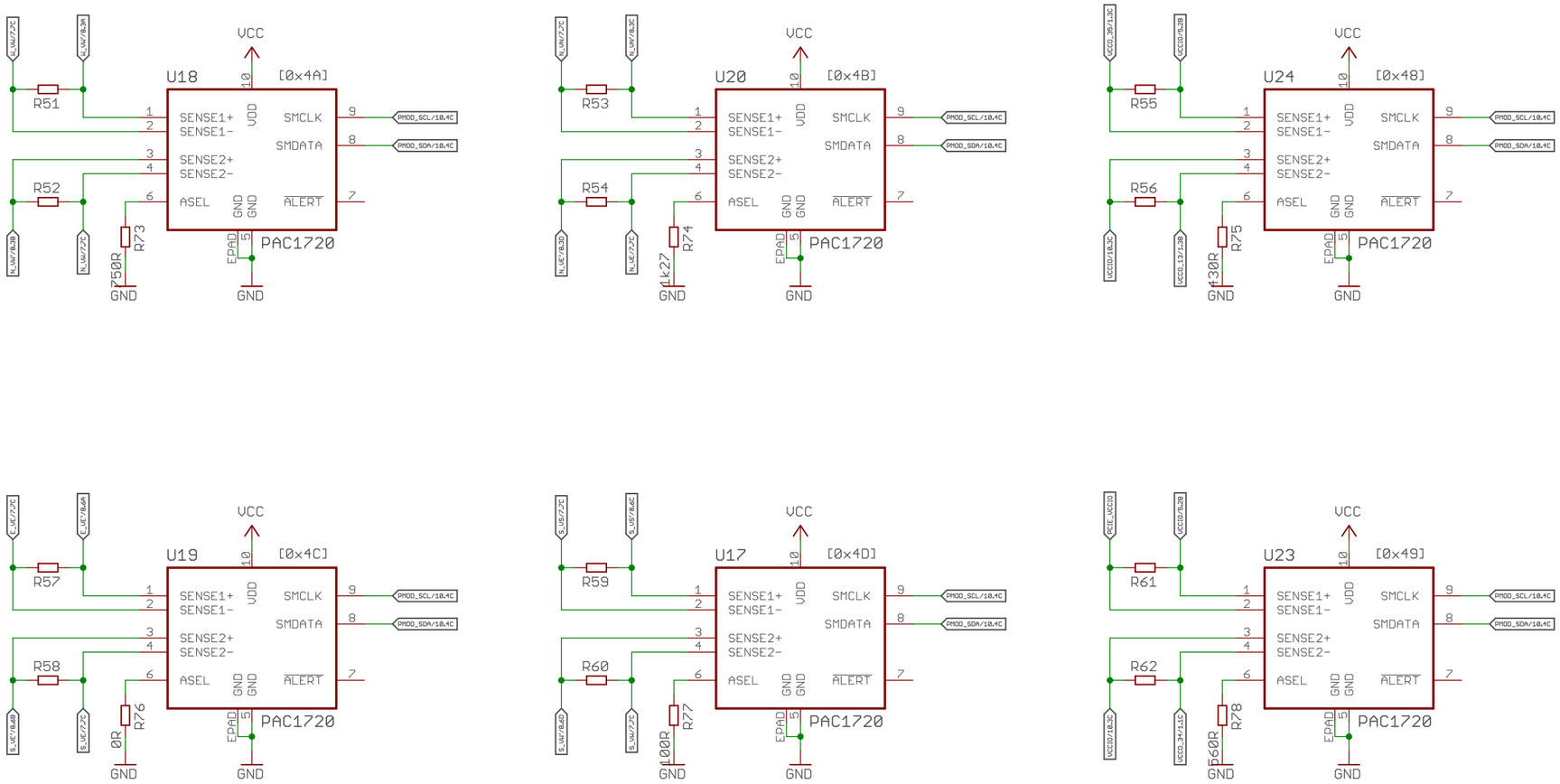

AXIOM Beta Test

Sensor Power Sensing

axiom_beta_power_board_v0.29

not saved!

Sheet: 9/10

Copyright (C) 2015 H.Poetzl
Licensed under CERN OHL v.1.2

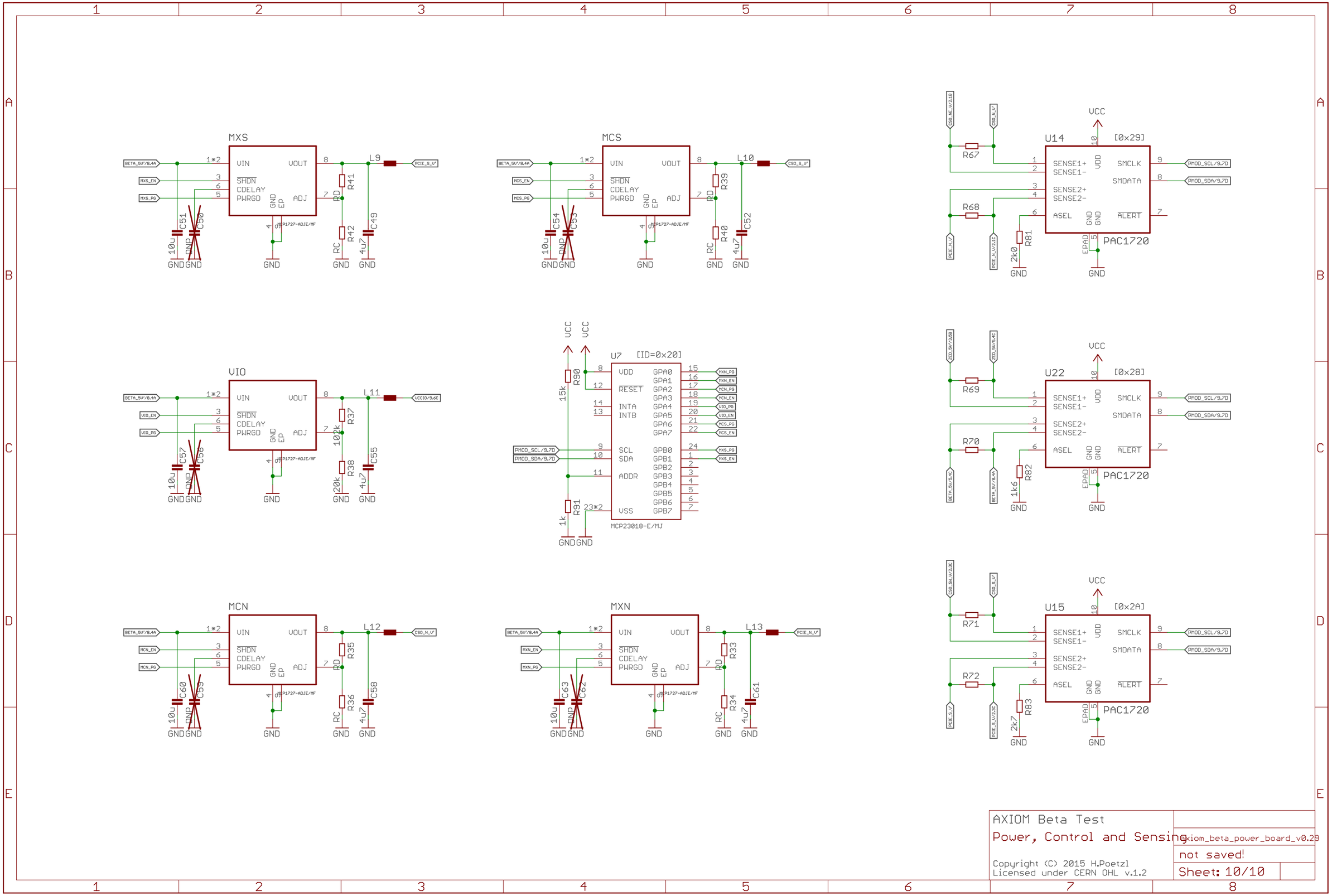
MXS
MCS
VIO
MCN
MXN
U7 [ID=0x20]
MCP23018-E/MJ
U14 [0x29]
U22 [0x28]
U15 [0x2A]
PAC1720
VCC
GND
AXIOM Beta Test
Power, Control and Sensing
Copyright (C) 2015 H.Poetzl
Licensed under CERN OHL v.1.2
axiom_beta_power_board_v0.29
not saved!
Sheet: 10/10