26 Ports and Maritime Works

C J Evans MA(Cantab), FEng, FICE, FIStructE
Wallace Evans and Partners

Contents

26.1 Sitting of ports and harbours 26/3
26.1.1 Design of harbours 26/3
26.1.2 Sedimentation 26/3

26.2 Port planning 26/3
26.2.1 Types of cargoes 26/3
26.2.2 Sizes and types of vessels to be catered for 26/4
26.2.3 Types of vessels 26/4
26.2.4 Methods of cargo handling 26/5
26.2.5 Land area 26/5
26.2.6 Access 26/5
26.2.7 Other considerations 26/5

26.3 Navigation 26/6
26.3.1 Requirements 26/6

26.4 Design of maritime structures 26/7

26.5 Marginal berths 26/7

26.6 Piers and jetties 26/9
26.6.1 Piers 26/9
26.6.2 Jetties 26/9

26.7 Dolphins 26/10
26.7.1 Breasting dolphins 26/10
26.7.2 Mooring dolphins 26/10

26.8 Roll-on roll-off berths 26/10

26.9 Loads 26/12
26.9.1 Dead load 26/12
26.9.2 Superimposed dead load 26/12
26.9.3 Imposed load 26/12
26.9.4 Soil and differential water load 26/12
26.9.5 Environmental loads 26/12

26.10 Fendering 26/12
26.10.1 Introduction 26/12
26.10.2 Fendering systems 26/13
26.10.3 Design of an attached fendering system 26/13
26.10.4 The basic energy equation 26/13
26.10.5 The factor of safety 26/15
26.10.6 Structural considerations 26/15

26.11 Locks 26/15
26.11.1 Lock dimensions 26/15
26.11.2 Lock gates 26/15

26.12 Pavements 26/15

26.13 Durability and maintenance 26/16

References 26/16

Bibliography 26/16

This page has been reformatted by Knovel to provide easier navigation.

The function of a port is to provide an interface between two modes of transport – land and sea – for cargo and passengers. The requirements for sea transport are: (1) an adequate area of water of sufficient depth for navigation and berthing; and (2) adequate shelter so that berthing, loading and unloading can be carried out safely and efficiently. The requirements for the landside are: (1) adequate land area for working space, loading and unloading vessels and for handling and storage of cargoes; and (2) suitable access to areas served by the port.

26.1 Siting of ports and harbours

The siting of a port is generally dictated by commercial and economic requirements, particularly in relation to land transportation. A natural harbour is to be preferred in order to avoid the necessity of expensive breakwaters, even though some dredging may be required to provide the necessary area of deep water. If the material to be dredged is suitable, land reclamation may be possible using the dredged material to provide land for the shore facilities of a port.

If a natural harbour is not available, breakwaters will be required to provide adequate shelter. Breakwaters are normally very expensive however, and this must be weighed against any additional transport costs and compared with the expenditure incurred at a port where breakwaters are not required.

In planning a new harbour involving breakwaters, consideration must be given to the following factors, in addition to the design of the breakwater itself (see Chapter 31 for design of breakwaters): (1) waves; (2) littoral drift and sedimentation; (3) tides and currents; and (4) navigation.

26.1.1 Design of harbours

The main purpose of breakwaters is to provide protection from waves, and the biggest wave reduction is effected with the smallest entrance sited remote from the direction of approach of the waves. However, this can cause difficulty when approaching the entrance with heavy seas abeam the vessel. As harbours are normally designed to serve as a harbour of refuge, i.e. a protection to be sought by vessels during the height of a storm, it is common to site an entrance at a small angle to the heaviest sea, thereby improving accessibility at the expense of smoothness within the harbour.

Wave-height reduction within a harbour is improved as the distance from the entrance, and the width parallel to the shore, increase. It is desirable to have wave-spending beaches – or armoured slopes which absorb wave energy – facing the waves within the harbour, rather than vertical walls which reflect waves and could cause resonance resulting in significant increases of wave heights. Wave heights within a harbour are normally predicted using numerical models or a physical model; in both cases, various breakwater alignments can be tested to give the optimum alignment. An empirical method for assessing wave heights within a harbour is given in the Stevenson formula:

$$h_p = H\left[(b/B)^{\frac{1}{2}} - 0.027D^{\frac{1}{2}}\left(1 + \frac{b^{\frac{1}{2}}}{B}\right)\right] \qquad (26.1)$$

where h_p is the height of reduced wave at any point in the harbour, H is the height of wave at entrance, b is the breadth of entrance, B is the breadth of harbour at P, being length of arc with centre at midway of entrance and radius D and D is the distance from entrance to point P.

This formula does not take into account the result of any reflection of waves. For assessment of H, see Chapter 31.

26.1.2 Sedimentation

Sedimentation in a harbour can arise from three sources: (1) littoral drift; (2) tidal movements; and (3) where a harbour is located at a river mouth, from the river. The minimizing of sedimentation in navigation channels, at the entrance and within the harbour, is of prime importance in reducing the cost of maintenance dredging.

Littoral drift occurs to some extent along most coastlines. If the path of the drift is obstructed by a solid structure, the heavier particles will accumulate on the drift side and this accumulation may well extend round to the inside. The finer particles of the drift, which outside the harbour are kept in suspension by current velocities will, on entering the harbour, no longer be maintained in suspension and will settle out. Littoral drift normally occurs in one direction, but at certain times of the year or under some storm conditions, the direction of drift can be reversed. Littoral drift is discussed in more detail in Chapter 31.

Where a harbour is subjected to large tidal ranges, material in suspension will be brought into the harbour as the tide rises and, during periods of slack tide, material will settle on the sea-bed. Where a harbour is at a river mouth, the material carried down by the river is a further source of sedimentation. The interaction of river flows and movements of the sea makes for further complications, with the added difficulty of the difference in density between fresh and salt water.

Predictions of sedimentation are best carried out by numerical modelling. Physical models can also be used, but these can be less accurate – particularly with fine material in suspension – because of the difficulty of scaling-down the fine particle sizes to the scale of the model, and results should be treated with caution.

26.2 Port planning

The planning of a new port or expansion or improvement of an existing one requires many factors to be taken into consideration. Apart from passenger ferry terminals and cruise ship terminals, ports are primarily provided for the handling of cargo. Amongst the factors to be considered are:

(1) Nature of cargoes to be handled.
(2) Sizes and types of vessels to be catered for.
(3) Method of cargo handling.
(4) Land area and operations.
(5) Land access.

26.2.1 Types of cargoes

Between 1960 and 1980 a major revolution in the handling and carrying of maritime cargoes took place and this has led to new concepts in the design of ships, ports and land transportation systems. Generally speaking, during this period emphasis was given to handling and carrying cargoes in larger units, e.g. containers in the case of general cargo, and larger single shipments of bulk commodities such as wheat and oil, etc. Ship sizes also increased to obtain the benefits of the increased scale of operation.

26.2.1.1 General cargoes

Nonunitized (or break bulk) cargoes. These consist of small consignments requiring to be handled individually. The volumes now being conveyed by this method are rapidly diminishing and nonunitized working is practised only in areas where labour is plentiful.

Unitized cargoes. Unitization of cargoes permitting larger units of general cargo to be handled by mechanical equipment, so replacing labour, has become attractive. Unitized cargoes can be subdivided as follows:

(1) *Prepackaged.* Certain dry-bulk cargoes, of which sawn timber is one, are packaged into larger standard-sized units for handling in unit sizes ranging up to 5 t. Packaging is usually done using metal strapping.
(2) *Palletized cargoes.* These range from 1 t to 5 t and are suitable for handling by fork-lift trucks. Typical examples are bagged commodities such as cement and flour, and boxed products. Standard pallet sizes, in metres, are as follows:

0.8 × 1.0
0.8 × 1.2
1.0 × 1.2
1.2 × 1.6
1.2 × 1.8

(3) *Flats.* These are usually 3.05 × 2.44 m and 6.10 × 2.44 m capable of carrying up to 10 t. Consignments can be of both regular or irregular shape but require lashing down to the flat. They can be handled by fork-lift trucks or a combination of fork-lifts and low-wheel trailers.
(4) *International Organization for Standardization (ISO) containers.* Standard sizes are usually quoted in tonnes equivalent units (TEUs), and those most commonly in use are:

(a) 3.05 × 2.44 × 2.44 m (maximum load 10 t or 0.5 TEU);
(b) 6.10 × 2.44 × 2.44 m (maximum load 20 t or 1 TEU);
(c) 12.19 × 2.44 × 2.44 m (maximum load 40 t or 2 TEU).

These are sealed units, capable of being lifted from the bottom by fork-lift trucks or from the top at the ISO four-corner lock attachments by cranes and mobile equipment. They are also stackable. Specialized ISO containers have been developed as refrigerated and liquid tank units, but all are to the standardized overall dimensions and equipped with the ISO universal handling devices. Some of these, e.g. refrigerated units, require support services in the way of electrical power whilst in transit through the port.
(5) *Specialized forms.* The introduction of roll-on, roll-off (RoRo) ships allows cargoes in road trailers to be shipped either with or without the traction unit.

26.2.1.2 Bulk cargoes

Bulk cargoes fall into two categories: (1) dry; and (2) liquid. Commodities of these types, more often than not, are shipped in purpose-built vessels or carriers and are loaded and unloaded using specialized berths or terminals equipped with mechanical handling systems suitable for the commodity being handled. Typical commodities are grain, mineral ores, timber, sugar, vegetable oils, mineral oil and petroleum products, liquid chemicals, liquefied petroleum gases (LPG) and liquefied natural gas.

Some of these commodities are hazardous and have to be handled and stored under statutory regulations.

Table 26.1

Vessel type	*Approximate loaded displacement*
Bulk carrier	GRT × 1.2–1.3
Container vessels	DWT × 1.4
Passenger liners	GRT × 1.0–1.1
General cargo	GRT × 2.0 or DWT × 1.4–1.6

26.2.1.3 Miscellaneous trades

There are a number of cargo trades which do not fall readily into the above categories. An example of this is the advent of the car carrier solely handling cars for international distribution.

26.2.2 Sizes and types of vessels to be catered for

26.2.2.1 Classification

Ships are classified under a number of tonnages as follows.

(1) Gross registered tonnage (GRT):	The value derived from dividing the total interior capacity of the vessel by 2.83 m^3, subject to the provisions of applicable laws and regulations.
(2) Net registered tonnage (NRT):	The gross tonnage of the vessel minus the tonnage equivalent of crew cabins, engine-rooms, etc.
(3) Displacement tonnage:	Indicates the total mass of the vessel, and is obtained by multiplying the volume of the displaced sea water by the density of sea water (1.03 t/m^3).
(4) Dead weight tonnage (DWT):	Dead weight of a vessel is the weight equivalent of the displacement tonnage minus the ballasted weight of the vessel. Consequently, it indicates the weight of the cargo, fuel, water and all other items which can be loaded aboard the vessel.
(5) Tonne measurement	The value derived from dividing the cargo spaces of a vessel by 1.13 m^3.

The approximate relationships shown in Table 26.1 apply between the various tonnages. For port engineering purposes, DWT is the most significant although, for calculating berthing energies, the displacement of the vessel is required. The shipping industry uses the long ton. This is almost the same as the metric tonne and for planning purposes can be treated as being interchangeable.

26.2.3 Types of vessels

Vessels are generally categorized by the types of cargo they handle as follows.

(1) *General cargo.* These generally carry nonunitized (break-bulk) cargoes and/or unitized cargoes, but can also carry some containers. These range in size from small coasters (2000–3000 DWT) to long-distance vessels up to 30 000 DWT.
(2) *Container vessels.* These are specially designed ships for the purpose of carrying containers and can vary from small feeder vessels carrying perhaps 150 TEU up to the very large container vessels (used on long sea routes) carrying up to 4000 TEU and being of about 70 000 DWT.

(3) *Roll-on roll-off vessels.* These are specially designed to allow the movement of cargo through stern or bow ramps by vehicular movements without the need for cranes or other lifting devices, and are generally used on the shorter sea routes.
(4) *Bulk-cargo vessels.* These are normally designed specifically for a particular trade, such as iron ore, coal, grain sugar, etc. and can range from small vessels of 20 000 DWT up to large bulk carriers of up to 60 000 DWT.
(5) *Tankers.* These are designed for liquid bulk cargoes and can range from small vessels of 20 000 DWT up to the very large oil tanker of up to 1 million DWT.

Typical relationships of dimensions for various types of vessels are shown in Figures 26.1 to 26.4.

Certain characteristics of vessels may also need to be taken into account. Some vessels are equipped with bow thrusters for ease of manoeuvring, and these have been known to cause damage to quay walls. Problems can also occur with vessels that have bulbous bows, where the projecting bow located below water can cause damage to piled structures.

26.2.3.1 Vessel characteristics

In planning a port development, knowledge of the following characteristics of vessels likely to use the port is required in addition to the dimensions of vessels (length, beam and draft).

(1) Ship layouts, including the locations and dimensions of ramps and hatches, loaded and unloaded deck heights, superstructure positions and clearances for dockside cranes.
(2) Handling characteristics of ships for manoeuvring and turning operations.
(3) Windage areas of ships to assess forces on berths.
(4) Ship mooring line sizes and capacities for bollard pulls.
(5) Deck crane capacities and reaches.

26.2.4 Methods of cargo handling

These will depend largely on the nature of the cargoes and the types of vessels likely to use the port. The most important consideration is whether dockside cranes are required or whether ships' own lifting gear will be used for loading and unloading. Apart from cranes, cargo-handling equipment can range from fork-lift trucks, which can have a capacity from 30 to 400 kN for general cargo, to special container-handling equipment. The latter can be large fork-lift trucks (capacity 200 to 420 kN) straddle carriers and gantry cranes (rubber tyred or on rails).

26.2.5 Land area

This depends on: (1) throughput of cargo; (2) type of cargo; (3) methods of cargo handling; and (4) length of time cargo remains in the port. A modern general cargo berth is normally 200 m long and 200 m or more deep. Thus, an area of 200 × 200 m, or 4 ha, is required. With efficient cargo handling, this will handle approximately 250 000 t of cargo per year. A container berth requires more land behind the berth to maximize the throughput. Container berths are generally 300 m long or greater and with up to 200 to 800 m depth, although this can be reduced if containers are stacked. The area can therefore range up to about 20 ha which would handle up to about 1 million t of cargo per year. However, the land requirements must be investigated for individual cases according to the factors mentioned above. With a general cargo area, part of the land will be utilized by transit sheds and warehousing. In a container berth, the land area will largely be open for storage of containers with sheds for filling and emptying containers, unless these operations are carried out at an inland depot away from the port.

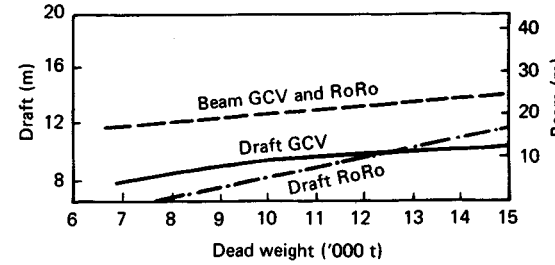

Figure 26.1 Typical general cargo and RoRo vessel dimensions

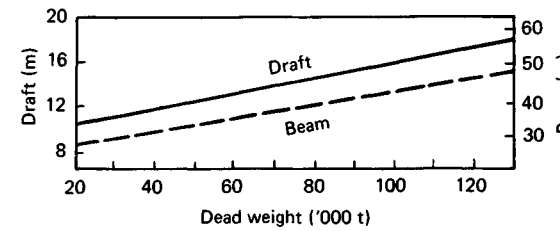

Figure 26.2 Typical oil tanker dimensions

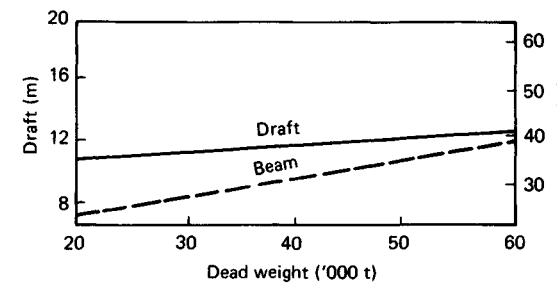

Figure 26.3 Typical ore carrier dimensions

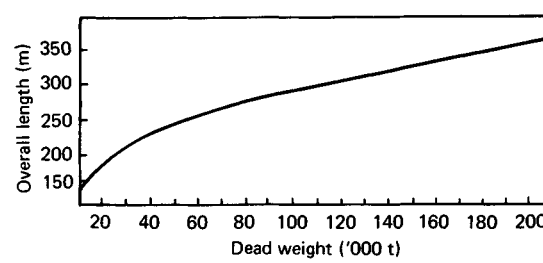

Figure 26.4 Typical lengths for general cargo RoRo vessels, tankers and bulk carriers

26.2.6 Access

Access can be either by road, rail or both; or, in the case of liquid cargoes, by pipeline.

26.2.7 Other considerations

Other factors requiring consideration in the planning of port developments include:

(1) Tugs and pilotage.
(2) Security and policing services.

(3) Fuel bunkering facilities.
(4) Equipment maintenance facilities.
(5) Services to ships – water, electricity, sewerage, telephone.
(6) Rest rooms, canteens and offices, etc.
(7) Post offices.
(8) Customs and immigration arrangements.

26.3 Navigation

The navigation requirements of a harbour involve three aspects: (1) the approach channel; (2) the entrance; and (3) the manoeuvring area within the harbour.

26.3.1 Requirements

26.3.1.1 Channel width

Channel width is governed by many factors, the most important of which may be summarized as follows:

(1) The vessel dimensions; in particular, the beam of the largest vessel using the port.
(2) The orientation and strength of the currents and the exposure to wind and wave action (which can cause vessels to yaw and crab).
(3) The speed and manoeuvrability of the vessels and the expertise of the pilots.
(4) The operating pattern of vessel movements, i.e. whether vessels are allowed to pass or whether a phased one-way system is operated.
(5) The proximity of the vessels to the channel banks (the effect of which is to promote additional yaw).
(6) The channel depth; in particular, the underkeel clearance.

Various methods, including ship deviation studies and scale-model methods, have been employed to assess channel width and various recommendations have been published. British Standard 6349[1] gives the following recommendations.

(1) 4 to 6 × beam: large vessels, one-way traffic only.
(2) 6 to 8 × beam: smaller vessels passing.
(3) 5 to 7 × beam: large tankers.

Other studies have produced recommendations in the form shown in Table 26.2, which gives an example for a design vessel of length L of 260 m and breadth B of 40 m. The manoeuvring lane is defined as that portion of the channel within which the ship may manoeuvre without encroaching on the safe bank clearance and without approaching another ship so closely that dangerous interference between ships would occur. As vessels pass each other, interactive hydrodynamic effects occur as illustrated in Figure 26.5.

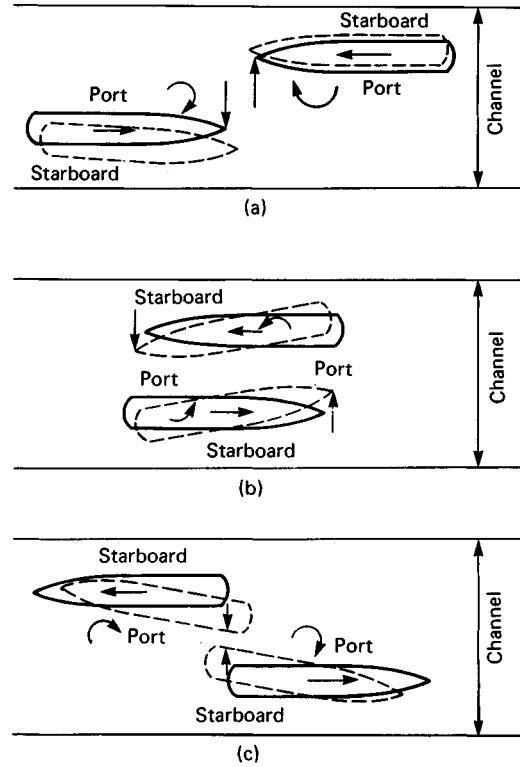

Figure 26.5 Hydrodynamic effects of ships passing in channels. (a) Bows abreast: bows yaw away, but bank suction opposes this tendency (sheer to starboard); (b) bows approach sterns: bows yaw toward low water and the bank suction tends to reinforce this movement (sheer to port); (c) sterns opposite each other: sterns yaw toward low water at sterns but bank suction opposes this tendency

The influence of depth of water on the channel width should not be overlooked as a small underkeel clearance can have a marked effect on the vessel's manoeuvrability and can increase significantly the lane width required.

Where bends are unavoidable in the approach channel, the channel width must be increased at the bend to take into account the extra area swept by the ship during the turning movement. It has not been possible to formulate precise rules for this increased width, but it has been suggested that where the change of heading is of the order of 30 to 45°, the channel width should be increased by at least twice the largest vessel's beam.

Table 26.2

	Manoeuvring lane A	*Bank clearance B*	*Shift clearance C*	*One-way traffic width*	*Two-way traffic width*
Sheltered	A = 2.0 × beam	B = 1.5 × beam	C = 1.0 × beam	A + 2B	2A + 2B + C
Example (m) $L = 260$ $B = 40$	80	60	40	200	320
Exposed location	A = 2 × beam + L sin 10°	B = 1.5 × beam	C = 1.0 × beam	A + 2B	2A + 2B + C
Example (m)	124	60	40	244	408

26.3.1.2 Channel depth

The depth of water available for shipping, whether natural or provided by dredging, is dependent on the variations in water level, the draught of the largest vessel, the change in salinity, the wave- and speed-induced vertical motion of the vessel and the required underkeel clearance. Account may also have to be taken of the accuracy of soundings, the sediment deposited between dredging operations and the dredging tolerances. These are shown diagrammatically in Figure 26.6. Much research has been carried out and recommendations published for minimum underwater keel clearances,[2] but it is advisable for general purposes to provide a depth below low water level of 1.15 times the maximum draught of the vessel, with a minimum gross underwater keel clearance of 1 m. Slightly greater clearances should be provided where the sea-bed is rock in order to increase the clearance for safety of the ship against grounding on a hard surface.

The depth alongside a berth can be slightly less than the channel depth, and in some ports (generally small ones) with high tidal ranges, provision is sometimes made for vessels to sit on the bottom during periods of low tide with access to the berth only during certain periods of the tidal range.

26.3.1.3 Turning circles

It is normally desirable for a ship to be able to manoeuvre within a harbour and to leave the harbour bow first; a sufficient turning area with the necessary depth of water must therefore be provided. For a vessel to turn unassisted in one circular movement the diameter required is ideally 4 times the length of the vessel. With the assistance of tugs a turning circle with a diameter of twice the vessel's length is acceptable. Where turning dolphins or other mooring arrangements, which enable the vessel to swing while partially moored, are provided, this requirement can be reduced further.

26.4 Design of maritime structures

The commonest types of maritime structures are:

(1) *Marginal berth (also termed quay or wharf)*. A berth parallel to the shore and contiguous with it. Figure 26.7 shows a typical layout with three continuous marginal berths.
(2) *Pier*. A finger projection from the shore on which berths are provided (Figure 26.8).
(3) *Jetty*. A structure providing a berth or berths at some distance from the shore. It may be connected to the shore by an approach trestle or causeway, or the jetty may be of an island type (Figure 26.9).
(4) *Dolphin*. An isolated structure or strong point used for manoeuvring a vessel or to facilitate holding it in position at its berth (Figure 26.9).
(5) *Roll-on roll-off ramp*. A structure containing a fixed or adjustable ramp on to which a vessel's ramp is lowered to permit the passage of vehicles between vessel and shore (Figure 26.10).

26.5 Marginal berths

These require a vertical face against which the ship berths and a contiguous working area alongside for cargo-handling equipment and cargo storage. The vertical wall can be achieved by two main methods: (1) a solid wall – which can be a gravity wall or a sheet-piled wall; (2) an open type – piled structure. Both types are commonly used for marginal berths, the choice depending primarily on depth of water, the foundation conditions, and the availability of suitable material for filling behind the solid wall. Typical designs of quay walls for marginal berths are shown in Figure 26.11.

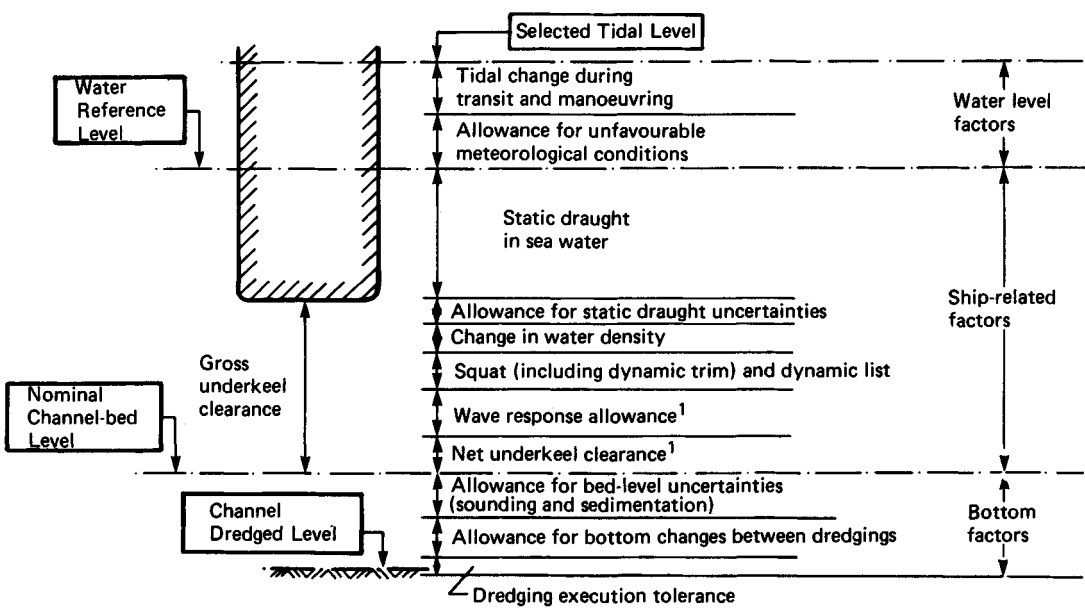

Note 1 Net underkeel clearance and wave response allowance contribute to the manoeuvrability margin

Figure 26.6 Factors determining the required underkeel clearance

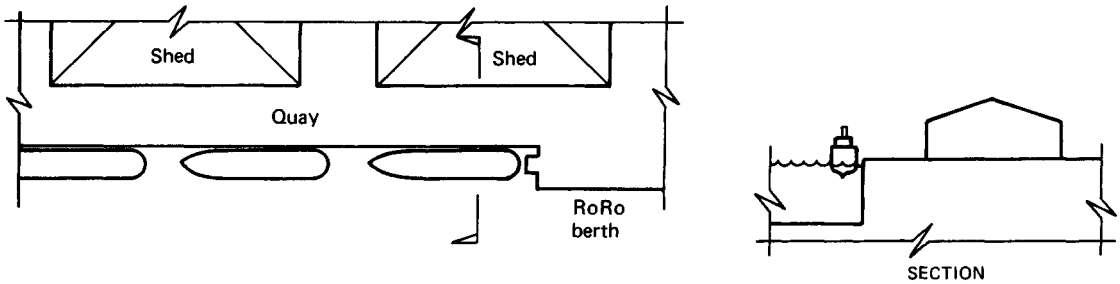

Figure 26.7 Marginal berths

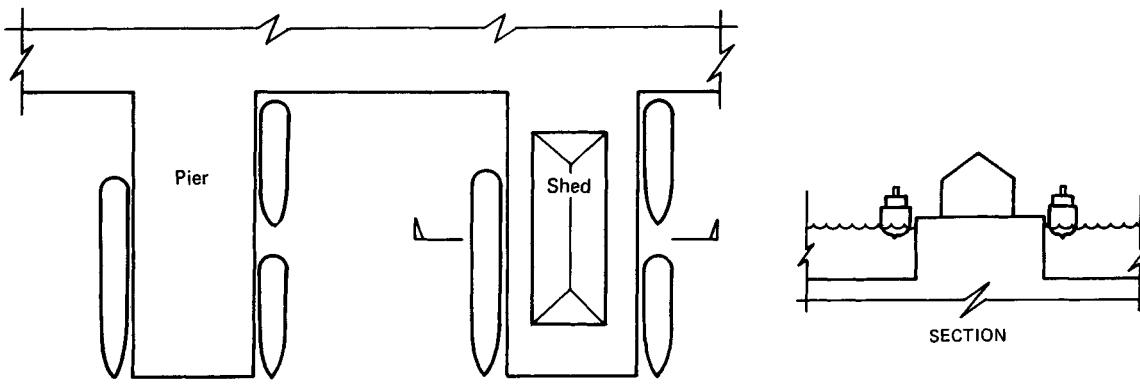

Figure 26.8 Pier berths

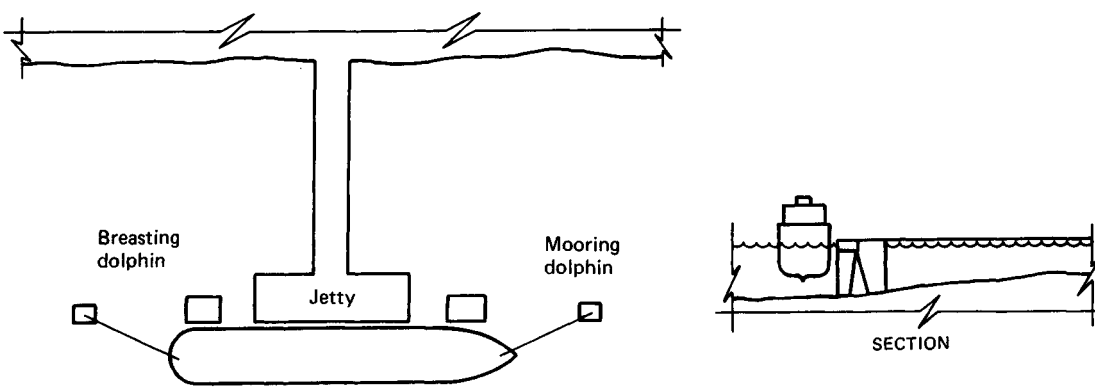

Figure 26.9 Jetty berth

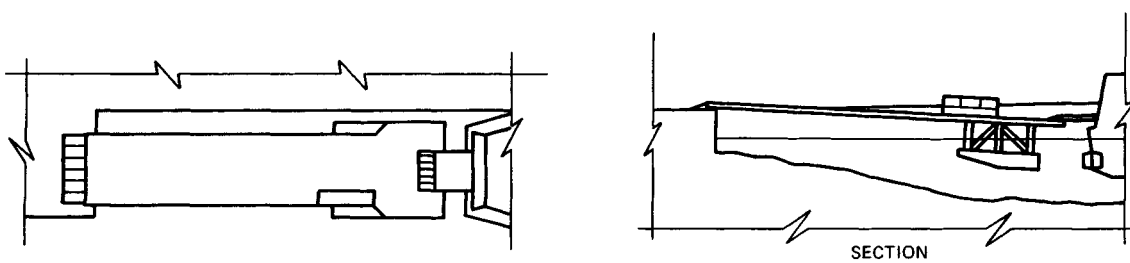

Figure 26.10 RoRo berth

26.6 Piers and jetties

26.6.1 Piers

A pier normally requires a vertical face on both sides against which ships are berthed, with the deck of the pier providing the working area for cargo handling and sometimes cargo storage. The methods of cargo handling and storage determine the width of the pier. If the pier is sufficiently wide, the seaward end of the pier can also be used for berthing ships.

As with marginal berths, the pier can be of a solid type or a suspended structure on piles. Because the pier extends into the seaway, particular consideration needs to be given to its effect on the hydraulic regime and littoral drift. The choice of whether the pier is solid or open will frequently depend on these considerations, although foundation conditions and availability of fill material may also affect the choice. Typical layout showing clearances required between adjacent piers is shown in Figures 26.12 and 26.13.

26.6.2 Jetties

A jetty is a structure providing a berth or berths at some distance from the shore where the required depth of water is available. It consists normally of a jetty head which provides the actual berth, which is connected to the shore by an approach trestle or causeway.

The jetty head should normally be aligned so that the vessel is berthed in the direction of the strongest currents, and is normally an open-piled structure although a solid 'island'-type structure is used occasionally. The approach section is generally built as an open-piled trestle type of structure mainly to avoid affecting the hydraulic regime, and often also on grounds of cost, although in shallow water a solid causeway may be cheaper. In some cases a causeway is used for the first section of the jetty approach from the shore, until the depth of water increases to the point where a piled structure becomes more economical. In determining this point, the life and maintenance costs of the open structures need to be taken into account, as a causeway generally requires very little maintenance.

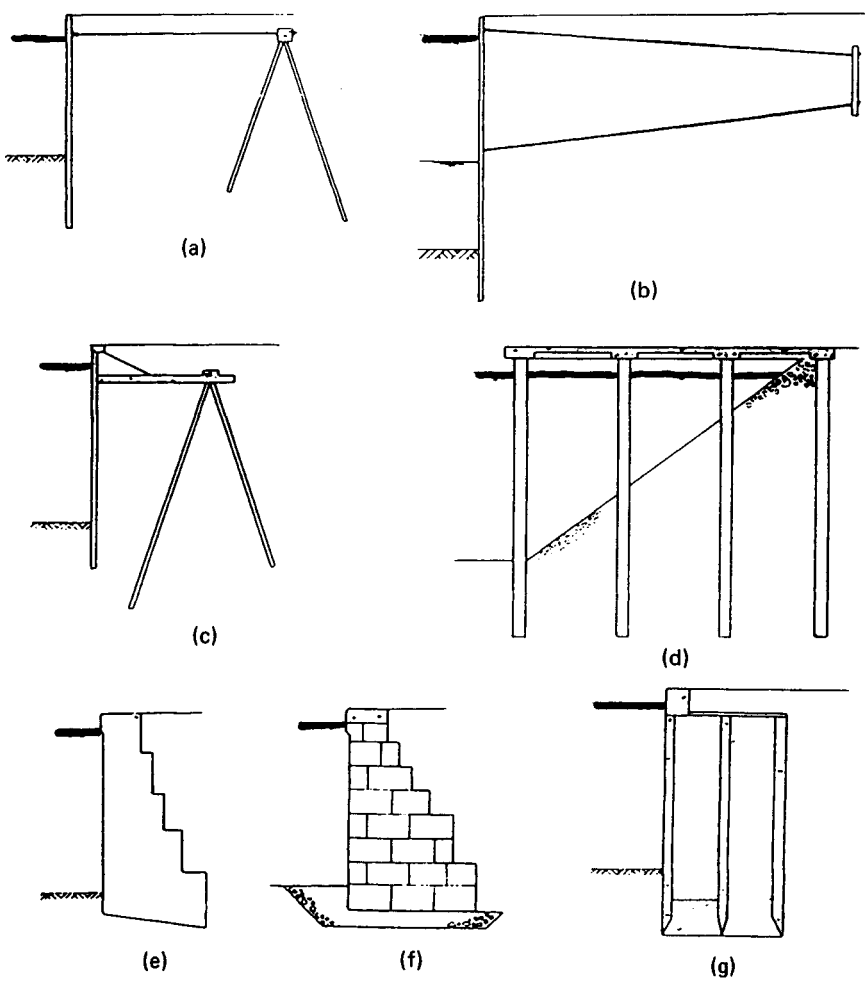

Figure 26.11 Types of quay walls. (a) Anchored sheet pile wall – single tie; (b) anchored sheet pile wall – two ties; (c) sheet pile wall with relieving platform; (d) open-piled construction with suspended deck; (e) concrete wall built in the dry; (f) concrete wall built in the wet; (g) monolith

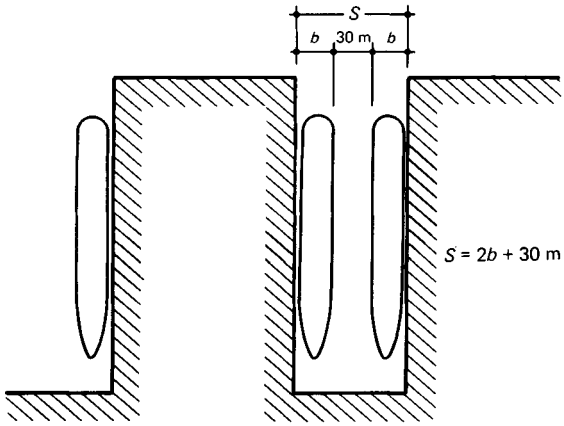

Figure 26.12 Clearances for single-berth piers

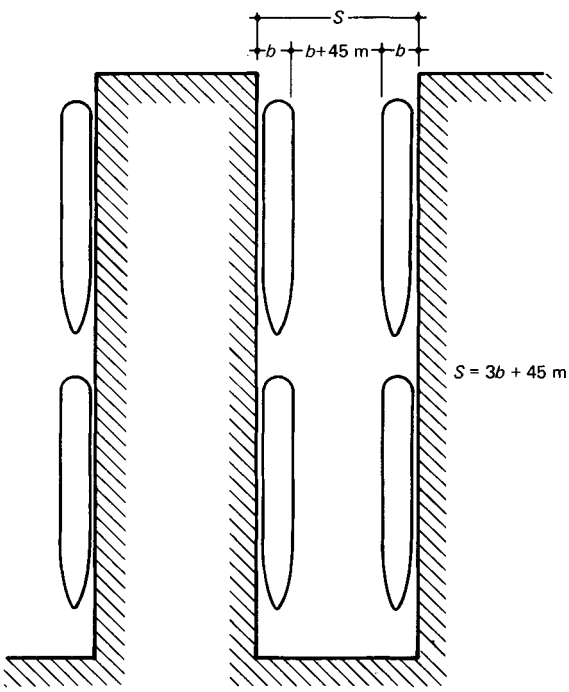

Figure 26.13 Clearances for multi-berth piers

The jetty head is normally smaller than the length of the ship it is designed to handle, and generally requires breasting dolphins and mooring dolphins (see sections 26.7.1 and 26.7.2) for berthing and for maintaining the vessel in position. In such cases the jetty head need not be designed to resist berthing impacts and can be of a lighter construction, designed primarily for vertical loads. A typical oil jetty terminal is shown in Figure 26.14.

26.7 Dolphins

Dolphins are of two kinds: (1) breasting dolphins; and (2) mooring dolphins. The use of both types is shown in Figure 26.14. Turning dolphins are also used occasionally to assist in berthing vessels.

26.7.1 Breasting dolphins

A breasting dolphin is an isolated structure designed to fulfil two distinct functions: (1) it must absorb the kinetic energy of the berthing vessel; and (2) it must assist in restraining the vessel at the berth. The optimum disposition of the breasting dolphins about the main service structure is critical to the design. Two berthing dolphins, one each side of the service platform, are generally sufficient, but if the berth is to be used by ships of widely varying size two additional dolphins closer to the platform may be required. The face line of the dolphins in relation to the front of the service platform will depend on the maximum deflection of the dolphins. To prevent impact between the unprotected platform and the vessel, a gap must be maintained between them when the dolphins are at maximum deflection. The gap must not be so large as adversely to affect the efficient operation of the cargo-handling equipment.

There are two basic types of breasting dolphin: (1) rigid; and (2) flexible. The former will be either a massive structure (such as a blockwork or caisson construction) or an open multiple-pile structure rigidly held together at the top by a massive deck or a steel jacket. Rigid structures simply withstand the berthing load relying on fenders to absorb the energy.

The flexible dolphin usually takes the form of parallel flexible steel tubes (or a single tube), with a high elastic limit, which absorb most of the energy by deflection up to a maximum of 1.5 to 2.0 m.

The choice between a rigid or flexible dolphin will usually be determined by the depth of water and the foundation conditions.

26.7.2 Mooring dolphins

Mooring dolphins are isolated structures to which mooring lines are attached to restrain the ship at the berth. They are not normally subject to impact from a berthing vessel and do not therefore need fendering or to be flexible to absorb energy. They must, however, be designed to resist the horizontal load from the mooring lines over a wide angular range, which arises from both wind and current load on the moored vessel and the ranging of the vessel from wave action. They must also be designed for uplift, to resist the vertical component of the force in the mooring line. They are normally rigid piled structures.

26.8 Roll-on roll-off berths

In parts of the world where tidal ranges are small, RoRo vessels can berth, offload, and load at any state of the tide, bridging the ship-to-shore gap with their own short ramps. Where tidal ranges are large, RoRo vessels must either use impounded docks or more elaborate ship-to-shore ramps must be provided which can tolerate greater differences in level between ship and quay.

Roll-on roll-off ramps can be of three types: (1) fixed at both ends; (2) fixed at one end – floating at ship end; and (3) completely afloat.

Buoyant RoRo ramps differ mainly from their nonbuoyant counterparts in the way their seaward ends are supported. The uplift of a submerged tank is used to carry the dead load instead of a conventional bridge foundation. From this fundamental difference have arisen many characteristics in the structures of buoyant ferry ramps that are uniquely different from those of conventional bridges; these may be seen in Figure 26.15.

The basic design parameters, which include range of water levels, freeboard, quay level, and limiting gradients, define the dimensions of the ramp with very little scope for variation.

The gradient of the ramp must allow vehicles and cargo-handling plant to drive over it at all states of the tide. Limiting gradients are usually dictated by the operators or ferry owners.

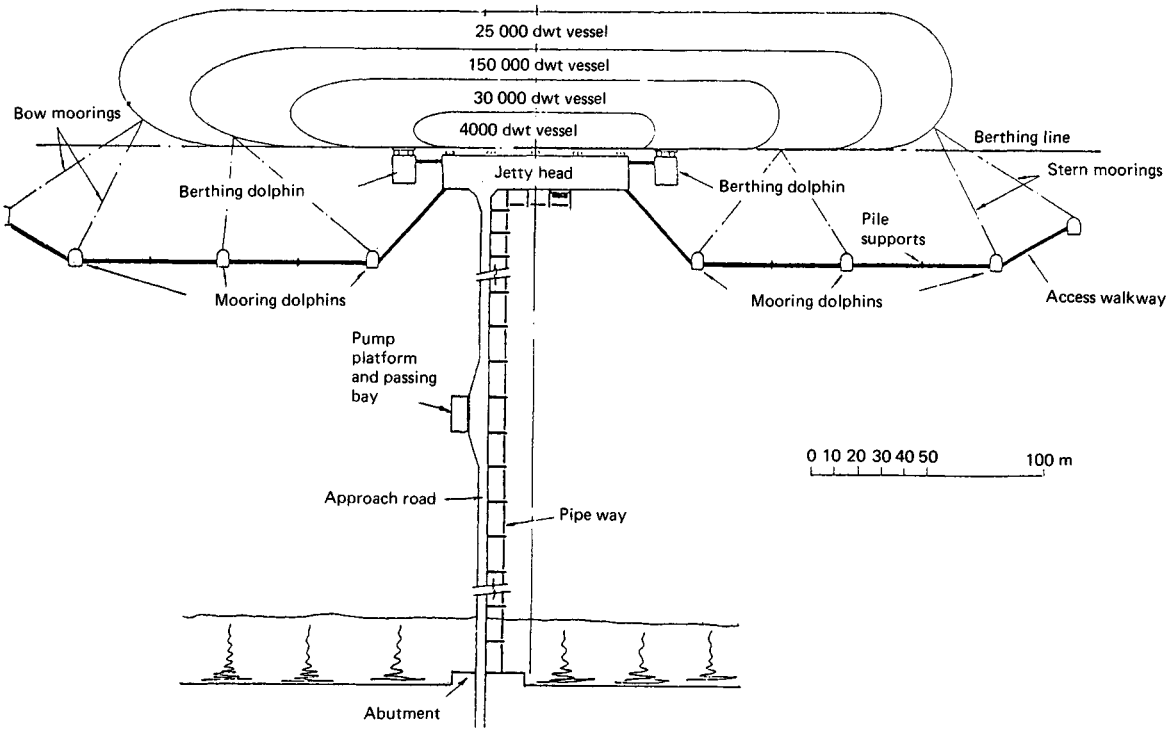

Figure 26.14 Typical plan of oil-jetty berth

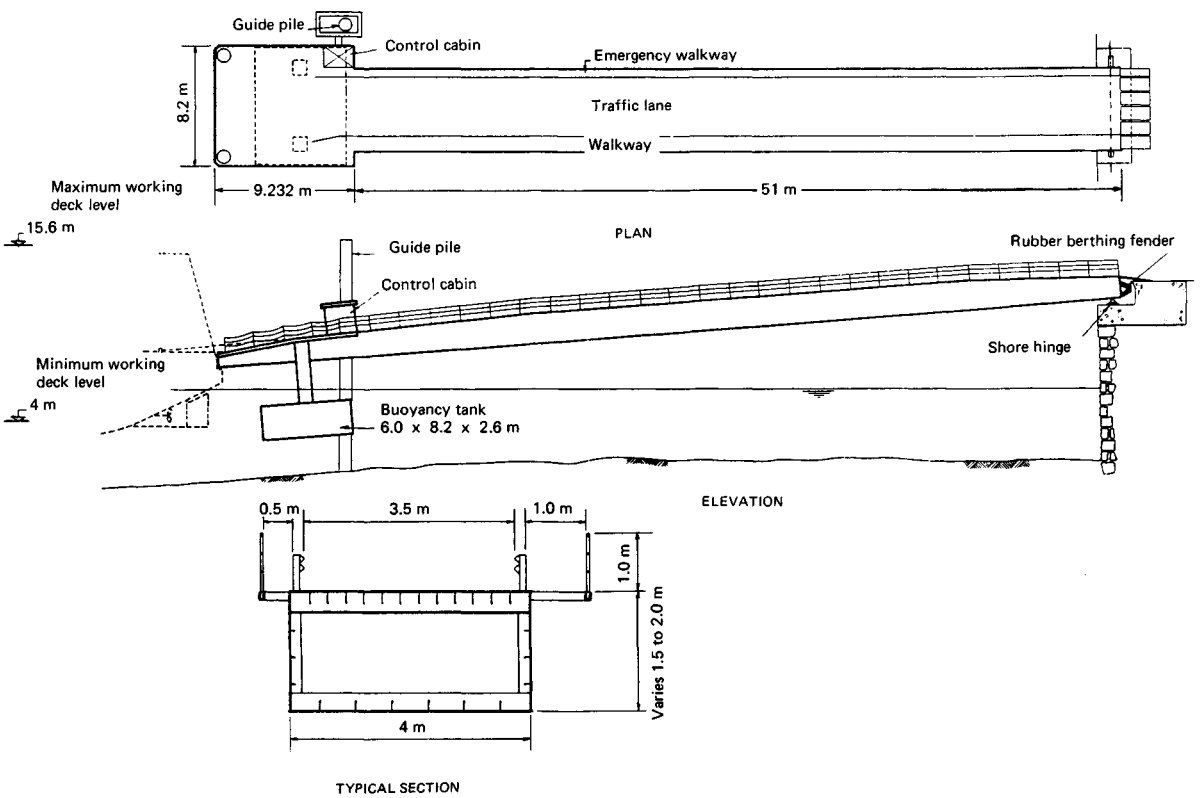

Figure 26.15 Buoyant RoRo ramp

Increased gradients allow shorter ramps with consequent economies of cost and a compromise must be struck. A maximum deck gradient of ± 10% is desirable, but circumstances have led to gradients of as high as 14% because the most economic solution may be not only to keep within the desirable limit on the most frequent tidal conditions, but also to allow steeper gradients on relatively rare occasions.

Considerable ingenuity is required to design ramps so that they are compatible with the very wide range of geometries adopted by ship designers. Harmonizing standards have been suggested, but unification has not yet arrived.

Roll-on roll-off terminals are dependent on being located in reasonably calm waters. In more exposed locations it can be very difficult to ensure that the dynamic wave-generated motion between a floating ramp and ship will not give rise to unacceptable working conditions.

26.9 Loads

In addition to dead loads and soil pressures, the other forces which may act on maritime structures are: (1) those arising from natural phenomena such as wind, snow, ice, temperature variations, currents, waves and earthquake; and (2) those imposed by operational activities such as berthing, mooring, cargo storage and cargo handling. These loads may be grouped conveniently into the following general categories: (1) dead; (2) superimposed dead; (3) imposed; (4) soil and differential water; and (5) environmental.

26.9.1 Dead load

Dead load is defined as the effective weight of the materials and parts of the structure that are structural elements, excluding soils, surfacing, fixed equipment and tracks, etc. For some design analyses it may be preferable to consider the weights of the elements in air and to treat separately the uplift forces due to hydrostatic pressures.

26.9.2 Superimposed dead load

Superimposed dead load is defined as the weight of all materials forming loads on the structure that are not structural elements and would include fill material on a relieving platform, surfacing, fixed equipment for cargo handling, etc.

The effect of removing the superimposed dead load must be considered in any analysis, as it may diminish the overall stability or diminish the relieving effect on another part of the structure.

26.9.3 Imposed load

Imposed loads may be subdivided into:

(1) Static and long-term cyclic.
(2) Cyclic.
(3) Impulsive.
(4) Random.

26.9.3.1 Static loads

Long-term cyclic loads are grouped with static loads where they have such long periods that they act on the structure as static loads. The main imposed loads in this group are: (1) superimposed live load covering cargo storage; (2) cargo handling and transport systems equipment; (3) current loading; and (4) time averaged wind loading. Normal methods of static analysis may be used to calculate the resulting stresses and movements from the imposed loads.

26.9.3.2 Cyclic loads

Cyclic loads are those which repeat in all essential features after regular intervals of time. The main cyclic loads are: (1) wave loading from regular trains of waves; (2) vortex shedding from circular sections in steady currents; (3) vibrations from vehicular traffic and tracked cranage; and (4) vibrating loads from heavy, out-of-balance, rotating machinery fixed to the structure.

26.9.3.3 Impulsive loads

The main impulsive loads are: (1) berthing forces; (2) release or failure of tensioned hawsers; (3) wave-slam forces on horizontal structural members due to the passage of the wave profile through the member; (4) crane snatch-loads when lifting cargo from moving vessels; and (5) vehicular impact and breaking loads from cranes and road and rail traffic. The most significant of these is likely to be berthing impact. Fendering is normally provided to absorb the energy of impact and reduce the load on the structure. The design of fendering is an integral part of the design of all structures subject to berthing impact and is dealt with in section 26.10.

26.9.3.4 Random loads

Random loads vary with time in a nonregular manner. The main random loads are: (1) normal wave loading; (2) loading from wave-induced motion of a moored vessel; (3) seismic loading; and (4) turbulent wind loading. Loading from wave-induced vessel motion is likely to be the most significant of these loads in open-sea conditions. In some cases these loads can be greater than those due to berthing, although they will always be less than berthing loads within a sheltered harbour.

Cyclic, impulsive and random loads are dynamic in value and dynamic analysis may be required to calculate the response of the structures.[3]

26.9.4 Soil and differential water load

These are the dominant loads affecting the stability of an earth-retaining structure. The soil loads should be derived from the properties of the soil. The disturbing forces are affected by the surcharge and imposed loads on the retained soil.

26.9.5 Environmental loads

These include the effects of temperature, snow, ice, waves, current, tide and time-averaged wind. The effects of the latter three are generally considered to be long-term cyclic loads and are grouped with static loads. The others can be cyclic, random or impulsive, according to their nature.

In most cases, the impact live loads are the most important. Typical design loads are given in Table 26.3. It should be borne in mind that many cargoes cause point loads, e.g. corner loads of containers, and also that cargo-handling plant can cause very high wheel loads. These should be obtained from the manufacturers of the plant.

26.10 Fendering

26.10.1 Introduction

Fender systems are designed to protect both the vessel and the breasting structure from damage caused by berthing impacts. They range from timber rubbing-strips fixed to a quay face, to purpose-built, free-standing energy-absorbing structures. The factors determining the type and capacity of a suitable fender system include the nature and size of the berthing vessels, the

Table 26.3

Load	(kN/m²)
Light traffic	5
General traffic	10
General cargo	20
Containers:	
empty, 4-high	15
2-high stacked	20
4-high stacked	30
RoRo cargo	30–50
Multipurpose	50
Offshore supply base	50–150
Paper	55
Forest products	70
Steel products	80
Coal	100–200
Ore	100–300

form of the structure to be protected, the environmental conditions (i.e. wind, waves, currents etc.,) the operational requirements and the consequences of damage to the vessel or structure.

The berthing force is often the predominant lateral load imposed on a quay or jetty structure and its effect is largely controlled by the fender system adopted. The design of the fendering system must therefore form an integral part of the structural design. The selection of the fendering system will often be the first step in the design process and can influence the shape, size and form of structure.

A fendering system may be defined as a structural element or a combination of elements which ensures the safe disposition of a vessel's kinetic energy whilst it berths in a controlled manner. Most systems incorporate an elastic energy-absorbing unit but occasionally a plastic or friable unit is also included, the deformation of which provides additional protection against marginal overloading.

26.10.2 Fendering systems

Fendering systems may be divided into two main categories:

(1) *Detached systems*, in which the berthing forces do not act on the main quay or jetty structure.
(2) *Attached systems*, in which the fender elements are attached to the main quay or jetty structure. The structure then provides the reactive force.

It will generally be found that when the operational, environmental and structural design parameters have been examined it is clear which category should be adopted.

26.10.2.1 Detached fender systems

The category of detached systems may be subdivided into; (1) detached quay fender systems; and (2) breasting dolphins. The main advantage of a detached system is that it permits a lighter main structure to be designed. Also, where the capacity of an existing berth is to be upgraded, a detached fender system may be used to advantage if the existing structures have insufficient strength to withstand the increased berthing loads.

A common example of a detached fender system is a row of free-standing piles (usually steel or timber) driven into the sea- or river-bed in front of the face of the main structure. Berthing energy is absorbed mainly by deflection, the capacity for energy absorption being determined by the size, length, penetration and material properties.

Breasting dolphins are berthing structures independent of the service structure provided for the vessel. Their disposition about the service quay or jetty head is such as to effect the most suitable compromise for the range of vessels envisaged. With flexible dolphins the energy absorption is provided in part by deflection of the entire structure and in part by energy-absorbing units attached to the dolphin face. With a rigid dolphin, all the energy dissipation is achieved by units similar to those used in attached fender systems.

26.10.2.2 Attached fender systems

An attached fender system normally consists of energy-absorbing units bolted to, or suspended from, a quay face or strong points on a jetty. Some types of energy-absorbing units are illustrated in Figure 26.16. Most of the units are made from synthetic rubber and the required energy absorption capacity is achieved by deformation in compression or shear. Some types, such as the hollow cylindrical rubber fenders, the arch type, and pneumatic fenders, can be allowed to make direct contact with the vessel's hull whereas others, such as Hidac, Raykin and cell types require face panels to reduce the contact pressure. The size of the face panel is determined by the permissible hull pressure. Typical attached fender systems are shown in Figure 26.16.

Gravity fenders are those in which kinetic energy is converted to potential energy by means of raising a large mass. They relieve the main structure of the berthing load but impose considerable dead load and a horizontal force depending on the movement of the fender block. The berthing beam principle combines the absorption capacities of cantilevered piles and gravity systems whilst avoiding the dead-load penalty of the latter.

26.10.3 Design of an attached fendering system

The design of an attached system must be integrated with the design of the structure to which it is attached and comprises:

(1) Calculation of energy to be absorbed.
(2) Investigation of alternative systems capable of absorption.
(3) The energy, and calculations of force (see sections 26.10.4 and 26.10.4.2 below), to be resisted by the structure for each alternative.
(4) Investigation of design of structure to resist force of berthing.
(5) Selection of fender system and structure.

In both cases, the calculation of energy to be absorbed is critical to the design.

26.10.4 The basic energy equation

The most generally accepted form of expressing the kinetic energy of a berthing vessel available for absorption by a fender system is:

$$E = 0.5Mv^2 C_E C_M C_S C_c \tag{26.2}$$

where E is the kinetic energy available for dissipation by the fender system, M is the mass of vessel (displacement tonnage), v is the velocity of vessel normal to fender at point of impact, C_E is the eccentricity factor, C_M is the mass factor (coefficient of hydrodynamic mass), C_S is the softness coefficient (stiffness factor) and C_c is the berth configuration coefficient.

26.10.4.1 Design velocity

As the energy varies with the square of the velocity of the

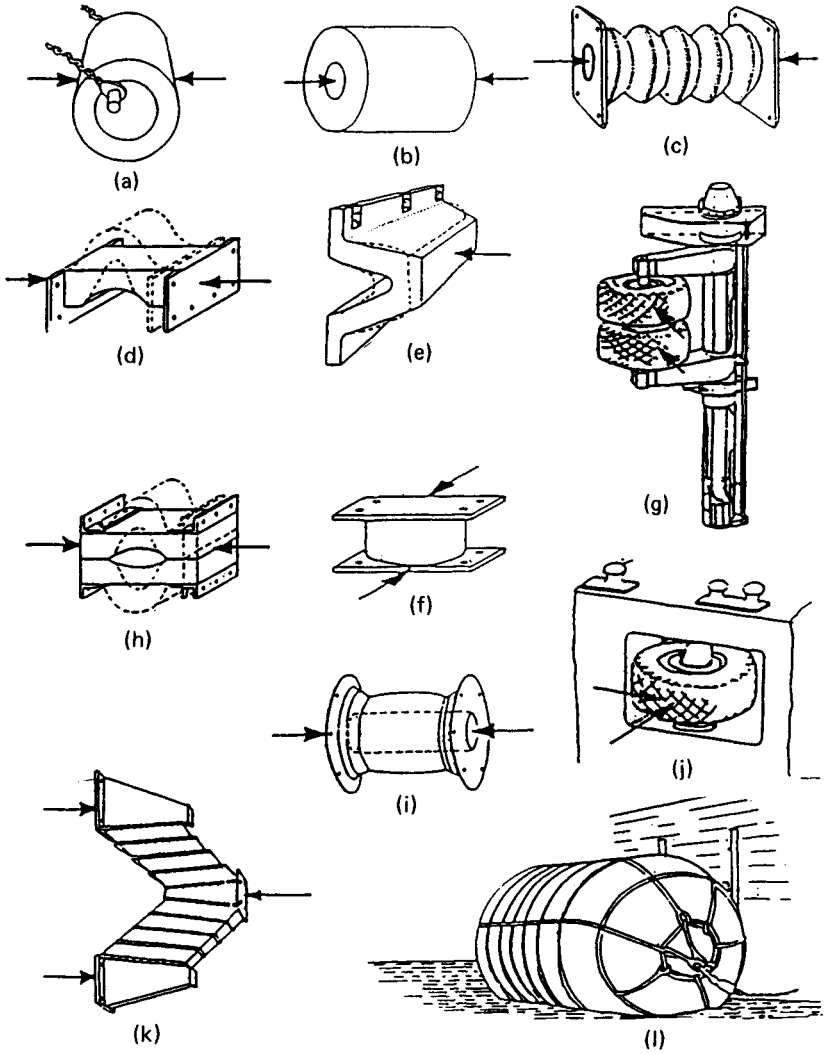

Figure 26.16 Typical replaceable energy-absorbing units

approaching vessel, the choice of the design velocity is most critical. It is, however, unfortunately, one of the most subjective choices in the design of maritime structures, depending as it does on: (1) ship size, type and frequency of arrival; (2) possible constraints on the ship's movement approaching berth; (3) wave conditions likely to be encountered at berthing; (4) current conditions likely to be encountered at berthing; (5) wind conditions likely to be encountered at berthing; (6) the use of tugs; and (7) whether or not speed-of-approach measuring equipment is fitted and used.

Figures suggested in BS 6349[1] are given in Table 26.4. These figures may however need to be modified as necessary to accommodate the local factors.

Table 26.4

Displacement (t)	*Transverse velocity* (m/s)
Up to 2000	0.30
2000–10 000	0.18
10 000–125 000	0.16
Over 125 000	0.14

26.10.4.2 Eccentricity factor C_E

When a berthing vessel makes initial contact at a point remote from its centre of gravity, part of the energy is dissipated by the ensuing rotation. The consequent reduction in required energy absorption capacity in the fender is obtained by applying the eccentricity factor C_E. The eccentricity factor is normally calculated from Equation (26.3) below:

$$C_E = \frac{K^2}{K^2 + R^2} \tag{26.3}$$

where K is the radius of gyration of the ship (generally between $0.2L$ and $0.25L$ where L is the length of the vessel) and R is the distance of the point of impact from the centre of gravity of the vessel.

26.10.4.3 Mass factor C_M

The mass factor C_M takes account of the mass of water

entrained with the moving vessel. This is commonly referred to as the 'hydrodynamic mass'. The sum of the 'hydrodynamic mass' and the displacement gives the 'virtual mass' of the vessel. The mass factor C_M is the ratio of the virtual mass to the displacement. Many attempts have been made to define the hydrodynamic mass mathematically but none has been particularly successful. A value of 1.3 is generally used for C_M. Alternatively, the following simple relationship based on experimental results may be used:

$$C_M = 1 + \frac{2D}{B} \tag{26.4}$$

where D is the vessel's draught and B is the vessel's beam.

26.10.4.4 Softness coefficient C_S

The softness coefficient allows for the portion of the impact energy that is absorbed by the ship's hull. Little research into energy absorption by ships' hulls has taken place, but it has been generally accepted that the value of C_S lies between 0.9 and 1.0. In the absence of more reliable information a figure of 1.0 for C_S is recommended when a soft fendering system is used, and between 0.9 and 1.0 for a hard fendering system.

26.10.4.5 Berth configuration coefficient C_c

The berth configuration coefficient allows for that portion of the ship's energy which is absorbed by the cushioning effect of water trapped between the ship's hull and quay wall. The value of C_c is influenced by the type of quay construction and its distance from the side of the vessel, the berthing angle, the shape of the hull and its underkeel clearance. A value of 1.0 for C_c should be used for piled jetty structures, and a value for C_c of between 0.8 and 1.0 is recommended for use with a solid quay wall.

26.10.5 The factor of safety

Two levels of energy of impact – 'normal' and 'abnormal' – should be established for the design of the fender system and the supporting berth structure.

The berthing energy as computed in accordance with the above formula is based on normal operations and may be exceeded for accidental occurrences such as: (1) engine failure of ship or tug; (2) breaking of mooring or towing lines; (3) sudden changes of wind or current conditions; and (4) human error. To provide a margin of safety against such unquantifiable risks it is recommended that the ultimate capacity of the fenders should be double that calculated for normal impacts.

Because of the nonlinear energy/reaction/deflection characteristics of most fender systems, the effects of both normal and abnormal impacts on the fender system and berth structures should be examined.

26.10.6 Structural considerations

The type of structure to which the fender system is attached is usually dictated by foundation conditions.

In situations where gravity structures such as blockwork walls or caissons are the economical solution it is unlikely that the overall design will be very sensitive to the berthing load, though more detailed factors such as the location of a service duct behind the berthing face or stability of the capping block, may be affected.

Where a piled structure is used, the berthing force may dictate the pile layout. Where a piled structure supports cargo-handling equipment or pipework, unacceptable deflection of the structure rather than overstressing is often found to be the limiting criterion.

In the design of fender support systems it is important that a robust means of restraint is provided against forces acting along the berth face. These forces are produced by friction between the hull and the fender and can reach 50% of the maximum fender reaction.

Consideration must also be given to the structural constraints imposed on the fender designs by the form of construction of the berthing vessel. Berthing loads are generally not considered as a basic design criterion by naval architects.

26.11 Locks

Maritime locks are used to allow vessels to pass between tidal waters and an impounded water area which can be a dock, harbour or ship canal, and enables the impounded water area to be maintained at a constant level, eliminating tidal effects.

In a port that has a large tidal range, locks may be essential to prevent vessels grounding while alongside berths. A constant water level behind a lock also has advantages in that the height of quays depends only on the ship's draught and no account need be taken of tides upstream of the lock. Loading and discharging is also simplified with a constant water level, and normally waves and currents can be disregarded.

26.11.1 Lock dimensions

The usable length of the lock chamber and the width and depth of the sill should be sufficient to ensure that all vessels entering the dock may be safely locked in and out. The level of the outer sill is normally dependent upon the dimension of the approach channel; the level of the inner sill is dependent upon the impounded water level and the maximum vessel draught. Normally a safety margin of 1 m is provided between the ship keel and the sill. A clearance of 10% of the maximum ship beam should be allowed on each side of the vessel. In determining the length of a lock it should be borne in mind that two to six tugs from 25 to 35 m in length may be required depending on the size of the ship and the ship's own manoeuvrability. Approximately 10 m additional length is required for towlines. The length and width of the lock also depends on the number of ships being locked simultaneously.

26.11.2 Lock gates

Lock gates can be caissons, mitre gates or sector gates. For smaller locks, single leaf gates (vertical or horizontal axis) are sometimes used, but these are less common.

Mitre gates are probably the most common type of gates for locks under 30 m wide, as they are generally more economical than other types, mainly because of the less extensive structural work required to house them in the lock heads, but also because in general terms they can be more easily handled for maintenance. Mitre gates obtain their strength largely from the head of water on one side holding them together. However, they have the disadvantage that they can only resist a head of water in one direction. They are not suitable when the tide level outside the lock rises above the impounded level, although it is sometimes found that in such a case it is cheaper to provide an additional pair of mitre gates rather than to use other types. Mitre gates also have the disadvantage that they are likely to vibrate where there is only a small hydraulic head holding them together. In smaller locks, such as those in marinas, it is generally found that radial sector gates or delta gates are the most suitable.

26.12 Pavements

Pavements in port areas which are used by cargo-handling plant

are generally subjected to much higher loads and much greater repetition of loading than normal road pavements. They are also susceptible to damage from the plant itself, e.g. the lifting prongs attached to fork-lift trucks. The bearing capacity of the subsoil determines the pavement design to a large extent. Surfacing used for pavements can be either:

(1) *Flexible*: asphalt – normally expensive concrete blocks – easily maintained.

(2) *Rigid*: concrete – subject to cracking under high concentrated loads. Precast concrete rafts – if settlement occurs they can be lifted, the ground made up to level, and the rafts realigned.

The design of heavy-duty pavements is still semi-empirical. The British Ports Association has produced a manual of design charts[4] suitable for the design of pavements for cargo-handling plant currently in use with a wide range of soil conditions.

For low-cost storage areas for containers, gravel surfacings have been used in some ports.[5]

Grades and consequent drainage patterns should avoid excessive and frequent peaks and valleys. Large open expanses without grade breaks are needed for ground stacking. Pavement slopes should be held at 1 to 1.5% maximum.

26.13 Durability and maintenance

It is well known that the marine environment is one of the most severe as far as deterioration of materials is concerned. In addition to this, durability can be drastically affected by the location of the structure. Some of the factors affecting durability are:

(1) Temperature of the sea.
(2) Air pollution. It has been found, for example, that the rate of corrosion of galvanized steel can vary by a factor of 10:1 in different parts of the UK due to air pollutants.
(3) Pollution of the sea. This is sometimes dependent on the use of the berth, e.g. at a fertilizer terminal, where chemical compounds can find their way into the sea, and the rate of corrosion is much higher than in unpolluted sea water.

The factors affecting durability and repairs of reinforced concrete in the marine environment are well documented elsewhere[5,6] but marine structures should be robust, avoiding thin sections and with a minimum cover to reinforcement of 50 mm. For greater protection against corrosion, galvanized or coated steel may be used or cathodic protection applied to the reinforcement.

The part of a structure most susceptible to corrosion or deterioration is the area in the tidal zone or splash zone, and special consideration needs to be given to this area. With steel piles, concrete muffs are frequently provided from the underside of the concrete deck to just below low-water level; steel sheet piling is frequently encased in concrete from cope level to below low-water level.

Durability is normally considered at the design stage, but maintenance has an equally important effect on the life of structures, and should also be considered at the design stage.

There are two kinds of maintenance: (1) preventive; and (2) remedial. Methods of both types of maintenance are well known. The principal preventative methods are protective coatings and cathodic production – both need to be considered and incorporated where appropriate at the design stage. From the designer's point of view it is important also to recognize how maintenance will be carried out and to design for simplicity in the provision of maintenance procedures. If the maintenance methods are straightforward they are far more likely to be carried out than if access is difficult, or if complicated plant or equipment is required.

References

1 British Standards Institution (1984–1985) *Code of practice for maritime structures*. BS 6349 Parts 1, 2 and 4. BSI, Milton Keynes.
2 Permanent International Association of Navigational Congresses (1985) *Underkeel clearance for large ships in maritime fairways with hard bottoms*. PIANC Supplement to Bulletin No. 51.
3 Construction Industry Research and Information Association (1977) *Dynamics of marine structures. Methods of calculating the dynamic response of fixed structures subject to wave and current action*. CIRIA Report No. UR8 Underwater Engineering Group, London.
4 British Ports Association (1982) *The structural design of heavy-duty pavements for ports and other industries*. BPA, London.
5 Institution of Civil Engineers (1986) *Maritime and offshore structure maintenance*. Thomas Telford, London.
6 Construction Industry Research and Information Association (1986) *Influence of methods and materials on the durability of repairs to concrete coastal and offshore structures*. UEG Publication No. UR36, Underwater Engineering Group, CIRIA, London.

Bibliography

American Association of Port Authorities (n.d.), *Port designs and construction*, AAPA, Washington, D.C.

American Iron and Steel Institution (1981) *Handbook of corrosion protection for steel pile structures in marine environments*. AISI, Washington, D.C.

American Society of Civil Engineers (1974) *Port structure costs: a report by the task committee on port structure costs*, Committee on Ports and Harbours, ASCE Waterways, Harbours and Coastal Engineering Division, New York.

Cornick, H. F. *Dock and harbour engineering*. Charles Griffin, London.

Department of Transport (1982) *Ship behaviour in ports and their approaches*. HMSO, London.

Fuhrer, M. and Romisch, K. (1983) Contribution to the design of fenders and dolphins. *8th International Harbour conference, Antwerp*.

Gulf Publishing Company (n.d.) *Port engineering*. GPC, Houston.

Ministry of Transport, Japan (1980) Technical standards for ports and harbour facilities in Japan. Bureau of Ports and Harbours.

National Ports Council (1920) *Port structures – an analysis of costs and designs of quay walls, locks and transit sheds*. NPC, London.

National Ports Council (1978) *Containers – their handling and transport. A survey of current practice*. NPC, London.

Permanent International Association of Navigational Congresses (1978) *Standardization of ro-ro ship and berth*. International Study Commission Report, PIANC, Geneva.

Permanent International Association of Navigational Congresses (1985) *Port maintenance handbook*. Supplement to Bulletin No. 50, PIANC, Geneva.

Permanent International Association of Navigational Congresses (1987) *Final report of the International Commission for the Study of Locks*. Supplement to Bulletin No. 55, PIANC, Geneva.

Permanent International Association of Navigational Congresses (1987) *Development of modern marine terminals*. Supplement to Bulletin No. 56, PIANC, Geneva.

Recommendations of the Committee for Waterfront Structures (1982) 4th English edition (translated from the 6th German Edition). Sohn.

United Nations (1985) *Port development – a handbook for planners in developing countries*. UN, New York.

US Army Corp of Engineers (1974) *Small craft harbours; design construction and operation*, Coastal Engineering Research Center, Special Report No. 2.

Vrijer, A. (1983) 'Fender forces caused by ship impacts'. *8th international harbour conference*, Antwerp.