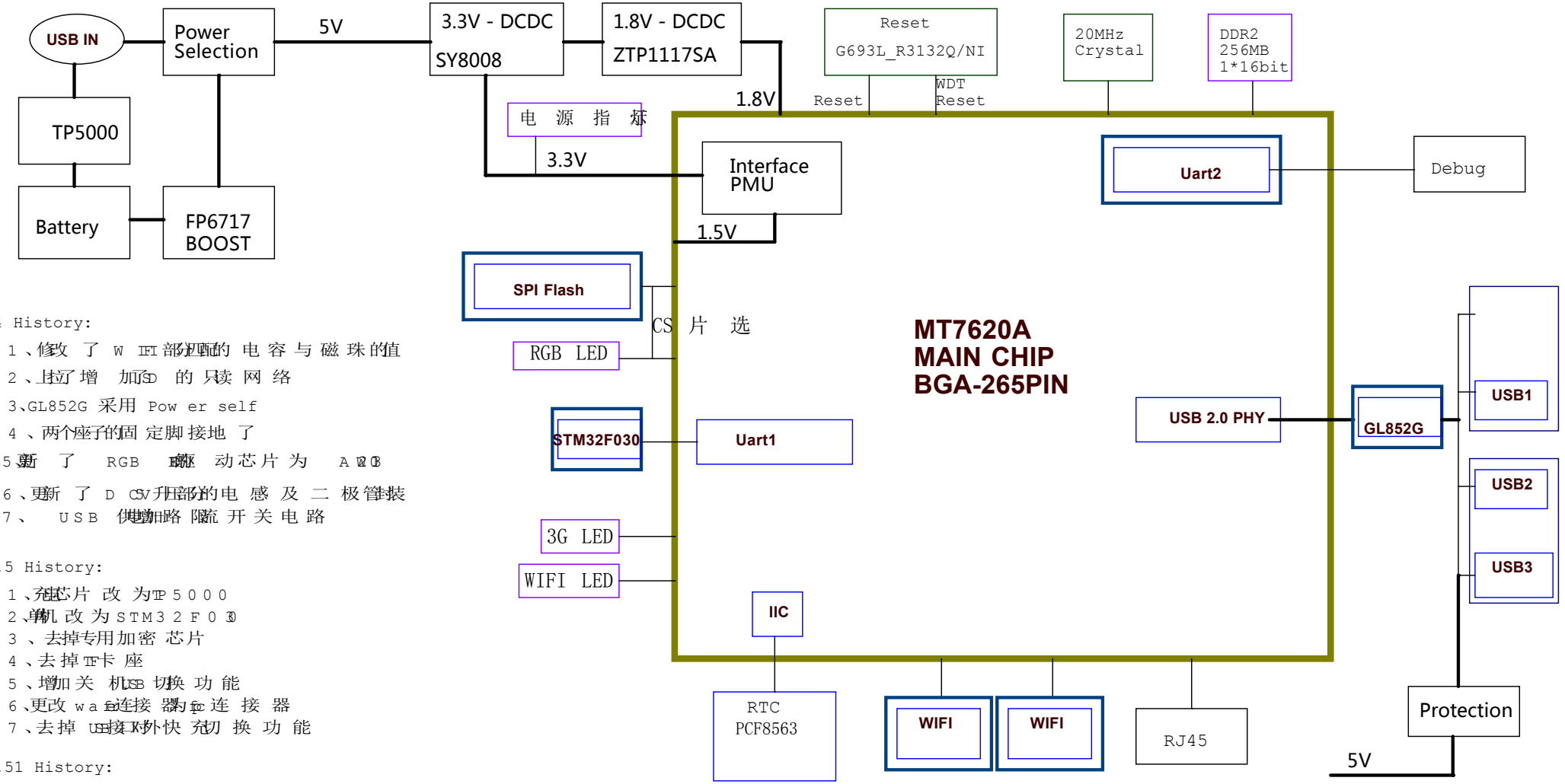

V1.4 History:

1、修改了WIFI部分的电容与磁珠的值
2、去掉了增加SD的只读网络
3、GL852G采用Power self
4、两个座子的固定脚接地了
5、更新了RGB驱动芯片为A2003
6、更新了DCDC升压部分的电感及二极管封装
7、USB供电路限流开关电路

V1.5 History:

1、充电芯片改为TP5000
2、单机改为STM32F030
3、去掉专用加密芯片
4、去掉TF卡座
5、增加关机USB切换功能
6、更改wafer连接器为fpc连接器
7、去掉USB接对外快充切换功能

V1.51 History:

1、去掉MCU Crystal选取

Focalcrest, Co. Ltd.		
Design Name: WIUSB		
Size: B	Page Name: 01 BLOCK-INDEX	Rev: v1.5
Date: Thursday, July 21, 2016	Sheet 1 of 12	

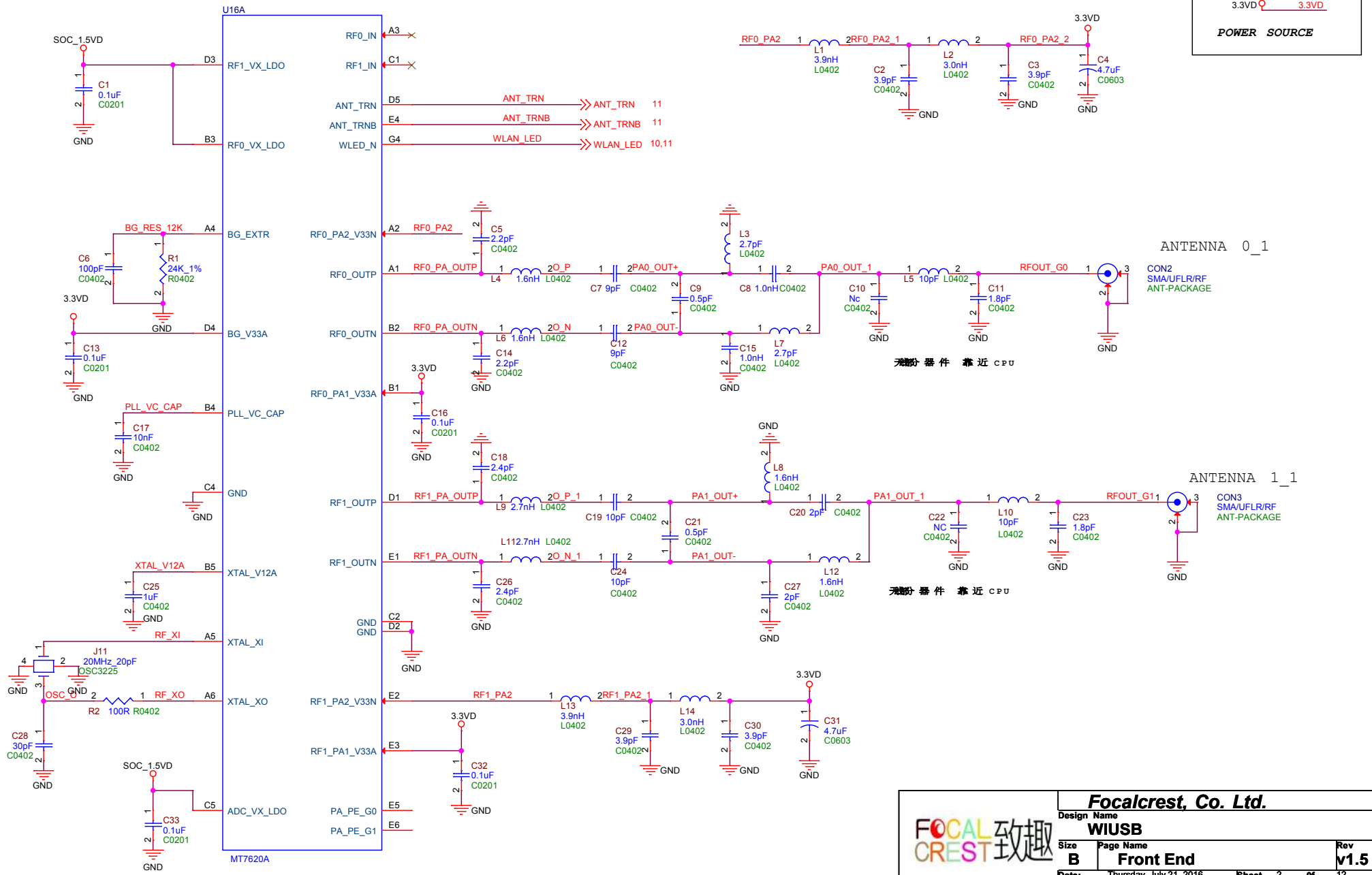
SOC_1.5VD
SOC_1.5VD
3.3VD
3.3VD
POWER SOURCE
U16A
MT7620A
RF0_IN
RF1_IN
ANT_TRN
ANT_TRNB
WLED_N
RF0_VX_LDO
RF1_VX_LDO
BG_EXTR
BG_V33A
PLL_VC_CAP
XTAL_V12A
XTAL_XI
XTAL_XO
ADC_VX_LDO
RF0_PA2_V33N
RF0_OUTP
RF0_OUTN
RF0_PA1_V33A
RF1_OUTP
RF1_OUTN
RF1_PA2_V33N
RF1_PA1_V33A
PA_PE_G0
PA_PE_G1
GND
RF0_PA2
RF0_PA2_1
RF0_PA2_2
L1 3.9nH L0402
L2 3.0nH L0402
L3 2.7pF L0402
L4 1.6nH L0402
L5 10pF L0402
L6 1.6nH L0402
L7 2.7pF L0402
L8 1.6nH L0402
L9 2.7nH L0402
L10 10pF L0402
L12 1.6nH L0402
L13 3.9nH L0402
L14 3.0nH L0402
L112.7nH L0402
C1 0.1uF C0201
C2 3.9pF C0402
C3 3.9pF C0402
C4 4.7uF C0603
C5 2.2pF C0402
C6 100pF C0402
C7 9pF C0402
C8 1.0nH C0402
C9 0.5pF C0402
C10 Nc C0402
C11 1.8pF C0402
C12 9pF C0402
C13 0.1uF C0201
C14 2.2pF C0402
C15 1.0nH C0402
C16 0.1uF C0201
C17 10nF C0402
C18 2.4pF C0402
C19 10pF C0402
C20 2pF C0402
C21 0.5pF C0402
C22 NC C0402
C23 1.8pF C0402
C24 10pF C0402
C25 1uF C0402
C26 2.4pF C0402
C27 2pF C0402
C28 30pF C0402
C29 3.9pF C0402
C30 3.9pF C0402
C31 4.7uF C0603
C32 0.1uF C0201
C33 0.1uF C0201
R1 24K_1% R0402
R2 100R R0402
J11 20MHz_20pF OSC3225
ANT_TRN 11
ANT_TRNB 11
WLAN_LED 10,11
BG_RES_12K
RF_XI
RF_XO
PA0_OUT+
PA0_OUT-
PA0_OUT_1
PA1_OUT+
PA1_OUT-
PA1_OUT_1
RFOUT_G0
RFOUT_G1
CON2 SMA/UFLR/RF ANT-PACKAGE
CON3 SMA/UFLR/RF ANT-PACKAGE
ANTENNA 0_1
ANTENNA 1_1
元器件靠近CPU
元器件靠近CPU
Focalcrest, Co. Ltd.
Design Name WIUSB
Size B
Page Name Front End
Rev v1.5
Date: Thursday, July 21, 2016
Sheet 2 0f 12

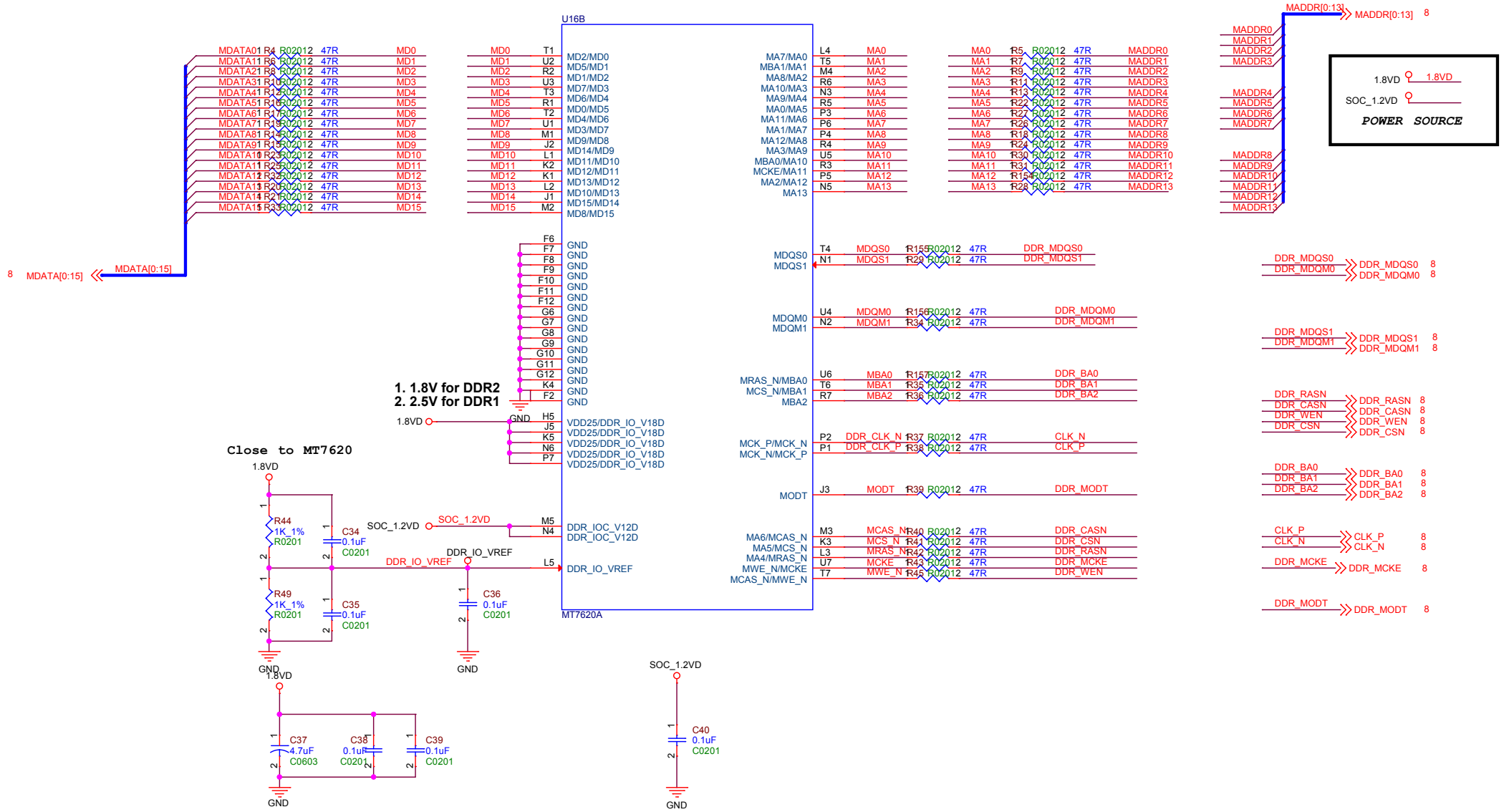

Design Name	WIUSB
Size	B
Page Name	DDR
Rev	v1.5
Date:	Thursday, July 21, 2016
Sheet	3 of 12

Focalcrest, Co. Ltd.

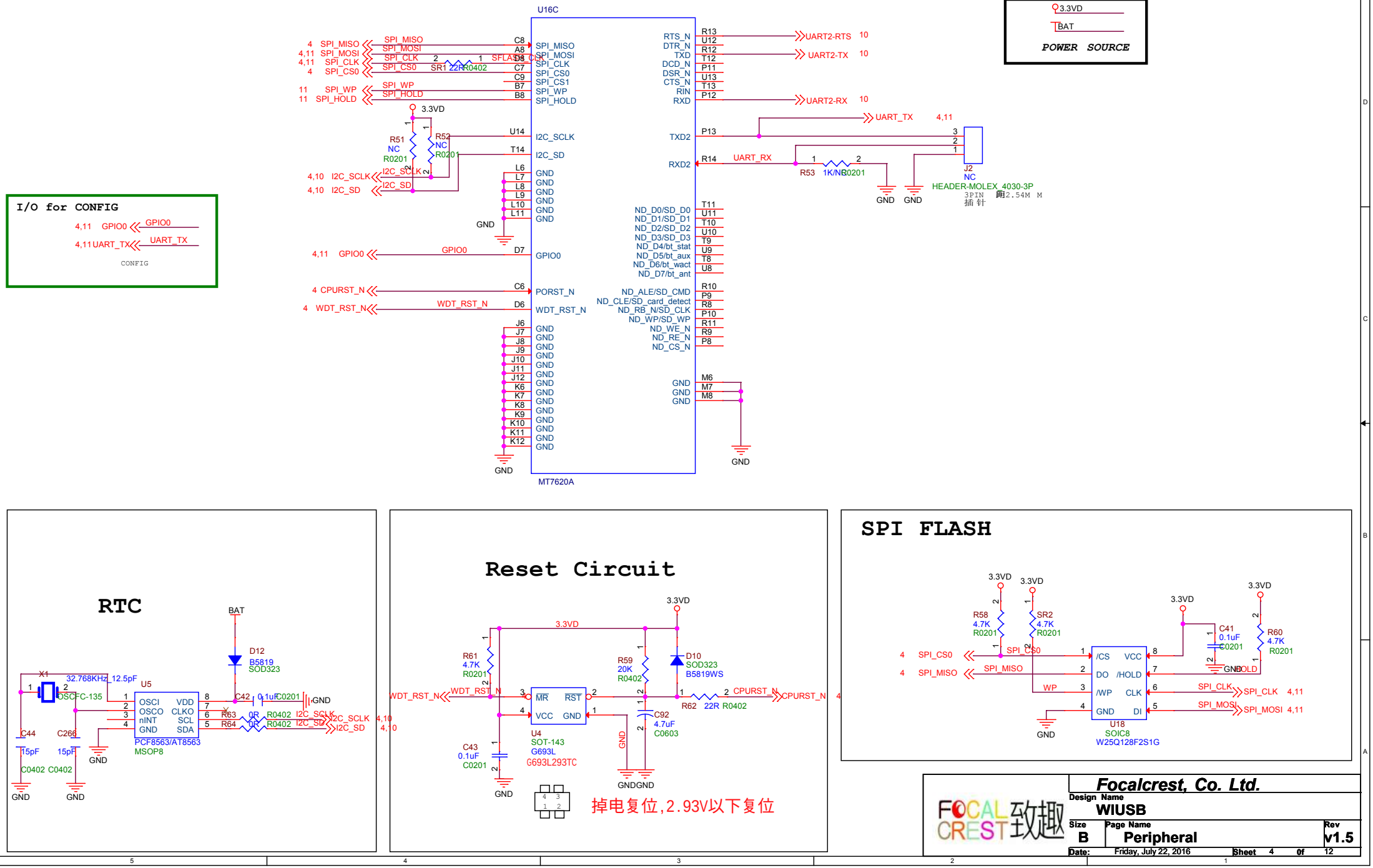
U16C
MT7620A
SPI_MISO
SPI_MOSI
SPI_CLK
SPI_CS0
SPI_CS1
SPI_WP
SPI_HOLD
SFLASH_CLK
I2C_SCLK
I2C_SD
GPIO0
PORST_N
WDT_RST_N
RTS_N
DTR_N
TXD
DCD_N
DSR_N
CTS_N
RIN
RXD
UART2-RTS
UART2-TX
UART2-RX
UART_TX
UART_RX
TXD2
RXD2
ND_D0/SD_D0
ND_D1/SD_D1
ND_D2/SD_D2
ND_D3/SD_D3
ND_D4/bt_stat
ND_D5/bt_aux
ND_D6/bt_wact
ND_D7/bt_ant
ND_ALE/SD_CMD
ND_CLE/SD_card_detect
ND_RB_N/SD_CLK
ND_WP/SD_WP
ND_WE_N
ND_RE_N
ND_CS_N
3.3VD
BAT
POWER SOURCE
I/O for CONFIG
CONFIG
HEADER-MOLEX_4030-3P
RTC
PCF8563/AT8563
MSOP8
32.768KHz_12.5pF
OSCFC-135
B5819
SOD323
Reset Circuit
MR
RST
VCC
GND
SOT-143
G693L
G693L293TC
SOD323
B5819WS
掉电复位,2.93V以下复位
SPI FLASH
/CS
VCC
DO
/HOLD
/WP
CLK
GND
DI
SOIC8
W25Q128F2S1G
Focalcrest, Co. Ltd.
Design Name
WIUSB
Size
B
Page Name
Peripheral
Rev
v1.5
Date:
Friday, July 22, 2016
Sheet 4 0f 12

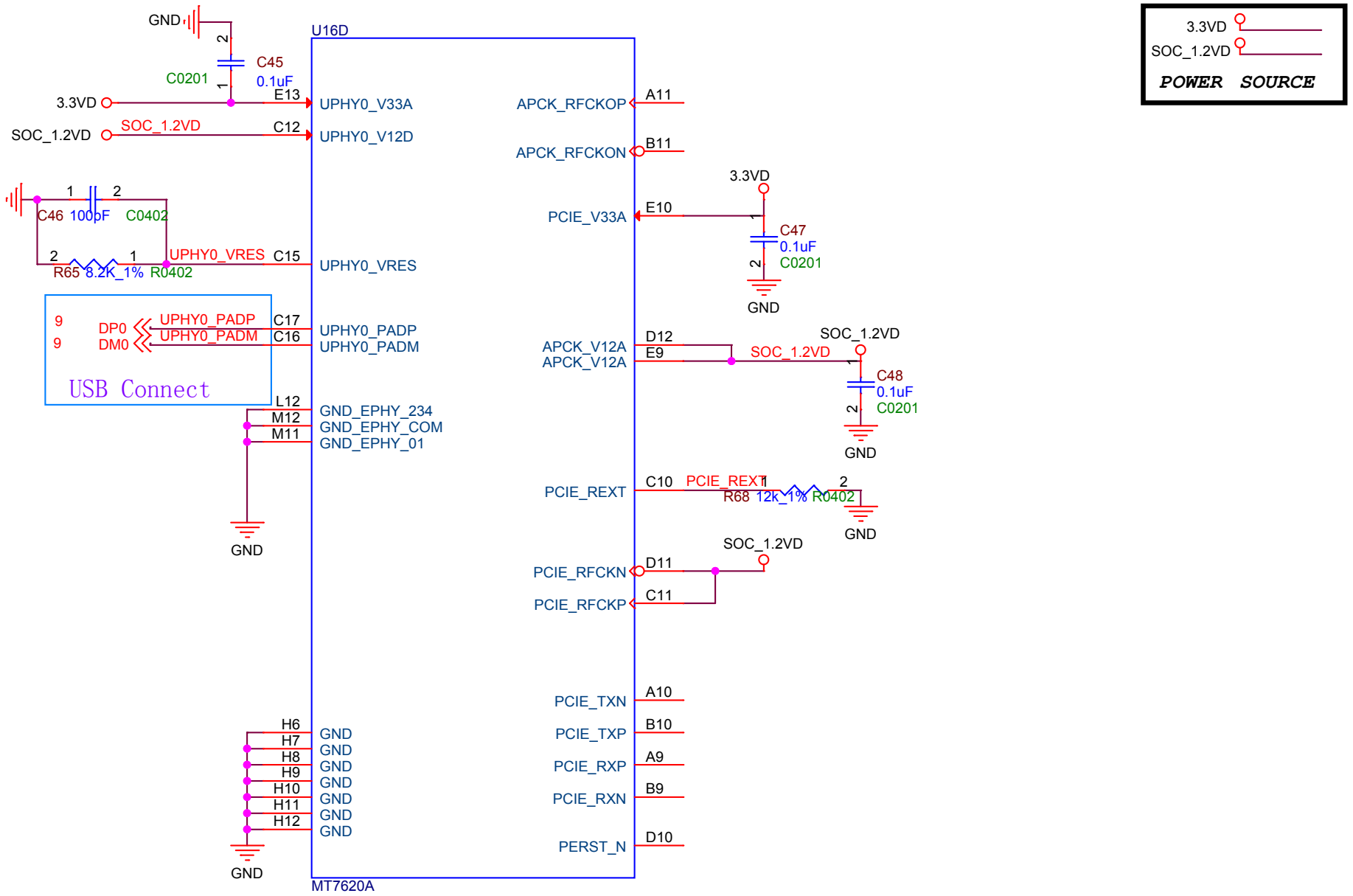

FOCAL CREST 致趣	Focalcrest, Co. Ltd.	
	Design Name: WIUSB	
Size: A	Page Name: USB&PCIE	Rev: v1.5
Date: Thursday, July 21, 2016	Sheet 5 of 12	

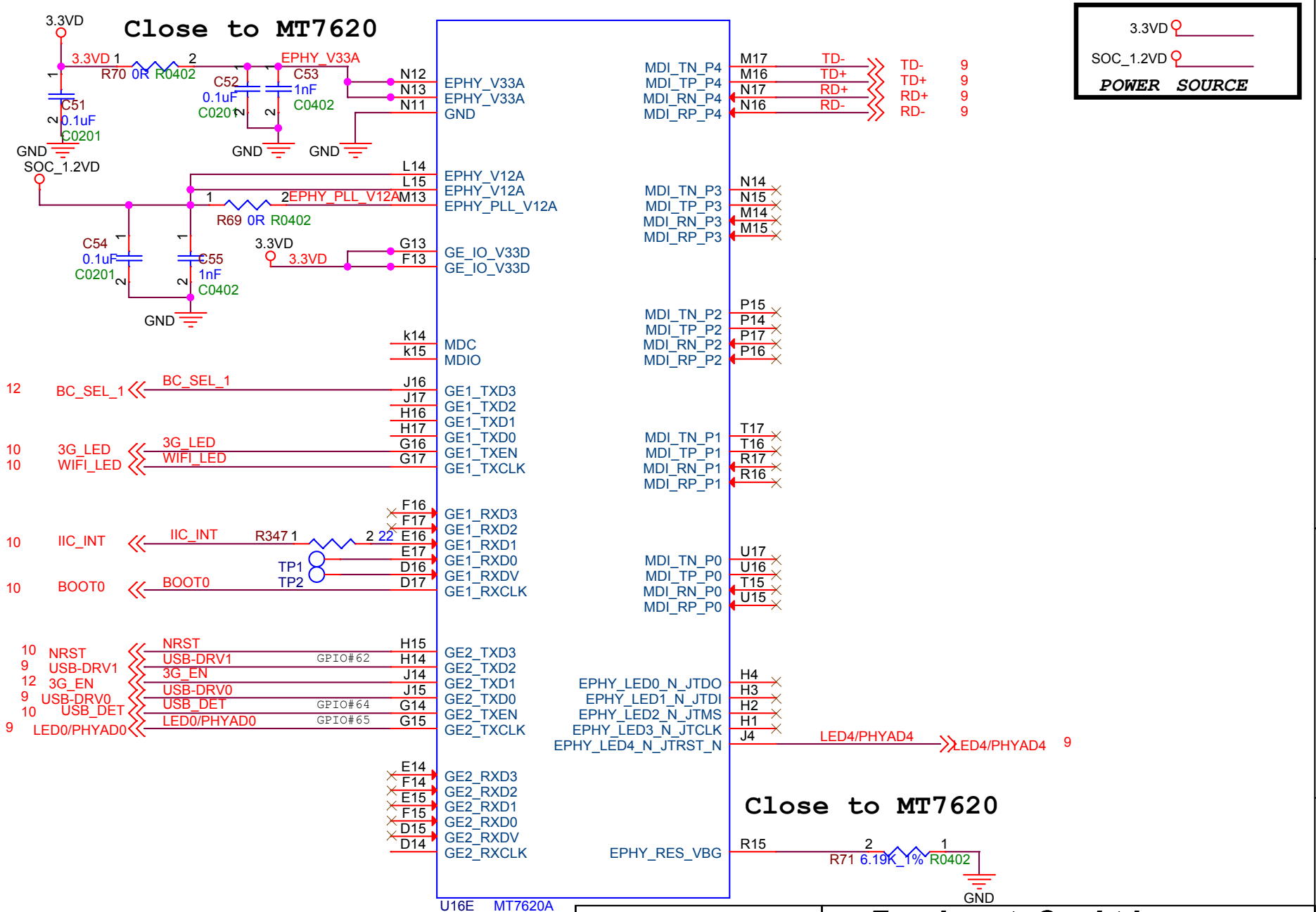
Close to MT7620
3.3VD
SOC_1.2VD
GND
R70 0R R0402
R69 0R R0402
C51 0.1uF C0201
C52 0.1uF C0201
C53 1nF C0402
C54 0.1uF C0201
C55 1nF C0402
EPHY_V33A
EPHY_V12A
EPHY_PLL_V12A
GE_IO_V33D
MDC
MDIO
BC_SEL_1
3G_LED
WIFI_LED
IIC_INT
R347 22
TP1
TP2
BOOT0
NRST
USB-DRV1
3G_EN
USB-DRV0
USB_DET
LED0/PHYAD0
GPIO#62
GPIO#64
GPIO#65
GE1_TXD3
GE1_TXD2
GE1_TXD1
GE1_TXD0
GE1_TXEN
GE1_TXCLK
GE1_RXD3
GE1_RXD2
GE1_RXD1
GE1_RXD0
GE1_RXDV
GE1_RXCLK
GE2_TXD3
GE2_TXD2
GE2_TXD1
GE2_TXD0
GE2_TXEN
GE2_TXCLK
GE2_RXD3
GE2_RXD2
GE2_RXD1
GE2_RXD0
GE2_RXDV
GE2_RXCLK
MDI_TN_P4
MDI_TP_P4
MDI_RN_P4
MDI_RP_P4
MDI_TN_P3
MDI_TP_P3
MDI_RN_P3
MDI_RP_P3
MDI_TN_P2
MDI_TP_P2
MDI_RN_P2
MDI_RP_P2
MDI_TN_P1
MDI_TP_P1
MDI_RN_P1
MDI_RP_P1
MDI_TN_P0
MDI_TP_P0
MDI_RN_P0
MDI_RP_P0
EPHY_LED0_N_JTDO
EPHY_LED1_N_JTDI
EPHY_LED2_N_JTMS
EPHY_LED3_N_JTCLK
EPHY_LED4_N_JTRST_N
LED4/PHYAD4
EPHY_RES_VBG
R71 6.19K_1% R0402
TD-
TD+
RD+
RD-
U16E MT7620A
3.3VD
SOC_1.2VD
POWER SOURCE
Close to MT7620
Focalcrest, Co. Ltd.
Design Name
WIUSB
Size
A
Page Name
Ethernet
Rev
v1.5
Date: Thursday, July 21, 2016
Sheet 6 0f 12

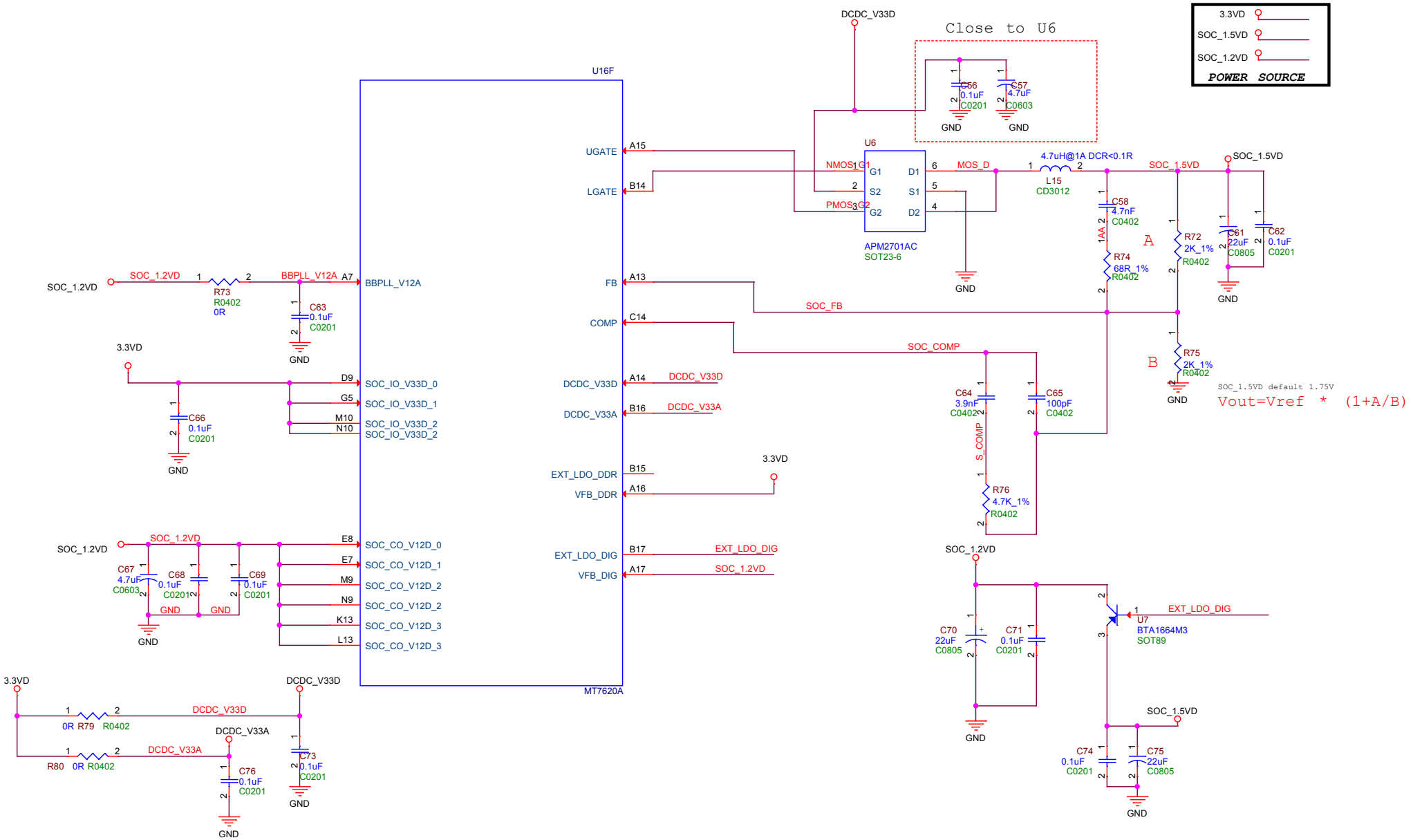

Focalcrest, Co. Ltd.			
Design Name: WIUSB			
Size: B	Page Name: MT7620 Power		Rev: v1.5
Date: Thursday, July 21, 2016	Sheet 7 of 12		

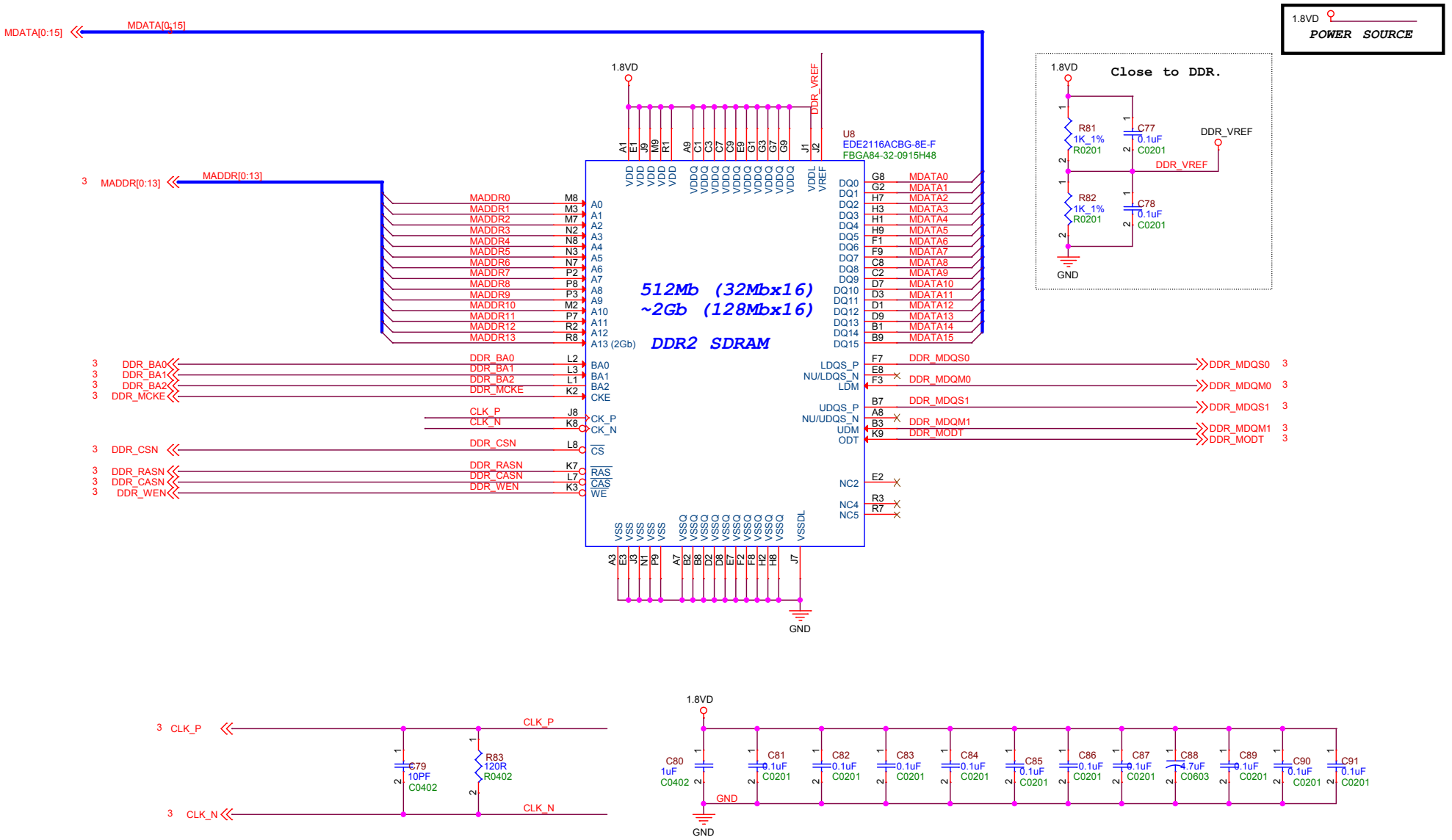

Focalcrest, Co. Ltd.			
Design Name: WIUSB			
Size: B	Page Name: DDR-CFG		Rev: v1.5
Date: Thursday, July 21, 2016	Sheet 8	of	12

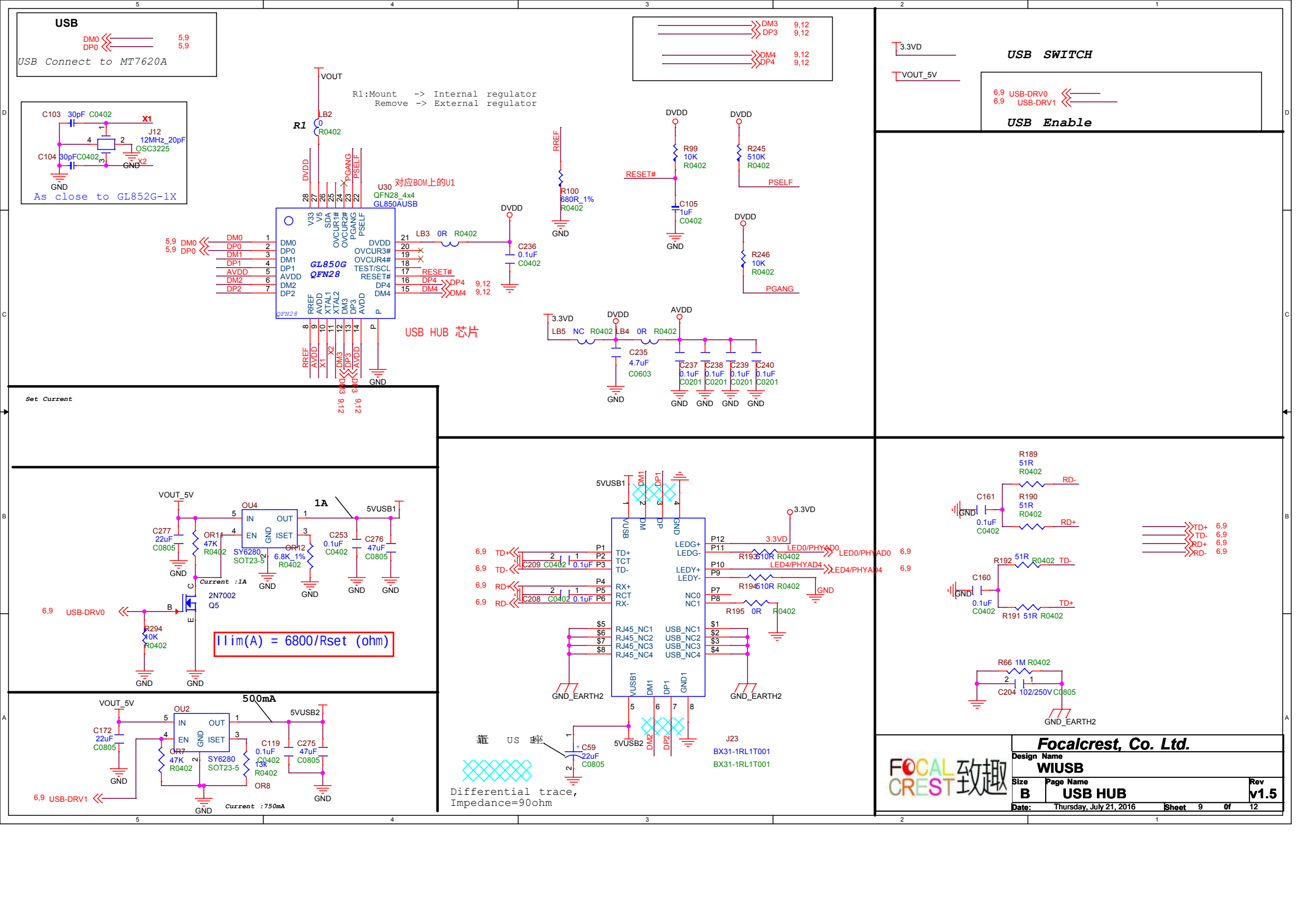
USB
DM0
DP0
5,9
5,9
USB Connect to MT7620A
DM3
DP3
9,12
9,12
DM4
DP4
9,12
9,12
3.3VD
VOUT_5V
USB SWITCH
6,9 USB-DRV0
6,9 USB-DRV1
USB Enable
C103 30pF C0402
X1
J12
12MHz_20pF
OSC3225
C104 30pF C0402
X2
GND
As close to GL852G-1X
VOUT
R1:Mount -> Internal regulator
Remove -> External regulator
R1
LB2
0
R0402
DVDD
PGANG
PSELF
U30
对应BOM上的U1
QFN28_4x4
GL850AUSB
GL850G
QFN28
V33
V5
SDA
OVCUR1#
OVCUR2#
PGANG
PSELF
DM0
DP0
DM1
DP1
AVDD
DM2
DP2
DVDD
OVCUR3#
OVCUR4#
TEST/SCL
RESET#
DP4
DM4
RREF
AVDD
XTAL1
XTAL2
DM3
DP3
AVDD
P
LB3 0R R0402
C236
0.1uF
C0402
RESET#
USB HUB 芯片
RREF
R100
680R_1%
R0402
R99
10K
R0402
C105
1uF
C0402
R245
510K
R0402
PSELF
R246
10K
R0402
PGANG
3.3VD
LB5 NC R0402
LB4 0R R0402
C235
4.7uF
C0603
C237 C238 C239 C240
0.1uF 0.1uF 0.1uF 0.1uF
C0201 C0201 C0201 C0201
Set Current
VOUT_5V
OU4
1A
IN
OUT
EN
GND
ISET
5VUSB1
C277
22uF
C0805
OR11
47K
R0402
SY6280
SOT23-5
OR12
6.8K_1%
R0402
C253
0.1uF
C0402
C276
47uF
C0805
Current :1A
2N7002
Q5
6,9 USB-DRV0
R294
10K
R0402
Ilim(A) = 6800/Rset (ohm)
500mA
OU2
5VUSB2
C172
22uF
C0805
OR7
47K
R0402
C119
0.1uF
C0402
13K
R0402
OR8
C275
47uF
C0805
6,9 USB-DRV1
Current :750mA
5VUSB1
VUSB
DM1
DP1
GND
TD+
TCT
TD-
RX+
RCT
RX-
LEDG+
LEDG-
LEDY+
LEDY-
NC0
NC1
LED0/PHYAD0
LED4/PHYAD4
R193 510R R0402
R194 510R R0402
R195 0R R0402
RJ45_NC1
RJ45_NC2
RJ45_NC3
RJ45_NC4
USB_NC1
USB_NC2
USB_NC3
USB_NC4
GND_EARTH2
C209 C0402 0.1uF
C208 C0402 0.1uF
C59
22uF
C0805
5VUSB2
J23
BX31-1RL1T001
BX31-1RL1T001
Differential trace,
Impedance=90ohm
R189
51R
R0402
RD-
C161
0.1uF
C0402
R190
51R
R0402
RD+
R192 51R R0402 TD-
C160
0.1uF
C0402
TD+
R191 51R R0402
R66 1M R0402
C204 102/250V C0805
GND_EARTH2
TD+ 6,9
TD- 6,9
RD+ 6,9
RD- 6,9
Focalcrest, Co. Ltd.
Design Name
WIUSB
Size
B
Page Name
USB HUB
Rev
V1.5
Date: Thursday, July 21, 2016
Sheet 9 0f 12

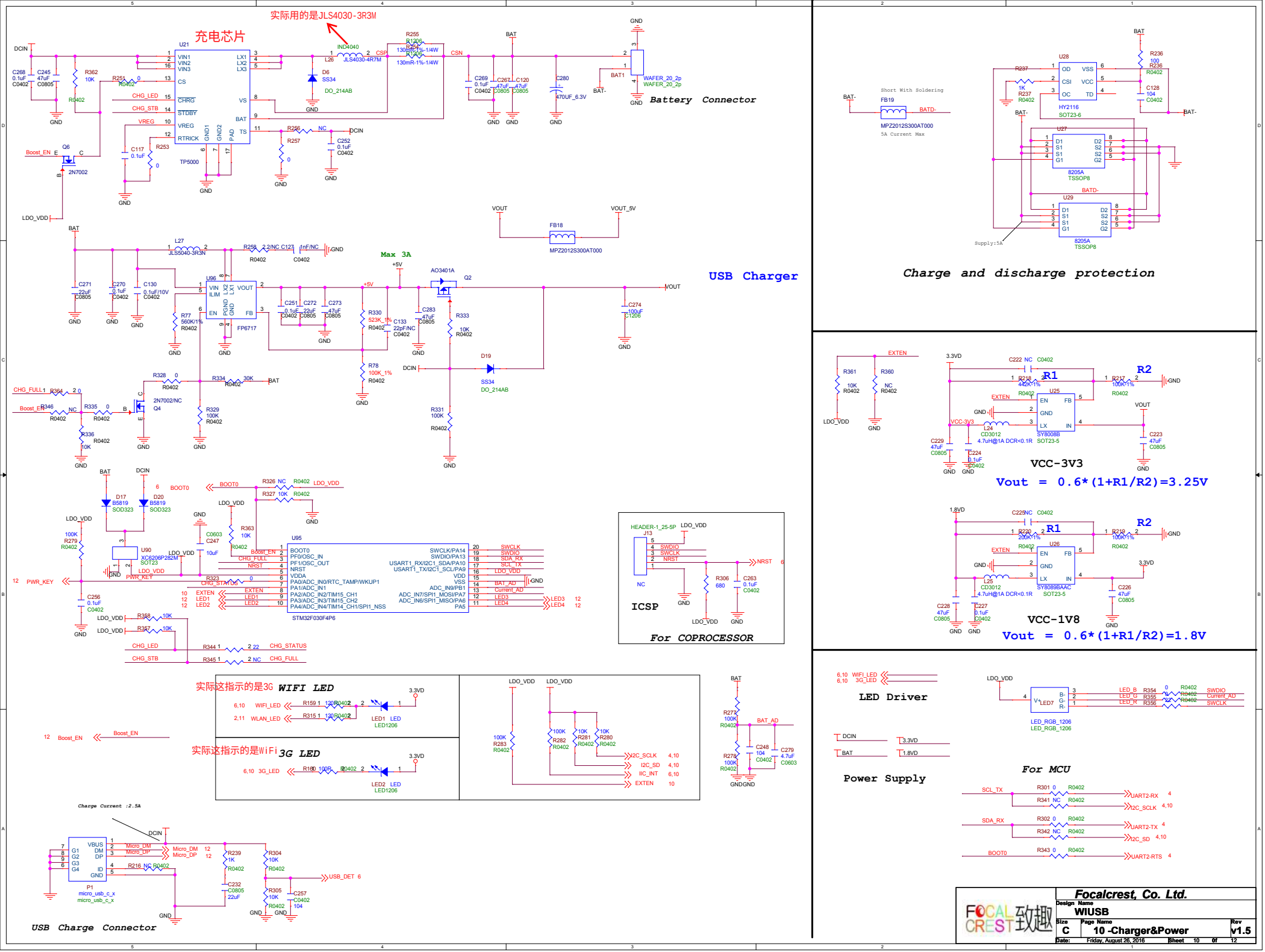

实际用的是JLS4030-3R3M
充电芯片
Battery Connector
USB Charger
Max 3A
Charge and discharge protection
VCC-3V3
Vout = 0.6*(1+R1/R2)=3.25V
VCC-1V8
Vout = 0.6*(1+R1/R2)=1.8V
ICSP
For COPROCESSOR
实际这指示的是3G WIFI LED
实际这指示的是WiFi 3G LED
LED Driver
Power Supply
For MCU
Charge Current :2.5A
USB Charge Connector
Focalcrest, Co. Ltd.
Design Name WIUSB
Size C
Page Name 10 -Charger&Power
Rev v1.5
Date: Friday, August 26, 2016
Sheet 10 of 12

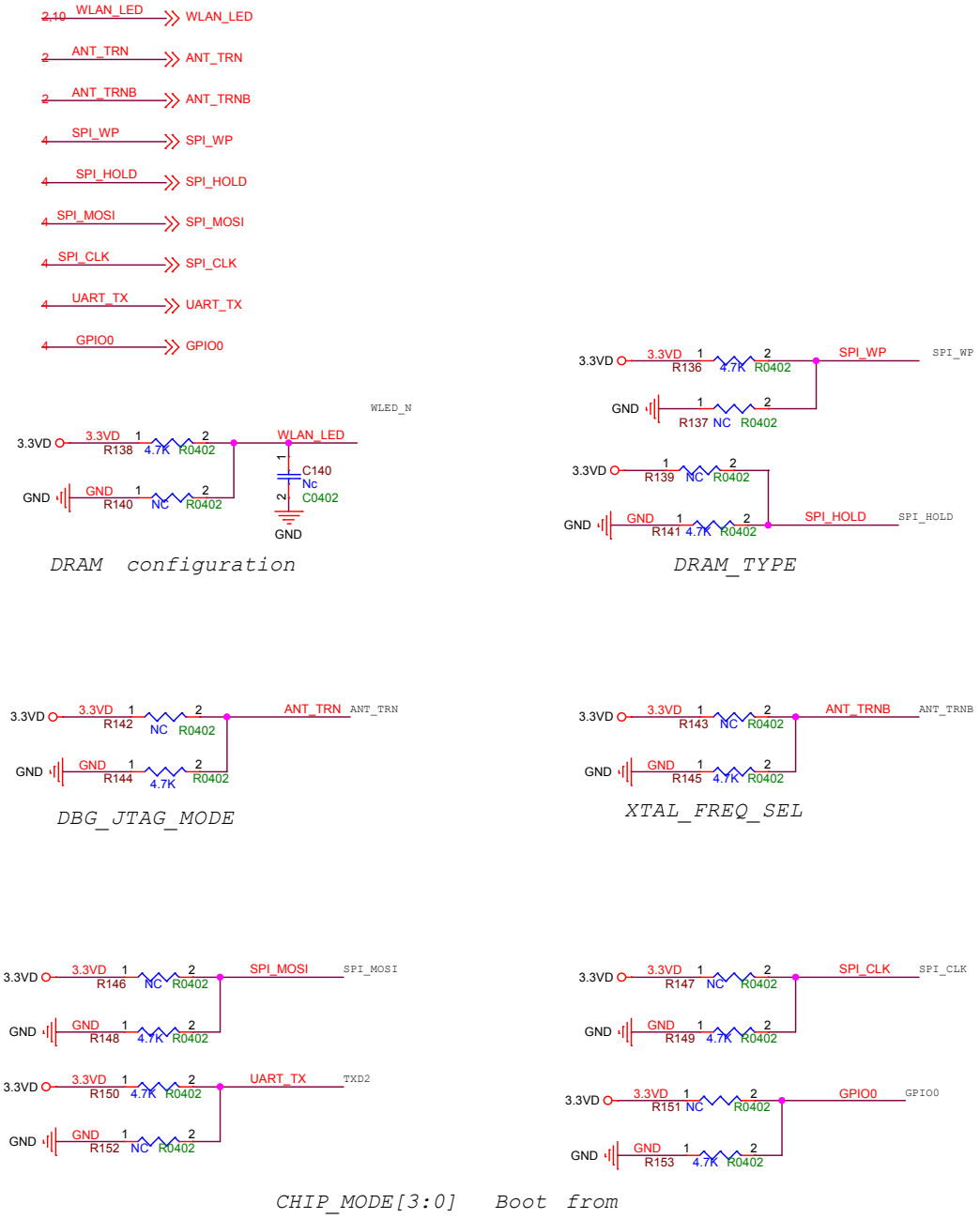

MT7620 Boot Up Strapping

Pin Name	Description	Value
WLED_N	DRAM_FROM_EE For non scan mode:	0: DRAM configuration from EEPROM 1: DRAM configuration from Auto Detect
ANT_TRN	DBG_JTAG_MODE	0: EPHY_LED 1: JTAG MODE
ANT_TRNB	XTAL_FREQ_SEL	0: 20MHz
{SPI_WP, SPI_HOLD}	DRAM_TYPE	01: DDR1 (CPU/3) TSOP 10: DDR2 (CPU/3) FBGA 11: SDRAM (CPU/5) (LVTTL 3.3 V) TSOP Package
{SPI_MOSI SPI_CLK, TXD2, GPIO0 }	CHIP_MODE[3:0]	A vector to set chip function/test/debug modes. In non-test/debug operation, 0001: Normal mode (boot from ROM+NAND flash 4 cycle address) 0010: Normal mode (boot from SPI 3Byte Addr) 0011: Normal mode (boot from SPI 4Byte Addr) 0100 :iNIC RGMII mode(boot from ROM) 0101: iNIC MII mode(boot from ROM) 0110: iNIC RVMII mode(boot from ROM) 0111: iNIC PHY mode(boot from ROM) 1000: iNIC USB mode(boot from ROM) 1001: iNIC PCIe mode(boot from ROM)

Focalcrest, Co. Ltd.

Design Name: WIUSB

Size: B | Page Name: CONFIG | Rev: v1.5

Date: Thursday, July 21, 2016 | Sheet 11 of 12

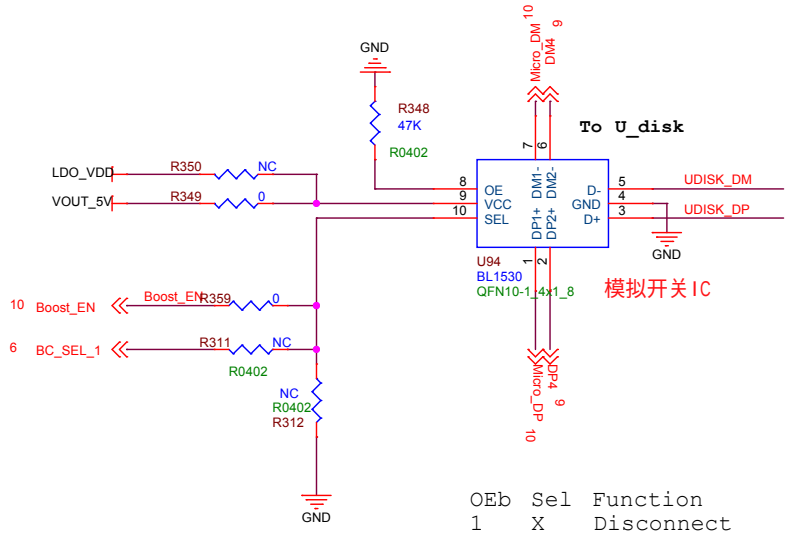

OEb	Sel	Function
1	X	Disconnect
0	0	Dp, Dn=Dp1, Dn1
0	1	Dp, Dn=Dp2, Dn2

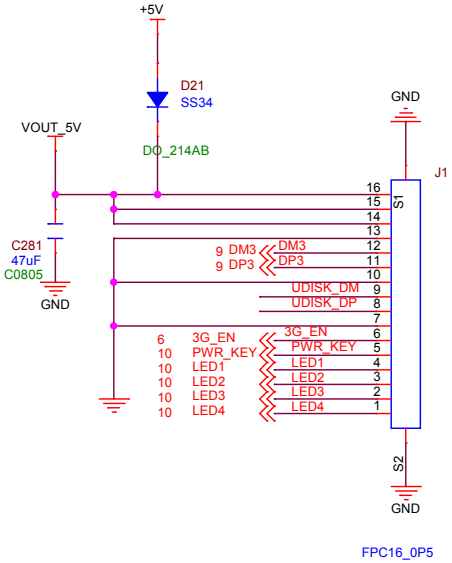

Focalcrest, Co. Ltd.			
Design Name: WIUSB			
Size: B	Page Name: Connector		Rev: v1.5
Date: Thursday, July 21, 2016	Sheet 12 of 12		