HAMAMATSU
PHOTON IS OUR BUSINESS

InGaAs PIN photodiode

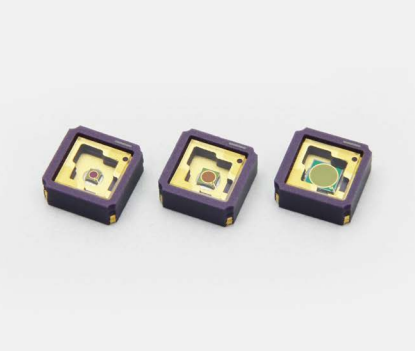

G17190/G17191/G17192/G17193 series

Near infrared detector in surface mount type ceramic package

These are near infrared detectors in a surface mount type ceramic package. We have a lineup with cutoff wavelengths ranging from 1.7 µm to 2.6 µm. They realize high sensitivity and low noise, and because they are compact, they are suitable for installation in hand-held devices and mobile devices.

Features

- **Cutoff wavelength**
  G17190 series: 1.7 µm
  G17191 series: 1.9 µm
  G17192 series: 2.1 µm
  G17193 series: 2.6 µm
- **Photosensitive area**
  G1719X-003K: ϕ0.3 mm
  G1719X-005K: ϕ0.5 mm
  G1719X-010K: ϕ1.0 mm
- **Compact, surface mount type ceramic package**
- **Compatible with lead-free solder reflow**
- **Low dark current**

Applications

- **Gas measurement**
- **Temperature measurement**
- **Laser measurement system**

Structure

Type no.	Photosensitive area (mm)	Package	Window material
G17190-003K	ϕ0.3	Ceramic	Borosilicate glass
G17190-005K	ϕ0.5		
G17190-010K	ϕ1.0		
G17191-003K	ϕ0.3		
G17191-005K	ϕ0.5		
G17191-010K	ϕ1.0		
G17192-003K	ϕ0.3		
G17192-005K	ϕ0.5		
G17192-010K	ϕ1.0		
G17193-003K	ϕ0.3		
G17193-005K	ϕ0.5		
G17193-010K	ϕ1.0		

Absolute maximum ratings (Ta=25 °C, unless otherwise noted)

Type no.	Reverse voltage V_R max. (V)	Operating temperature Topr (°C)	Storage temperature Tstg (°C)
G17190-003K	10	-25 to +85	-40 to +100
G17190-005K			
G17190-010K			
G17191-003K	1		
G17191-005K			
G17191-010K			
G17192-003K	1		
G17192-005K			
G17192-010K			
G17193-003K	1		
G17193-005K			
G17193-010K			

* When there is a temperature difference between a product and the surrounding area in high humidity environments, dew condensation may occur on the product surface. Dew condensation on the product may cause deterioration in characteristics and reliability.

Note: Exceeding the absolute maximum ratings even momentarily may cause a drop in product quality. Always be sure to use the product within the absolute maximum ratings.

Electrical and optical characteristics (Typ. Ta=25 °C, unless otherwise noted)

Type no.	Spectral response range λ (μm)	Peak sensitivity wavelength λp (μm)	Photosensitivity S λ=λp		Dark current I_D V_R=0.5 V		Dark current temperature coefficient ΔT_{ID} V_R=0.5 V (times/°C)
			Min. (A/W)	Typ. (A/W)	Typ. (nA)	Max. (nA)	
G17190-003K	0.9 to 1.7	1.55	0.9	1.0	0.1*1	0.5*1	1.09*1
G17190-005K					0.15*1	0.75*1	
G17190-010K					0.8*1	4*1	
G17191-003K	0.9 to 1.9	1.75	0.9	1.1	1	10	1.07
G17191-005K					3	30	
G17191-010K					10	100	
G17192-003K	0.9 to 2.1	1.95	1.0	1.2	10	100	1.07
G17192-005K					20	200	
G17192-010K					100	1000	
G17193-003K	0.9 to 2.6	2.3	1.0	1.3	400	4000	1.035
G17193-005K					1000	10000	
G17193-010K					3000	30000	

*1: V_R=5 V

Type no.	Cutoff frequency fc V_R=0 V R_L=50 Ω		Terminal capacitance Ct V_R=0 V f=1 MHz		Shunt resistance Rsh V_R=10 mV		Detectivity D* λ=λp		Noise equivalent power NEP λ=λp	
	Min. (MHz)	Typ. (MHz)	Typ. (pF)	Max. (pF)	Min. (MΩ)	Typ. (MΩ)	Min. (cm·Hz$^{1/2}$/W)	Typ. (cm·Hz$^{1/2}$/W)	Typ. (W/Hz$^{1/2}$)	Max. (W/Hz$^{1/2}$)
G17190-003K	450*1	600*1	5*1	7.5*1	200	1000	2.4×10^{12}	6.3×10^{12}	4.2×10^{-15}	1.2×10^{-14}
G17190-005K	160*1	200*1	15*1	20*1	80	400			7.0×10^{-15}	1.9×10^{-14}
G17190-010K	25*1	60*1	55*1	120*1	25	125			1.4×10^{-14}	3.8×10^{-14}
G17191-003K	40	90	25	50	10	50	3.0×10^{11}	1.0×10^{12}	2.0×10^{-14}	5.0×10^{-14}
G17191-005K	15	35	70	150	4	20			3.0×10^{-14}	8.5×10^{-14}
G17191-010K	5	10	230	500	1	5			6.0×10^{-14}	2.0×10^{-13}
G17192-003K	40	90	25	50	0.65	3	1.0×10^{11}	3.5×10^{11}	6.5×10^{-14}	2.0×10^{-13}
G17192-005K	15	35	70	150	0.2	1			1.5×10^{-13}	3.5×10^{-13}
G17192-010K	5	10	230	500	0.05	0.25			2.5×10^{-13}	6.5×10^{-13}
G17193-003K	20	50	50	100	0.02	0.1	3.0×10^{10}	9.0×10^{10}	4.0×10^{-13}	9.0×10^{-13}
G17193-005K	5	20	140	300	0.01	0.05			5.0×10^{-13}	1.5×10^{-12}
G17193-010K	2	6	500	1000	0.0028	0.014			1.0×10^{-12}	3.0×10^{-12}

*1: V_R=5 V

Spectral response

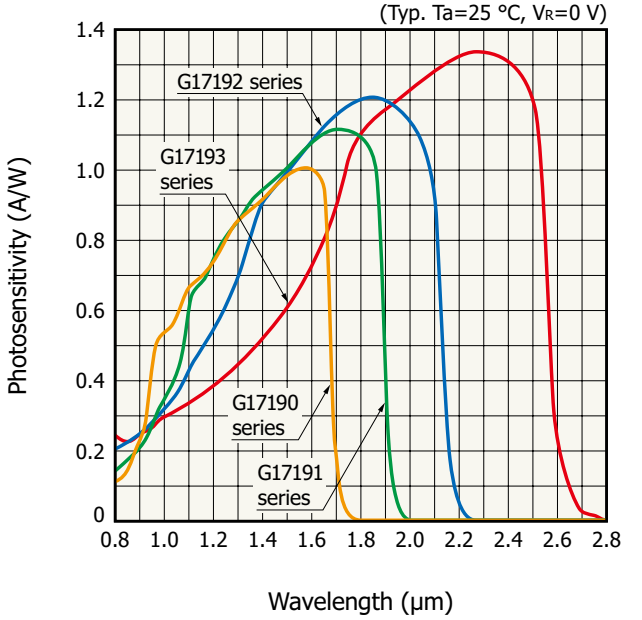

Sensitivity temperature characteristics

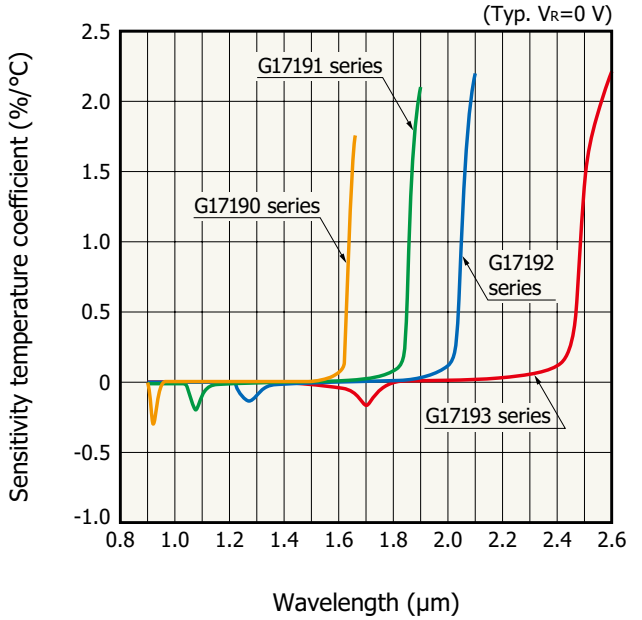

Linearity

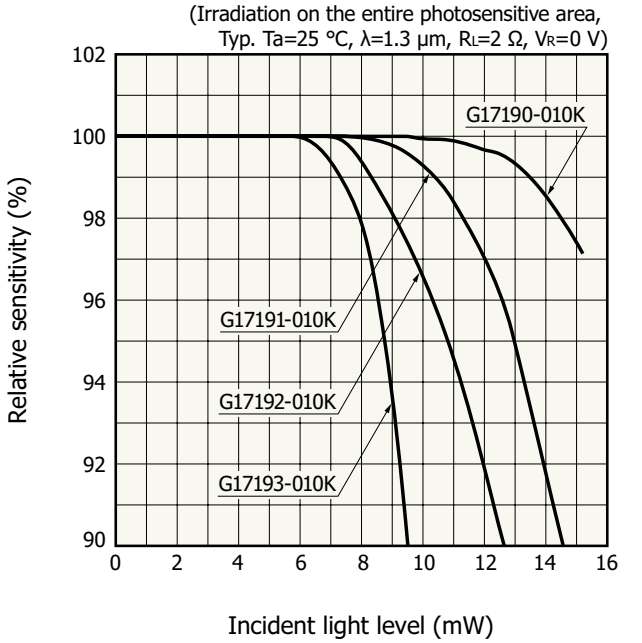

Dark current vs. reverse voltage

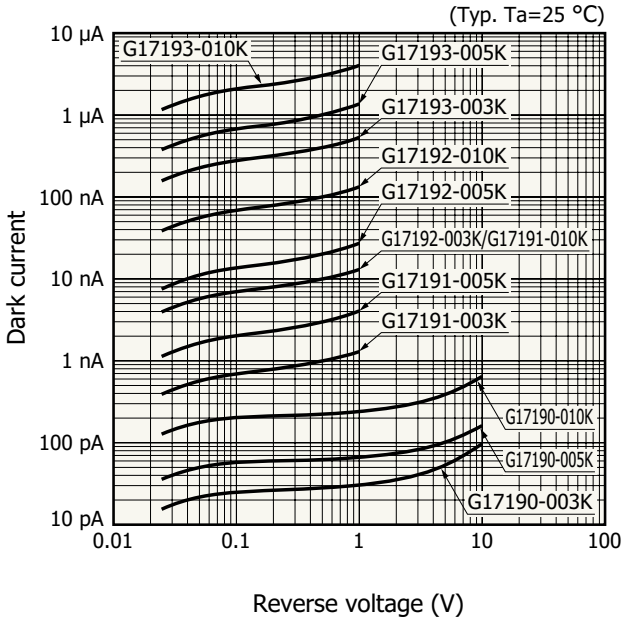

Terminal capacitance vs. reverse voltage

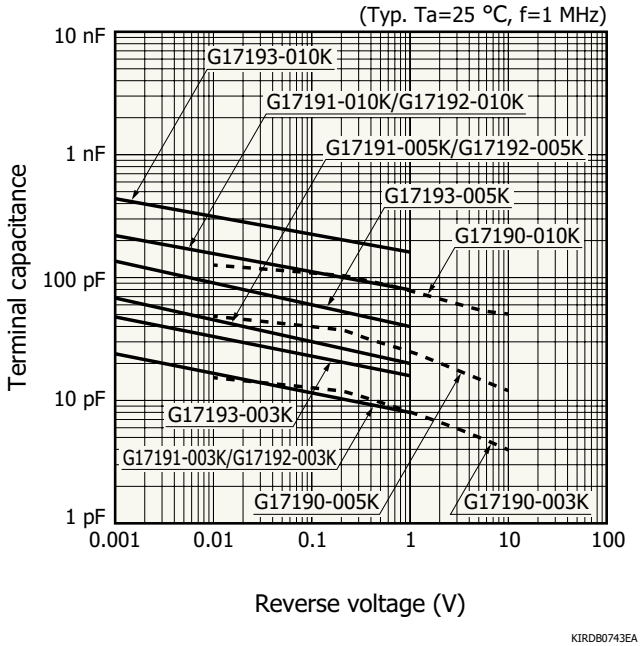

Dimensional outlines (unit: mm)

G17190/G17191/G17192/G17193-003K

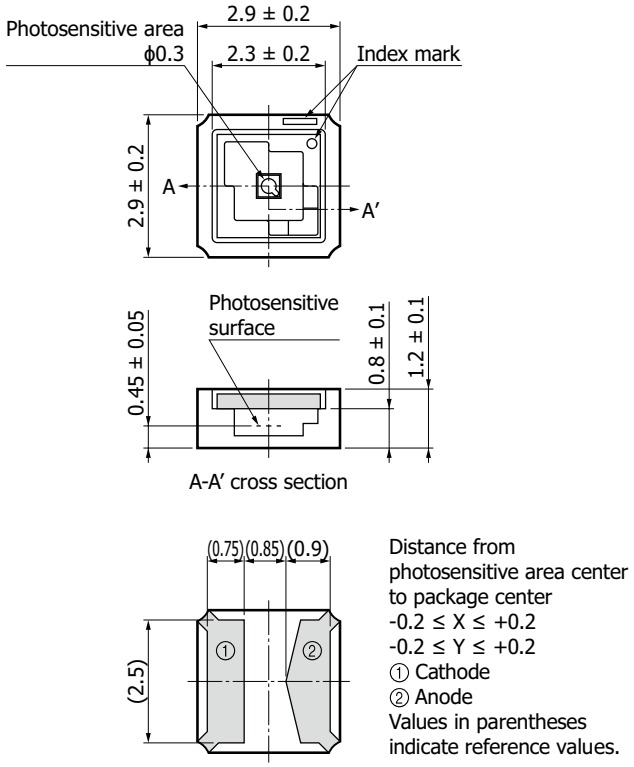

G17190/G17191/G17192/G17193-005K

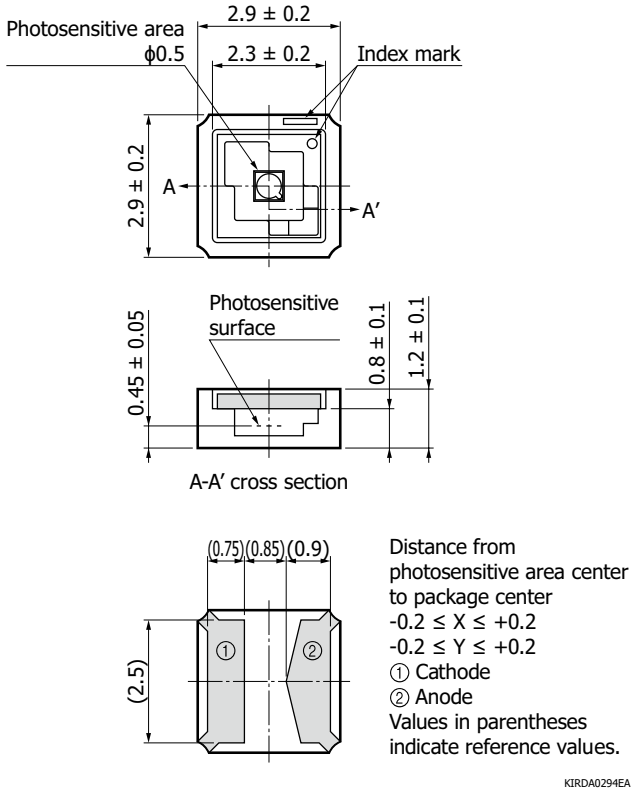

G17190/G17191/G17192/G17193-010K

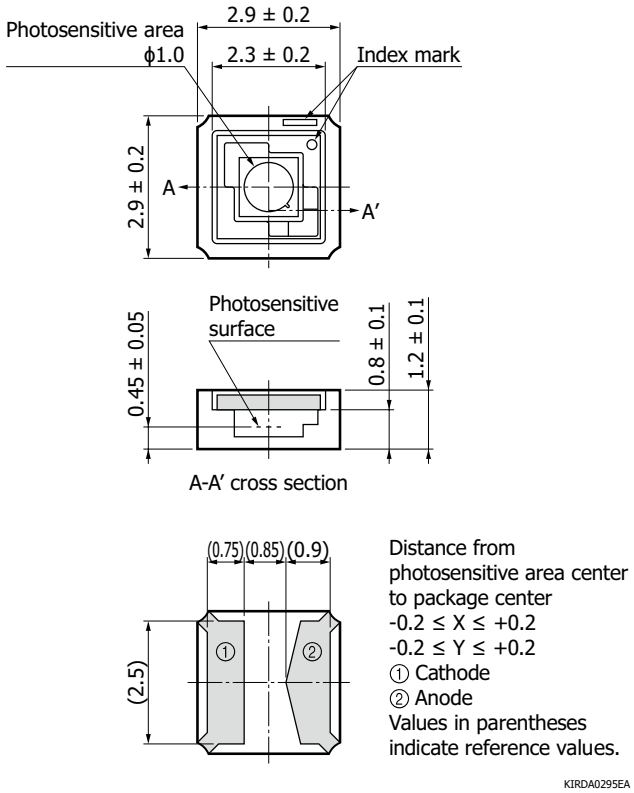

Recommended land pattern (unit: mm)

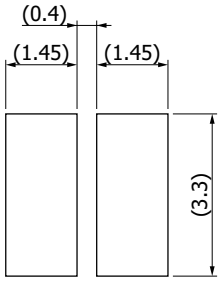

Values in parentheses indicate reference values.

KIRDC0148EA

Standard packing specifications

■ Reel (conforms to JEITA ET-7200)

Outer diameter	Hub diameter	Tape width	Material	Electrostatic characteristics
ϕ180 mm	ϕ60 mm	12 mm	PS	Conductive

■ Embossed tape (unit: mm, material: PS, conductive)

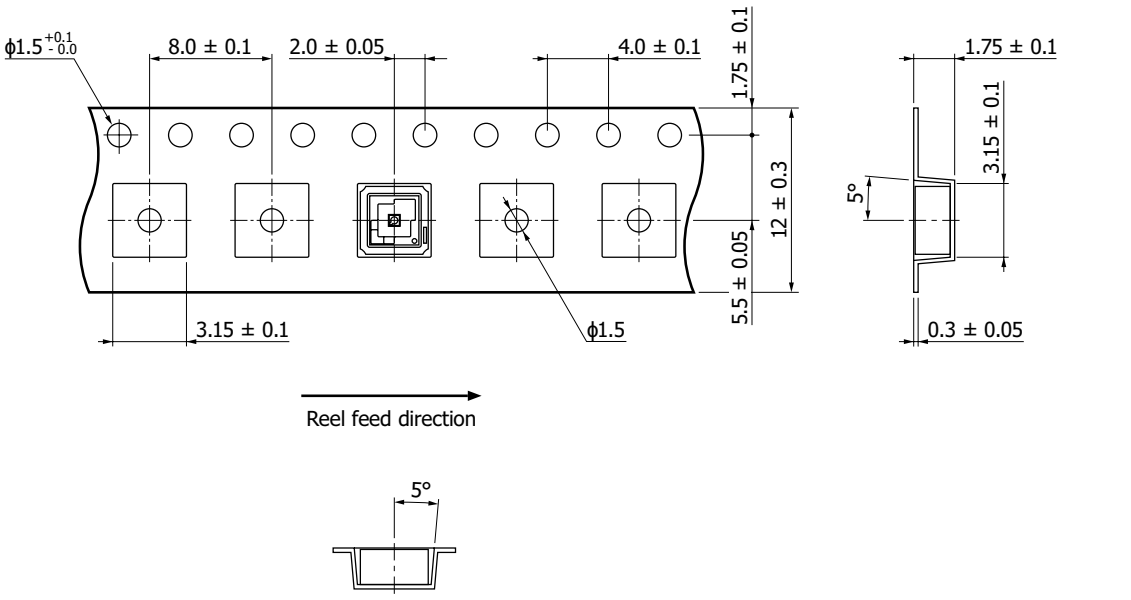

KIRDC0149EA

■ Packing quantity
500 pcs/reel

■ Packing state
Moisture-proof packaging containing desiccant

Recommended soldering conditions

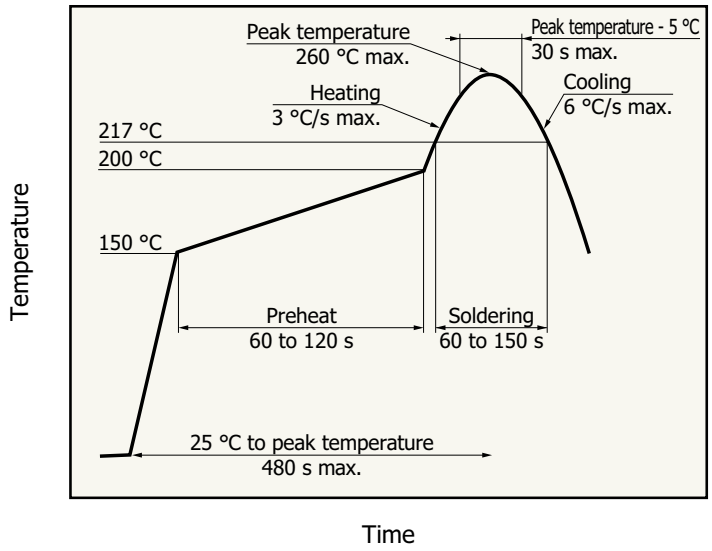

KSPDB0419EA

- After unpacking, store it in an environment at a temperature range of 5 to 30 °C, and a humidity of 60% or less, and perform reflow soldering within 1year.
- The effect that the product receives during reflow soldering varies depending on the circuit board and reflow oven that are used. When you set reflow soldering conditions, check that problems do not occur in the product by testing out the conditions in advance.

Related information

www.hamamatsu.com/sp/ssd/doc_en.html

■ Precautions
· Disclaimer
· Safety consideration / Opto-semiconductor products
· Precautions / Surface mount type products
· Precautions / Compound opto-semiconductors (photosensors, light emitters)

■ Catalogs
· Selection guide / Infrared detectors
· Technical note / Compound semiconductor photosensors

Information described in this material is current as of January 2026.
Product specifications are subject to change without prior notice due to improvements or other reasons. This document has been carefully prepared and the information contained is believed to be accurate. In rare cases, however, there may be inaccuracies such as text errors. Before using these products, always contact us for the delivery specification sheet to check the latest specifications.
The product warranty is valid for one year after delivery and is limited to product repair or replacement for defects discovered and reported to us within that one year period. However, even if within the warranty period we accept absolutely no liability for any loss caused by natural disasters or improper product use.
Copying or reprinting the contents described in this material in whole or in part is prohibited without our prior permission.

HAMAMATSU PHOTONICS K.K.

Visit our website for product and contact information.
www.hamamatsu.com

Cat. No. KIRD1153E02
Jan. 2026 DN
Created in Japan