FOR REFERENCE ONLY

PROPRIETARY INFORMATION FOR NMB/MinebeaMitsumi
UNAUTHORIZED REPRODUCTION PROHIBITED

■#0081 TURNING■
- PER PD-DV-MG-740000.
- ตาม PD-DV-MG-740000

■#8011 COMPONENT INSPECT■
- INSPECT PER PD-DV-QC-400000.
- ตรวจสอบตาม PD-DV-QC-400000

#0081 TURNING Ra 3.2 (Ra 1.6)
#8011 COMPONENT INSPECT

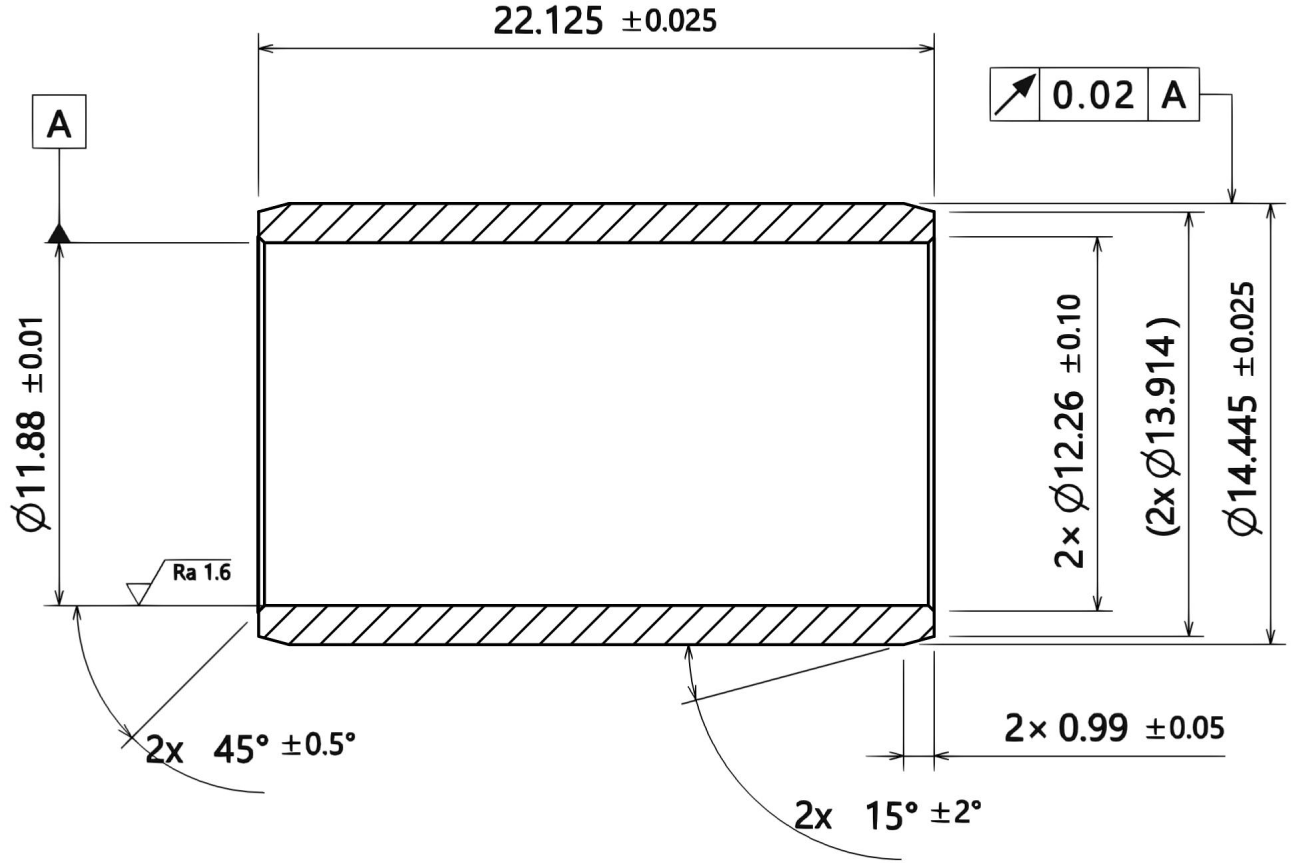

@LEFT SECTION

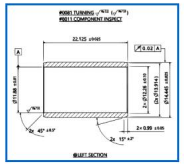

0081 1/1

REV. RECORD ---	NMB Flight Propulsion and Aerostructure Products B/U		
DRAWN Thapanon P. 2026/05/14	PART NAME STRAIGHT SLEEVE		PRODUCT CLASS CODE A
CHECKED Nanthiwa K. 2026/05/14	PART NO. 61TAHJ07A028-T		AUTHORITY DATA N/A
APPROVED Teerapol K. 2026/05/14	DRAWING NO. C61-04033_DRS01	REV. ---	SEQ. (PAGE) PA010(1/6)

AUTHORING TOOLS: CATIA V5 R33 SP5 HF2 (3DA)
SMART EXCHANGE 2024.1.0.1 (PRC), HTML TEMPLATE v1.0

FOR REFERENCE ONLY

PROPRIETARY INFORMATION FOR NMB/MinebeaMitsumi
UNAUTHORIZED REPRODUCTION PROHIBITED

■#2501 SANDBLAST■
・PER RE45009.
APPLY TO ALL SURFACES PERFORM FOR THE PARTS PRIOR TO BONDING LINERS.

・ตาม PD-DV-MG-880000.
ทำ SANDBLAST ทั่วผิว ดำเนินการกับชิ้นงานก่อนติด LINERS

■#2511 TEFLON BONDING■
・PER RE45002.
SEE BILL OF MATERIALS FOR
LINER No. AND LINER MATERIAL.
ADHESIVE : ADHESIVE C

・ตาม RE45002
LINER No. และ LINER MATERIAL ระบุไว้ที่
BILL OF MATERIALS
ADHESIVE : ADHESIVE C

#2511 TEFLON BONDING

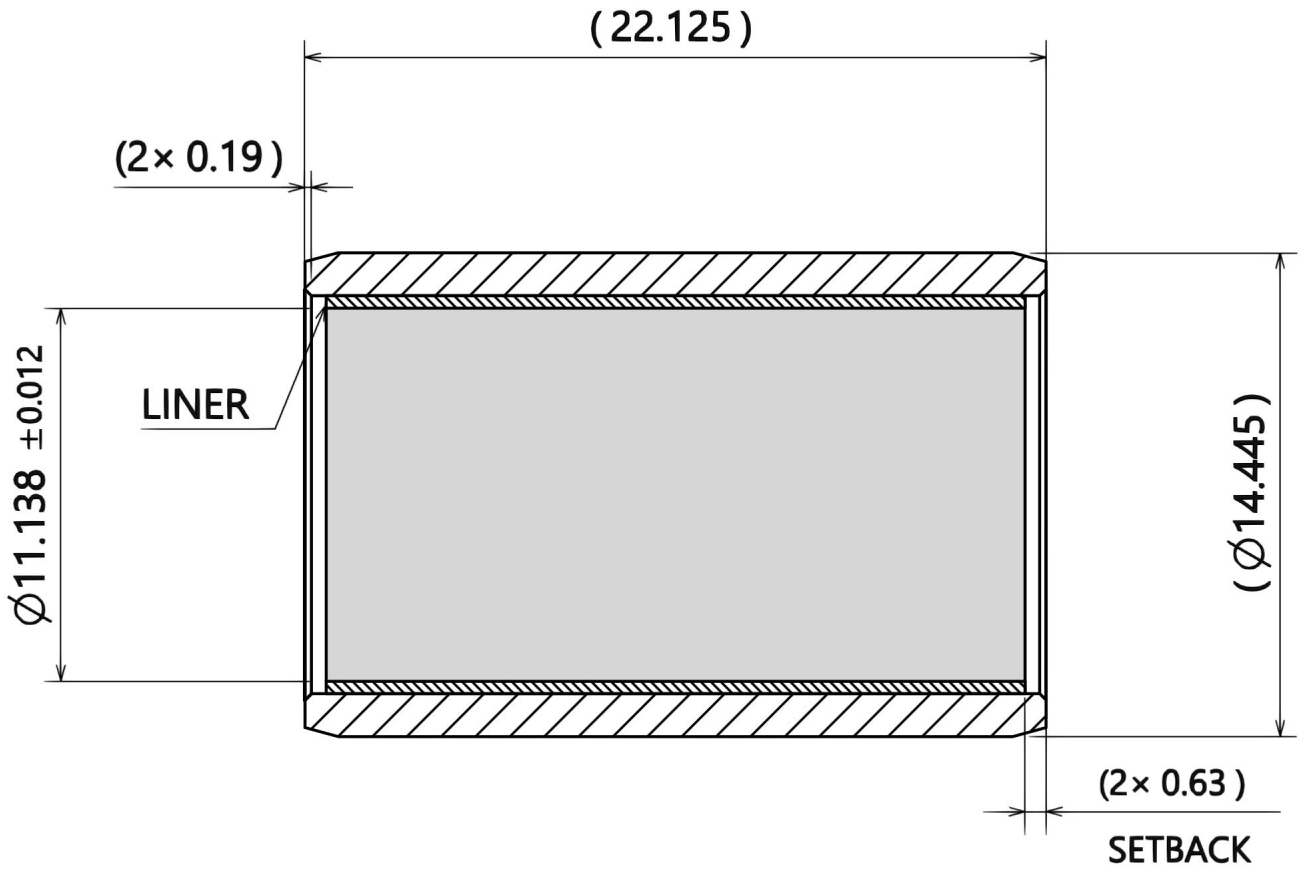

@LEFT SECTION

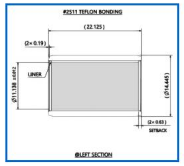

2511 1/1

REV. RECORD ---	NMB Flight Propulsion and Aerostructure Products B/U		
DRAWN Thapanon P. 2026/05/14	PART NAME STRAIGHT SLEEVE		PRODUCT CLASS CODE A
CHECKED Nanthiwa K. 2026/05/14	PART NO. 61TAHJ07A028-T		AUTHORITY DATA N/A
APPROVED Teerapol K. 2026/05/14	DRAWING NO. C61-04033_DRS01	REV. ---	SEQ. (PAGE) PA020(2/6)

AUTHORING TOOLS: CATIA V5 R33 SP5 HF2 (3DA)
SMART EXCHANGE 2024.1.0.1 (PRC), HTML TEMPLATE v1.0

FOR REFERENCE ONLY

PROPRIETARY INFORMATION FOR NMB/MinebeaMitsumi
UNAUTHORIZED REPRODUCTION PROHIBITED

■#2561 TRIM■

- REMOVE EXCESSIVE ADHESIVE AND LINER PER RE45002.
  LINERS MAY BE RECESSED UP TO THE MAX ALLOWED SETBACK DISTANCES OR ADHERED TO THE METAL CHAMFERS.
  LINERS OR LOOSE LINER MATERIAL SHALL NOT EXTEND INTO THE METAL CHAMFER AREA UNLESS THAT MATERIAL IS ADHERED TO THE METAL CHAMFER.

- ลอกกาวและ LINER ส่วนเกินออกตาม RE45002
  LINERSสามารถถอยเข้าไปในชิ้นงานได้แต่ต้องไม่เกินค่าสูงสุดของระยะ SETBACK หรือสามารถติดแนบอยู่บนCHAMFERSของชิ้นงาน.
  LINERSหรือเศษLINERSที่หลุดลุ่ยต้องไม่ยื่นเข้าไปในบริเวณพื้นที่CHAMFERS ของชิ้นงาน เว้นแต่ว่าวัสดุนั้นได้ติดแนบไว้บนCHAMFERSของชิ้นงาน.

#2561 TRIM

Ra 3.2

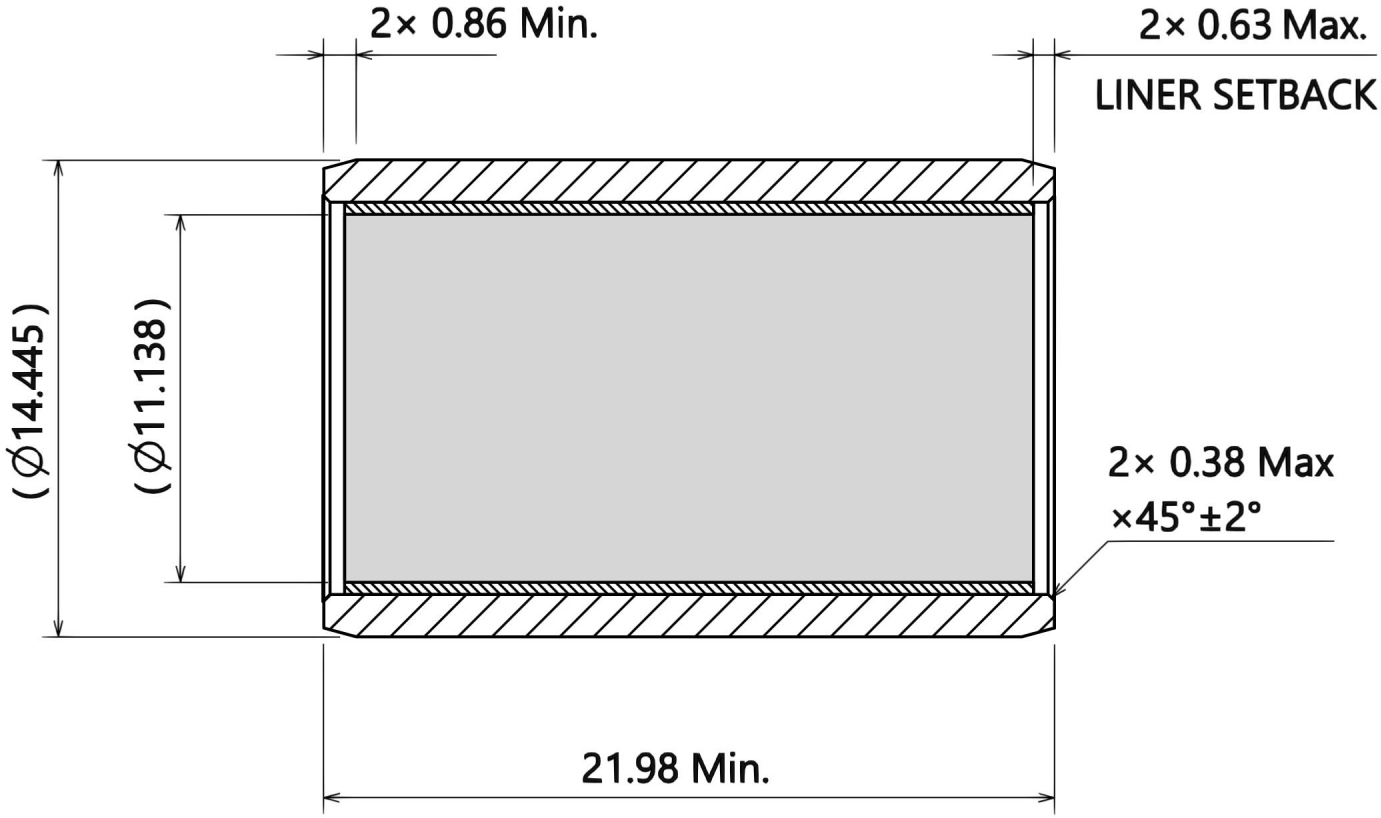

@LEFT SECTION

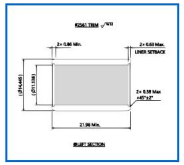

2561 1/1

REV. RECORD ---	NMB Flight Propulsion and Aerostructure Products B/U		
DRAWN Thapanon P. 2026/05/14	PART NAME STRAIGHT SLEEVE		PRODUCT CLASS CODE A
CHECKED Nanthiwa K. 2026/05/14	PART NO. 61TAHJ07A028-T		AUTHORITY DATA N/A
APPROVED Teerapol K. 2026/05/14	DRAWING NO. C61-04033_DRS01	REV. ---	SEQ. (PAGE) PA030(3/6)

AUTHORING TOOLS: CATIA V5 R33 SP5 HF2 (3DA)
SMART EXCHANGE 2024.1.0.1 (PRC), HTML TEMPLATE v1.0

FOR REFERENCE ONLY

FOR REFERENCE ONLY

PROPRIETARY INFORMATION FOR NMB/MinebeaMitsumi
UNAUTHORIZED REPRODUCTION PROHIBITED

■#1011 OD GRIND■

#1011 OD GRIND

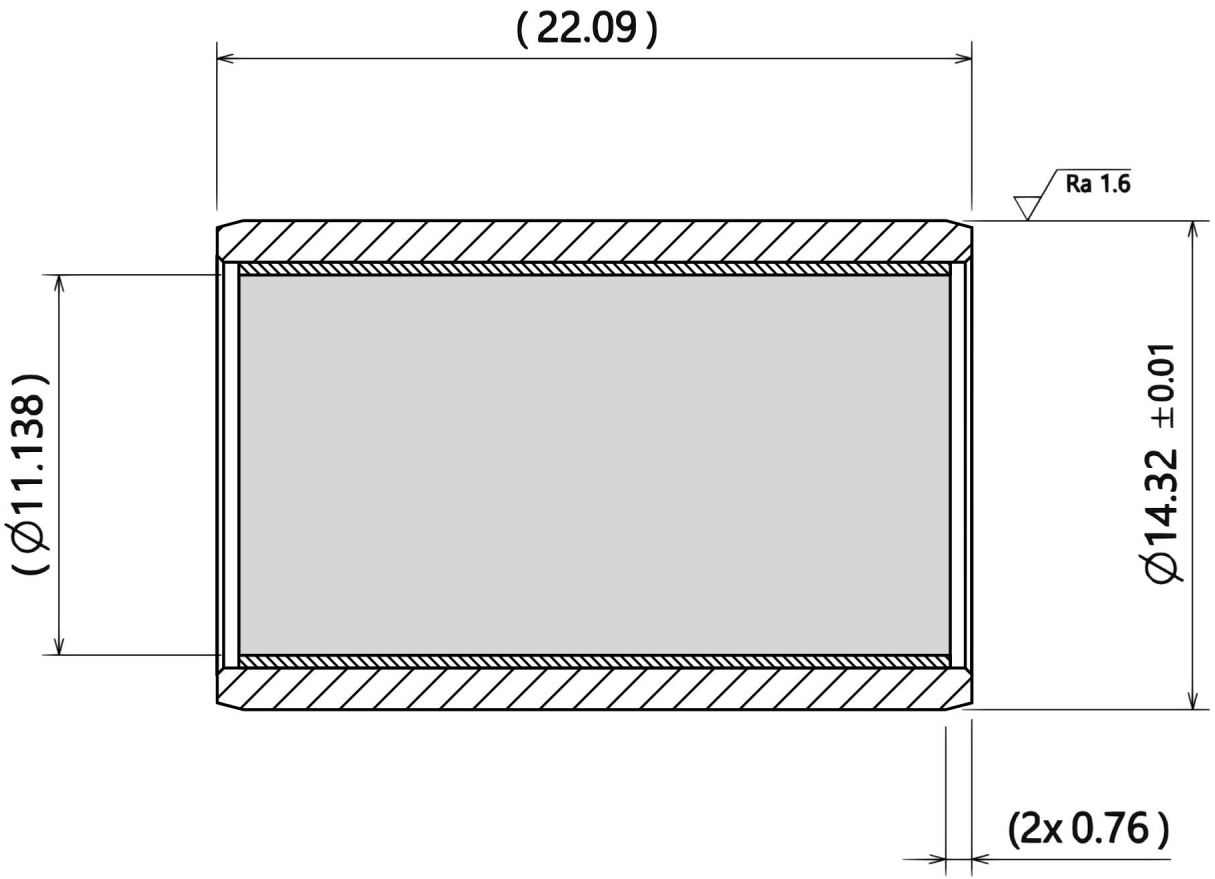

@LEFT SECTION

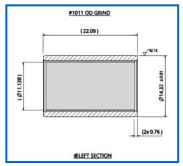

1011 1/1

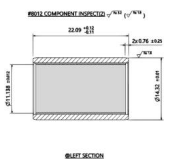

8012 1/1

REV. RECORD ---	NMB Flight Propulsion and Aerostructure Products B/U		
DRAWN Thapanon P. 2026/05/14	PART NAME STRAIGHT SLEEVE		PRODUCT CLASS CODE A
CHECKED Nanthiwa K. 2026/05/14	PART NO. 61TAHJ07A028-T		AUTHORITY DATA N/A
APPROVED Teerapol K. 2026/05/14	DRAWING NO. C61-04033_DRS01	REV. ---	SEQ. (PAGE) PA040(4/6)

AUTHORING TOOLS: CATIA V5 R33 SP5 HF2 (3DA)
SMART EXCHANGE 2024.1.0.1 (PRC), HTML TEMPLATE v1.0

FOR REFERENCE ONLY

FOR REFERENCE ONLY

PROPRIETARY INFORMATION FOR NMB/MinebeaMitsumi
UNAUTHORIZED REPRODUCTION PROHIBITED

■#8012 COMPONENT INSPECT (2)■

- INSPECT PER PD-DV-QC-400000.
- ตรวจสอบตาม PD-DV-QC-400000

#8012 COMPONENT INSPECT(2) Ra 3.2 (Ra 1.6)

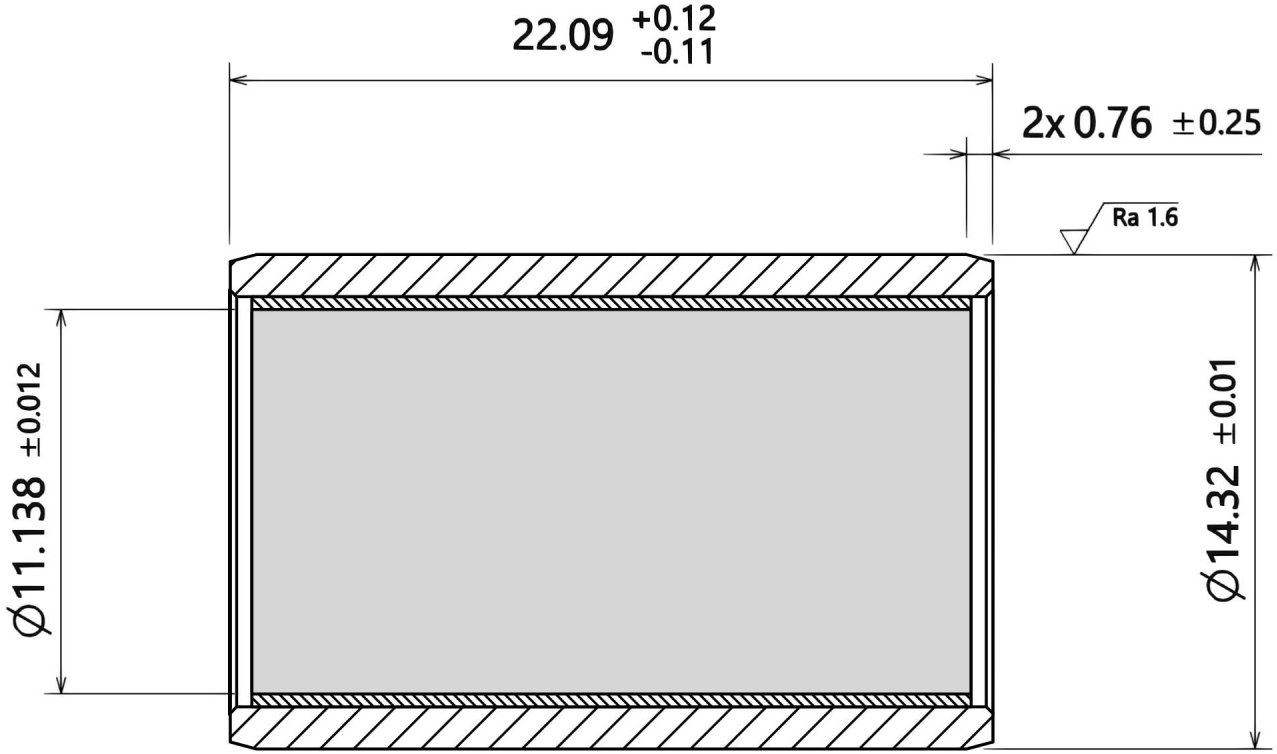

@LEFT SECTION

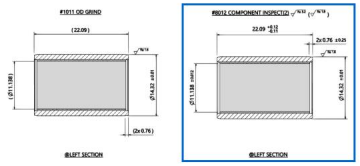

1011 1/1 8012 1/1

REV. RECORD ---	NMB Flight Propulsion and Aerostructure Products B/U		
DRAWN Thapanon P. 2026/05/14	PART NAME STRAIGHT SLEEVE		PRODUCT CLASS CODE A
CHECKED Nanthiwa K. 2026/05/14	PART NO. 61TAHJ07A028-T		AUTHORITY DATA N/A
APPROVED Teerapol K. 2026/05/14	DRAWING NO. C61-04033_DRS01	REV. ---	SEQ. (PAGE) PA040(4/6)

AUTHORING TOOLS: CATIA V5 R33 SP5 HF2 (3DA)
SMART EXCHANGE 2024.1.0.1 (PRC), HTML TEMPLATE v1.0

FOR REFERENCE ONLY

FOR REFERENCE ONLY

PROPRIETARY INFORMATION FOR NMB/MinebeaMitsumi
UNAUTHORIZED REPRODUCTION PROHIBITED

■#3551 ALODINE■

****

MinebeaMitsumi PROPRIETARY
UNAUTHORIZED REPRODUCTION PROHIBITED.
PLEASE RETURN THIS DRAWING TOGETHER WITH
THE PARTS AFTER USE.

****

CHEMICAL COATING REQUIREMENT
COATING : CHEMICAL CONVERSION COATING.
APPLICABLE SPEC : MIL-DTL-5541, TYPE 1, CLASS 1A
PLATING AREA : ALL SURFACE EXCEPT LINER.
(MASKING IS NOT REQUIRED.)
INSPECTION RECORD : REQUIRED
NOTES : DIMENSIONS APPLY AFTER SURFACE TREATMENT.

#3551 ALODINE

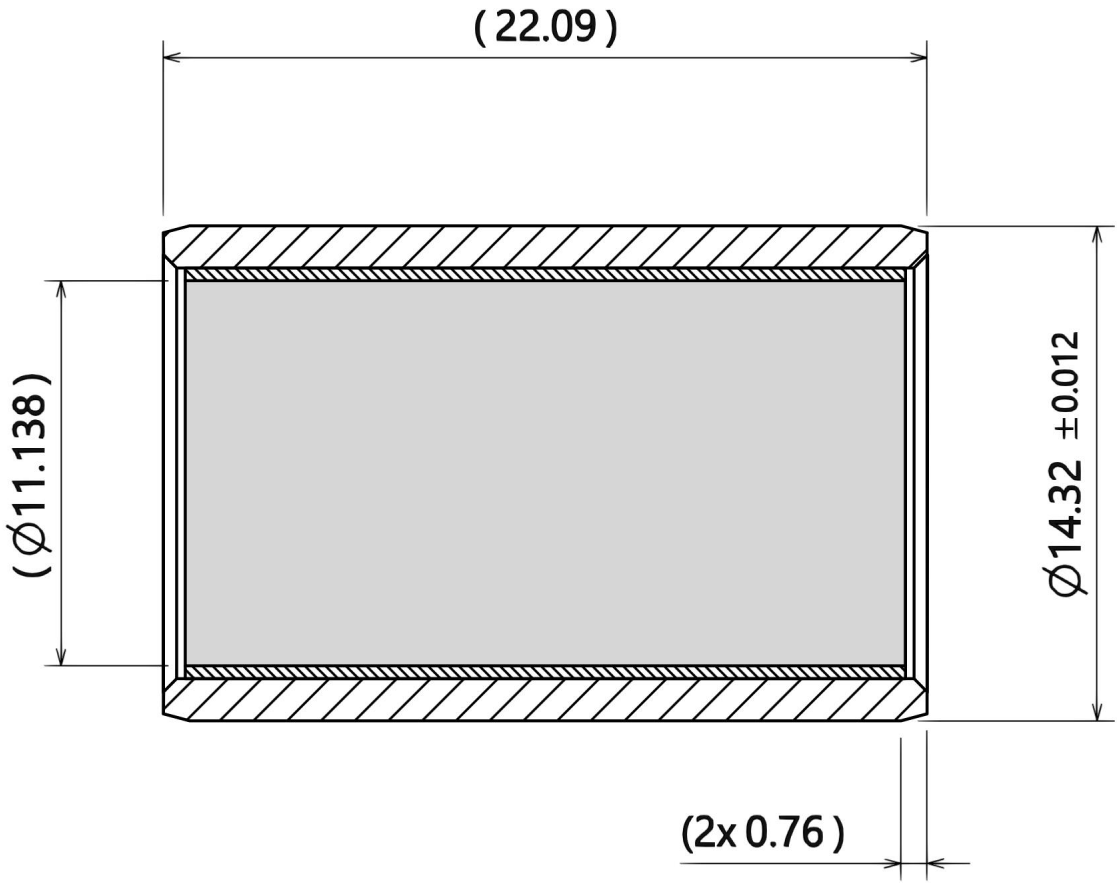

@LEFT SECTION

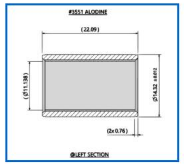

3551 1/1

REV. RECORD ---	NMB Flight Propulsion and Aerostructure Products B/U		
DRAWN Thapanon P. 2026/05/14	PART NAME STRAIGHT SLEEVE		PRODUCT CLASS CODE A
CHECKED Nanthiwa K. 2026/05/14	PART NO. 61TAHJ07A028-T		AUTHORITY DATA N/A
APPROVED Teerapol K. 2026/05/14	DRAWING NO. C61-04033_DRS01	REV. ---	SEQ. (PAGE) PA050(5/6)

AUTHORING TOOLS: CATIA V5 R33 SP5 HF2 (3DA)
SMART EXCHANGE 2024.1.0.1 (PRC), HTML TEMPLATE v1.0

FOR REFERENCE ONLY

FOR REFERENCE ONLY

PROPRIETARY INFORMATION FOR NMB/MinebeaMitsumi
UNAUTHORIZED REPRODUCTION PROHIBITED

■#8013 COMPONENT INSPECT (3)■

・ INSPECT PER PD-DV-QC-000009.
AND DRAWING NO : C61-04033_DRS01
SEQ : PA050
CONFIRM THAT THE SURFACE COLOR IS YELLOW
(INCLUDING COLOR VARIATIONS SUCH AS IRIDESCENCE).

・ ตรวจสอบตาม PD-DV-QC-000009
และ DRAWING NO : C61-04033_DRS01
หน้า : PA050
ให้ยืนยันว่าสีของพื้นผิวเป็นสีเหลือง
(รวมถึงการเปลี่ยนแปลงสี เช่น สีเหลือบมุก)

■#8601 STOCK■

#8013 COMPONENT INSPECT(3)

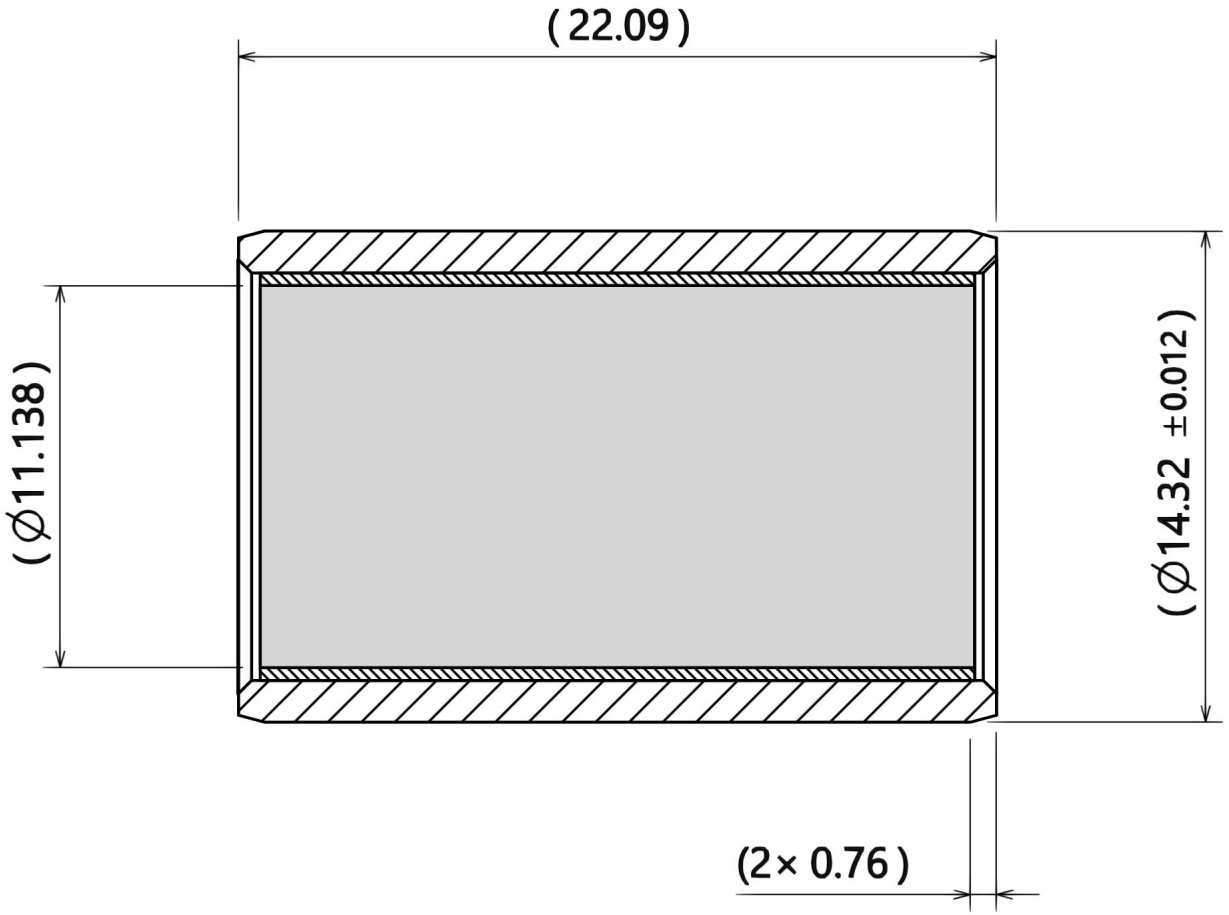

@LEFT SECTION

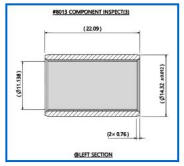

8013 1/1

REV. RECORD ---	NMB Flight Propulsion and Aerostructure Products B/U		
DRAWN Thapanon P. 2026/05/14	PART NAME STRAIGHT SLEEVE		PRODUCT CLASS CODE A
CHECKED Nanthiwa K. 2026/05/14	PART NO. 61TAHJ07A028-T		AUTHORITY DATA N/A
APPROVED Teerapol K. 2026/05/14	DRAWING NO. C61-04033_DRS01	REV. ---	SEQ. (PAGE) STOCK(6/6)

AUTHORING TOOLS: CATIA V5 R33 SP5 HF2 (3DA)
SMART EXCHANGE 2024.1.0.1 (PRC), HTML TEMPLATE v1.0

FOR REFERENCE ONLY