PROPRIETARY INFORMATION FOR NMB/MinebeaMitsumi
UNAUTHORIZED REPRODUCTION PROHIBITED

■#0081 TURNING■
- PER PD-DV-MG-740000.

■#8011 COMPONENT INSPECT■
- PER RQ91290.
- ตาม PD-DV-QC-400000.

■#7001 HEAT TREAT■

■#2501 SANDBLAST■
- PER RE45009.
  APPLY TO ALL SURFACES FOR THE PARTS PRIOR TO BONDING LINERS.
- ตาม PD-DV-MG-880000.
  ทำ SANDBLAST ทั่วผิว ดำเนินการกับชิ้นงานต่างๆ ก่อนติด LINERS.

## #0081 TURNING
## #8011 COMPONENT INSPECT

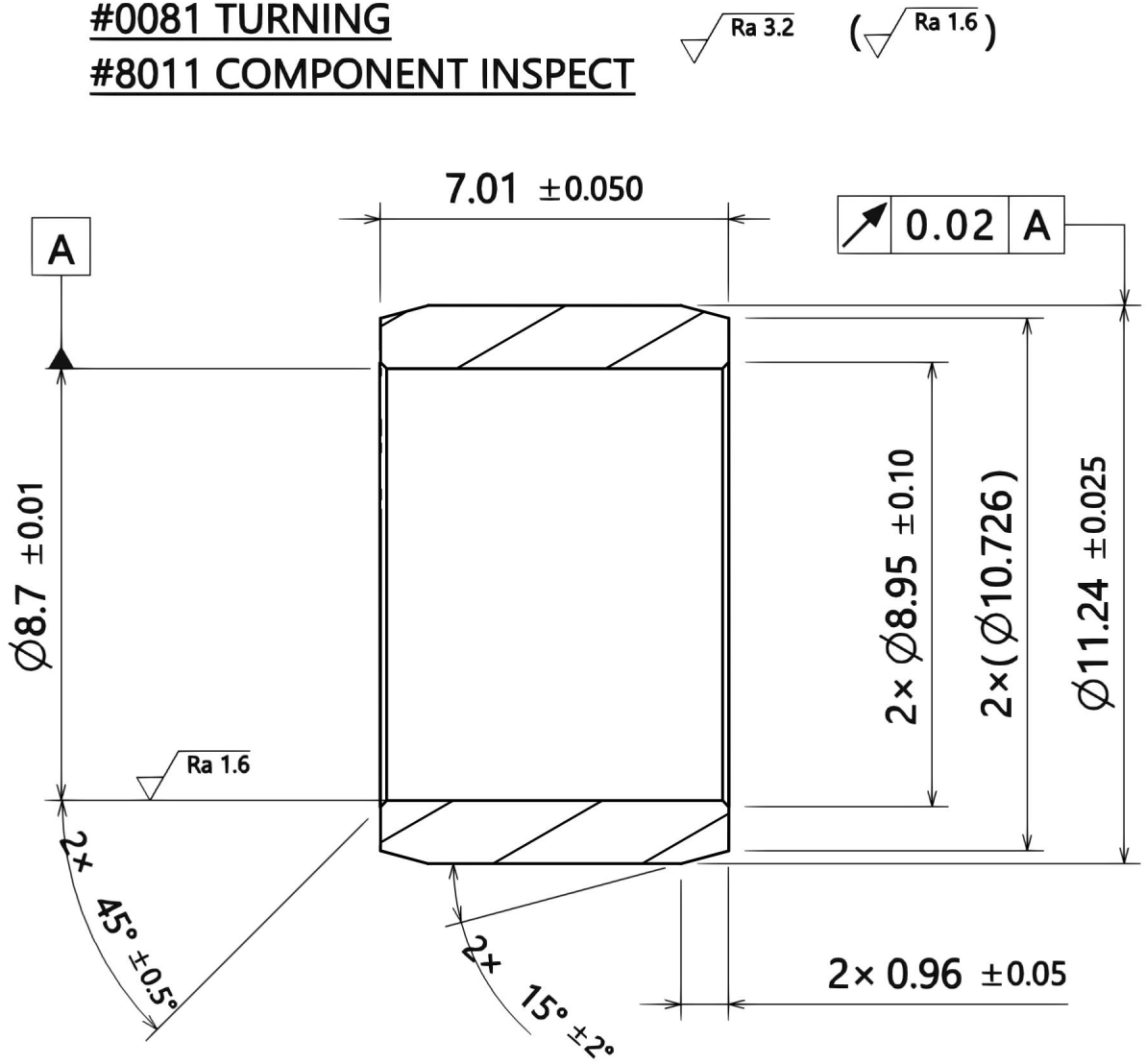


## @LEFT SECTION

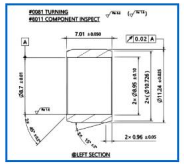

0081 1/1

| | | | |
|---|---|---|---|
| REV. RECORD --- | NMB Flight Propulsion and Aerostructure Products B/U | | |
| DRAWN NANTHIWA K. 2026/06/04 | PART NAME STRAIGHT SLEEVE | | PRODUCT CLASS CODE A |
| CHECKED THAPANON P. 2026/06/04 | PART NO. 61TAHJ05C009-T | | AUTHORITY DATA N/A |
| APPROVED TEERAPOL K. 2026/06/04 | DRAWING NO. C63-04165_DRS01 | REV. --- | SEQ. (PAGE) PA010(1/4) |

AUTHORING TOOLS: CATIA V5 R33 SP5 HF2 (3DA)
SMART EXCHANGE 2024.1.0.1 (PRC), HTML TEMPLATE v1.0

PROPRIETARY INFORMATION FOR NMB/MinebeaMitsumi
UNAUTHORIZED REPRODUCTION PROHIBITED

■#2511 TEFLON BONDING■

- PER RE45002.
  ADHESIVE : ADHESIVE C

  สารยึดติด : ADHESIVE C

# #2511 TEFLON BONDING

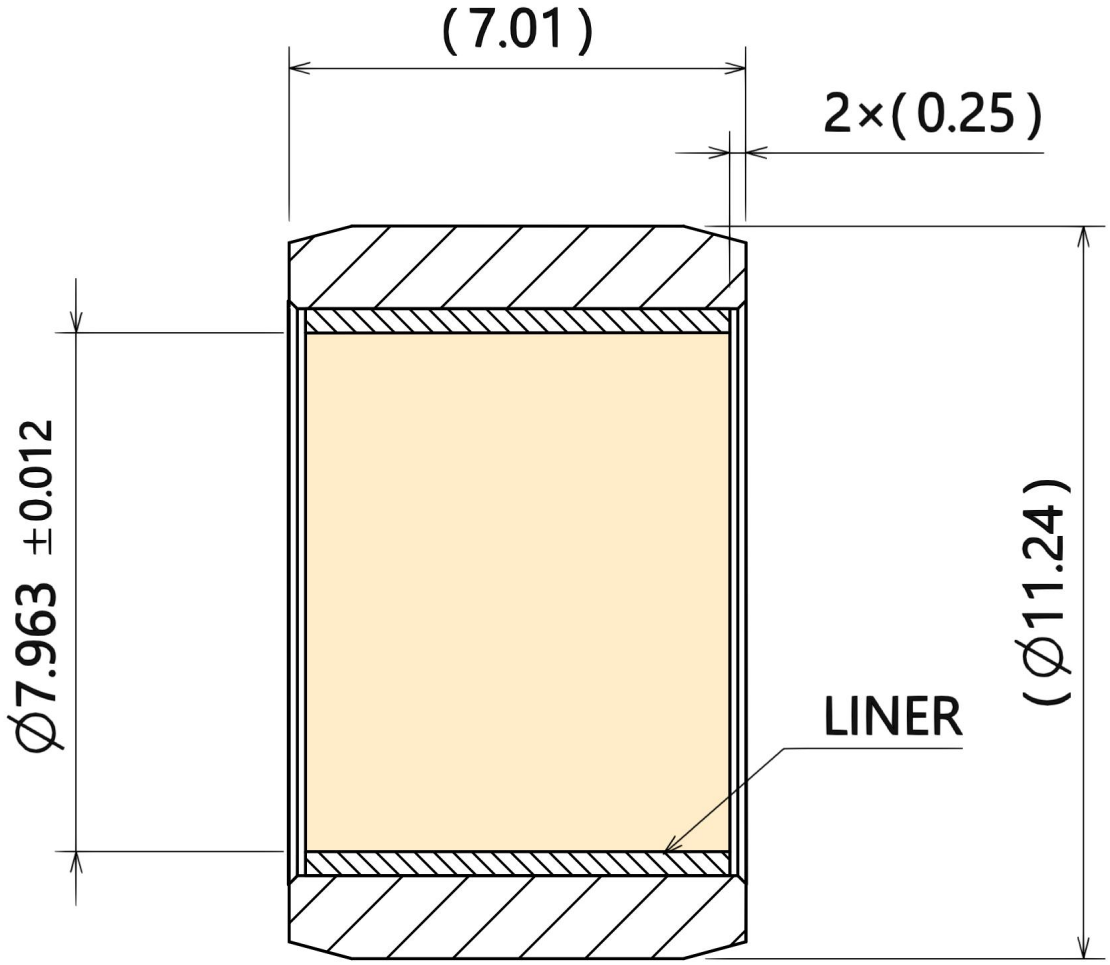


## @LEFT SECTION

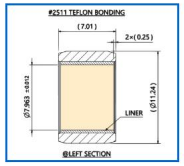

2511 1/1

| | | | |
|---|---|---|---|
| REV. RECORD --- | NMB Flight Propulsion and Aerostructure Products B/U | | |
| DRAWN NANTHIWA K. 2026/06/04 | PART NAME STRAIGHT SLEEVE | | PRODUCT CLASS CODE A |
| CHECKED THAPANON P. 2026/06/04 | PART NO. 61TAHJ05C009-T | | AUTHORITY DATA N/A |
| APPROVED TEERAPOL K. 2026/06/04 | DRAWING NO. C63-04165_DRS01 | REV. --- | SEQ. (PAGE) PA020(2/4) |

AUTHORING TOOLS: CATIA V5 R33 SP5 HF2 (3DA)
SMART EXCHANGE 2024.1.0.1 (PRC), HTML TEMPLATE v1.0

PROPRIETARY INFORMATION FOR NMB/MinebeaMitsumi
UNAUTHORIZED REPRODUCTION PROHIBITED

■#2561 TRIM■

- PER RE45002
  REMOVE EXCESSIVE ADHESIVE AND LINER.
  UNRAVELING AND FRAYING IS NOT PERMITTED OUTSIDE THE SETBACK AREA. LINERS MAY BE RECESSED UP TO THE MAX ALLOWED SETBACK DISTANCES OR ADHERED TO THE METAL CHAMFERS.
  LINERS OR LOOSE LINER MATERIAL SHALL NOT EXTEND INTO THE METAL CHAMFER AREA UNLESS THAT LINER MATERIAL IS ADHERED TO THE METAL CHAMFER.

ต้องกำจัดกาวและ LINER ในส่วนเกินออกให้หมด
ไม่อนุญาตให้มีการคลายตัว หรือการหลุดลุ่ยของวัสดุนอกพื้นที่ SETBACK
LINER อาจเว้นระยะได้สูงสุดตามที่กำหนด หรือติดเข้ากับรอยลบมุมโลหะก็ได้
LINER หรือ LINER ที่หลุดหลวม ห้ามยื่นเข้าไปในบริเวณรอยลบมุมโลหะ
ยกเว้น ในกรณีที่วัสดุนั้นถูกติดแน่นเข้ากับรอยลบมุมอย่างถูกต้อง

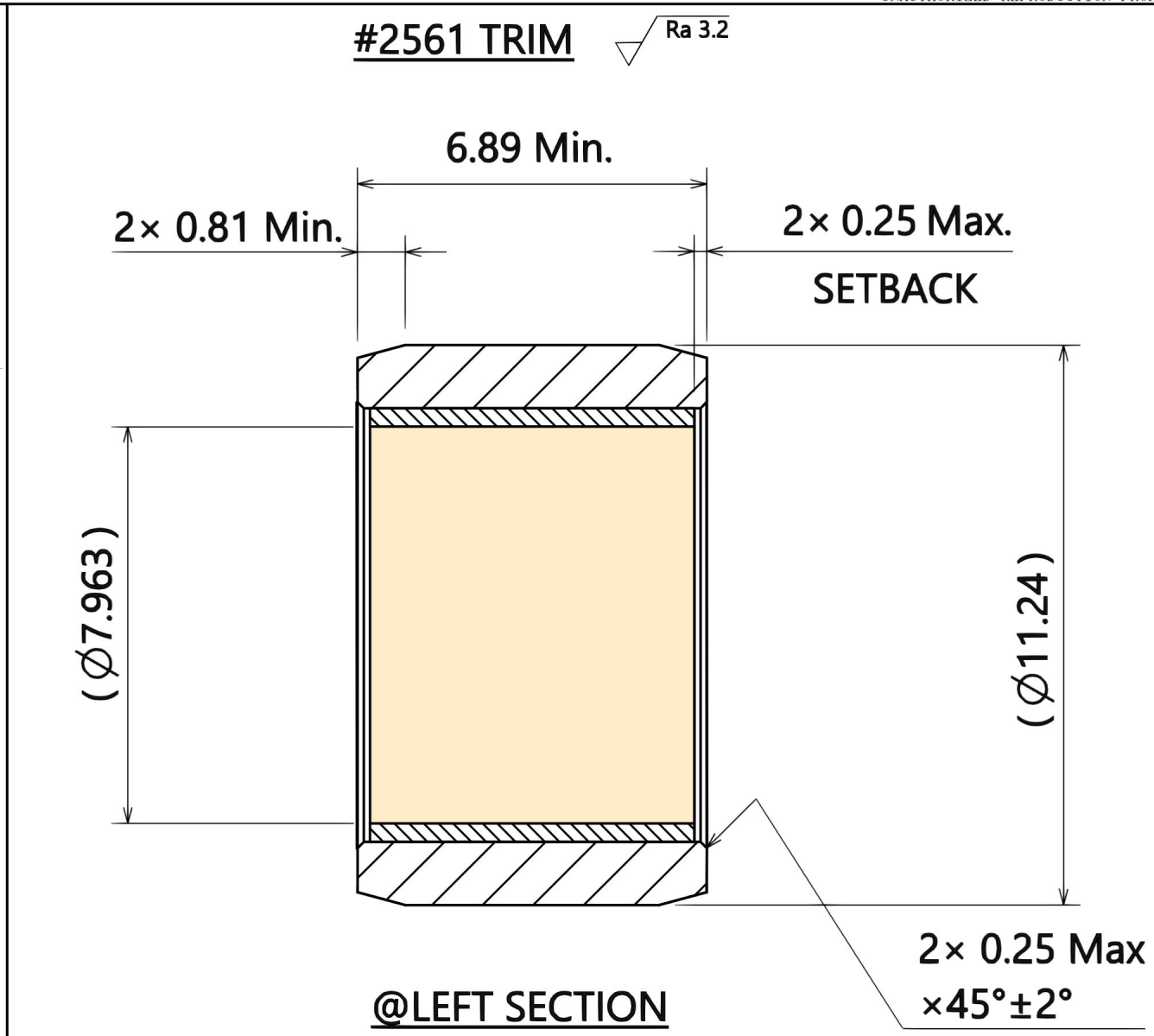


| | | | |
|---|---|---|---|
| REV. RECORD --- | NMB Flight Propulsion and Aerostructure Products B/U | | |
| DRAWN NANTHIWA K. 2026/06/04 | PART NAME STRAIGHT SLEEVE | | PRODUCT CLASS CODE A |
| CHECKED THAPANON P. 2026/06/04 | PART NO. 61TAHJ05C009-T | | AUTHORITY DATA N/A |
| APPROVED TEERAPOL K. 2026/06/04 | DRAWING NO. C63-04165_DRS01 | REV. --- | SEQ. (PAGE) PA030(3/4) |

2561 1/1

AUTHORING TOOLS: CATIA V5 R33 SP5 HF2 (3DA)
SMART EXCHANGE 2024.1.0.1 (PRC), HTML TEMPLATE v1.0

PROPRIETARY INFORMATION FOR NMB/MinebeaMitsumi
UNAUTHORIZED REPRODUCTION PROHIBITED

■#1011 OD GRIND■

■#3531 PASSIVATE■
- Surface area = 3.4 cm²

■#8012 COMPONENT INSPECT (2)■
- PER RQ91222.
- ตาม PD-DV-QC-750000.

■#8601 STOCK■

# #1011 OD GRIND

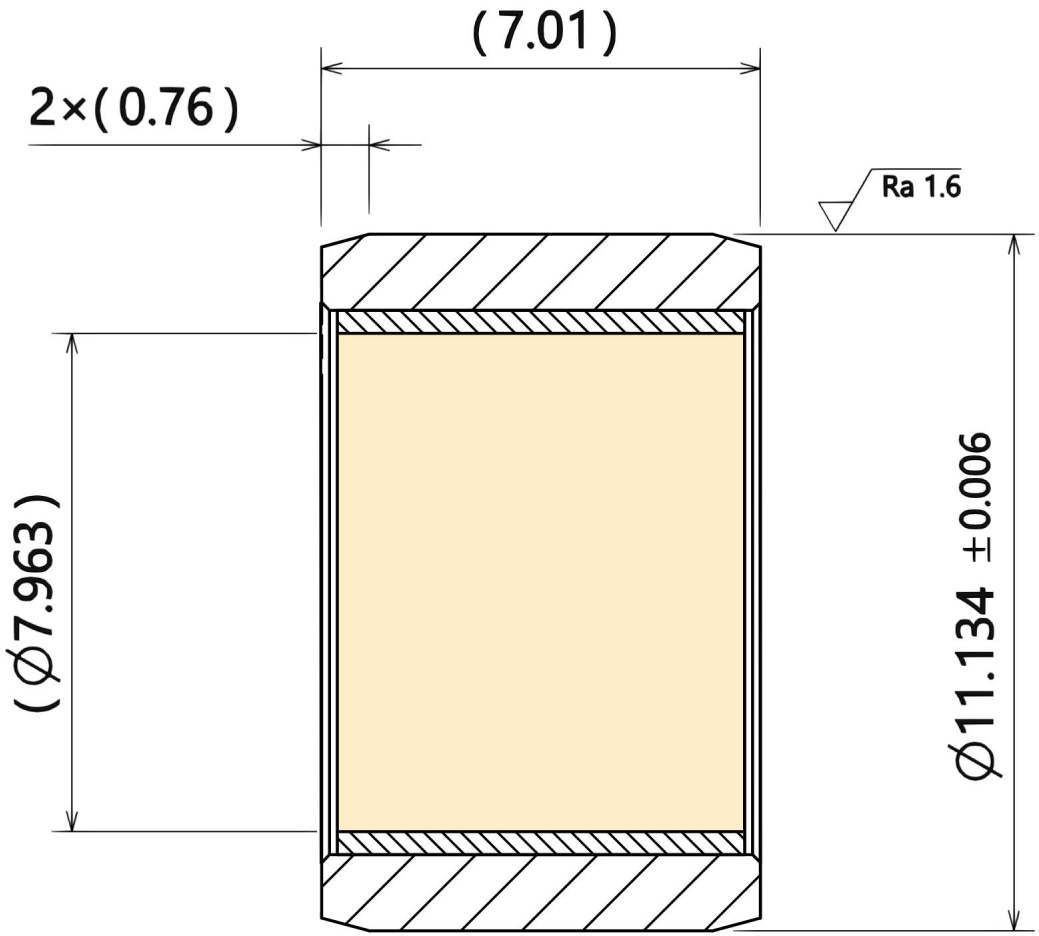


## @LEFT SECTION

| | | | |
|---|---|---|---|
| REV. RECORD --- | NMB Flight Propulsion and Aerostructure Products B/U | | |
| DRAWN NANTHIWA K. 2026/06/04 | PART NAME STRAIGHT SLEEVE | | PRODUCT CLASS CODE A |
| CHECKED THAPANON P. 2026/06/04 | PART NO. 61TAHJ05C009-T | | AUTHORITY DATA N/A |
| APPROVED TEERAPOL K. 2026/06/04 | DRAWING NO. C63-04165_DRS01 | REV. --- | SEQ. (PAGE) STOCK(4/4) |

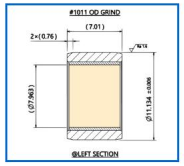

1011 1/1

AUTHORING TOOLS: CATIA V5 R33 SP5 HF2 (3DA)
SMART EXCHANGE 2024.1.0.1 (PRC), HTML TEMPLATE v1.0