SESSION - 1

Graduate Aptitude Test in Engineering

Notations :

1.Options shown in green color and with ✔ icon are correct.

2.Options shown in red color and with ✖ icon are incorrect.

Question Paper Name: CE: CIVIL ENGINEERING 8th Feb Shift1
Number of Questions: 65
Total Marks: 100.0

Wrong answer for MCQ will result in negative marks, (-1/3) for 1 mark Questions and (-2/3) for 2 marks Questions.

General Aptitude

Number of Questions: 10
Section Marks: 15.0

Q.1 to Q.5 carry 1 mark each & Q.6 to Q.10 carry 2 marks each.

Question Number : 1 Question Type : MCQ

Extreme focus on syllabus and studying for tests has become such a dominant concern of Indian students that they close their minds to anything _____ to the requirements of the exam.

(A) related (B) extraneous (C) outside (D) useful

Options :

1. ✖ A
2. ✔ B
3. ✖ C
4. ✖ D

Question Number : 2 Question Type : MCQ

Select the pair that best expresses a relationship similar to that expressed in the pair:

Children : Pediatrician

(A) Adult : Orthopaedist
(B) Females : Gynaecologist
(C) Kidney : Nephrologist
(D) Skin : Dermatologist

Options :

1. ✖ A
2. ✔ B
3. ✖ C
4. ✖ D

Question Number : 3 Question Type : MCQ

The Tamil version of _____ John Abraham-starrer *Madras Cafe* _____cleared by the Censor Board with no cuts last week, but the film's distributors _____ no takers among the exhibitors for a release in Tamil Nadu _____ this Friday.

(A) Mr., was, found, on
(B) a, was, found, at
(C) the, was, found, on
(D) a, being, find at

Options :

1. ✖ A
2. ✖ B
3. ✔ C
4. ✖ D

Question Number : 4 Question Type : MCQ

If ROAD is written as URDG, then SWAN should be written as:

(A) VXDQ
(B) VZDQ
(C) VZDP
(D) UXDQ

Options :

1. ✖ A
2. ✔ B
3. ✖ C
4. ✖ D

Question Number : 5 Question Type : MCQ

A function f(x) is linear and has a value of 29 at $x = -2$ and 39 at $x = 3$. Find its value at $x = 5$.

(A) 59
(B) 45
(C) 43
(D) 35

Options :

1. ✖ A
2. ✖ B
3. ✔ C
4. ✖ D

Question Number : 6 Question Type : MCQ

Alexander turned his attention towards India, since he had conquered Persia.

Which one of the statements below is logically valid and can be inferred from the above sentence?

(A) Alexander would not have turned his attention towards India had he not conquered Persia.

(B) Alexander was not ready to rest on his laurels, and wanted to march to India.

(C) Alexander was completely in control of his army and could command it to move towards India.

(D) Since Alexander's kingdom extended to Indian borders after the conquest of Persia, he was keen to move further.

Options :

1. ✔ A
2. ✖ B
3. ✖ C
4. ✖ D

Question Number : 7 Question Type : MCQ

Most experts feel that in spite of possessing all the technical skills required to be a batsman of the highest order, he is unlikely to be so due to lack of requisite temperament. He was guilty of throwing away his wicket several times after working hard to lay a strong foundation. His critics pointed out that until he addressed this problem, success at the highest level will continue to elude him.

Which of the statement(s) below is/are logically valid and can be inferred from the above passage?

(i) He was already a successful batsman at the highest level.
(ii) He has to improve his temperament in order to become a great batsman.
(iii) He failed to make many of his good starts count.
(iv) Improving his technical skills will guarantee success.

(A) (iii) and (iv)
(B) (ii) and (iii)
(C) (i), (ii) and (iii)
(D) (ii) only

Options :

1. ✖ A
2. ✔ B
3. ✖ C
4. ✖ D

Question Number : 8 Question Type : NAT

The exports and imports (in crores of Rs.) of a country from the year 2000 to 2007 are given in the following bar chart. In which year is the combined percentage increase in imports and exports the highest?

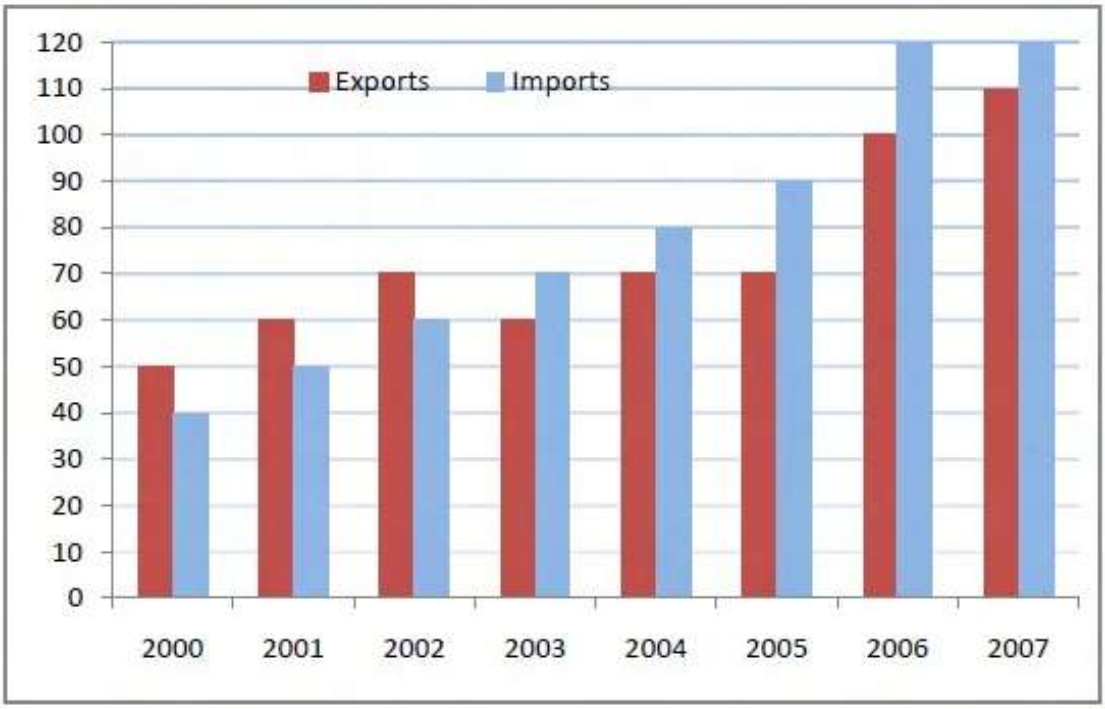

Correct Answer :

2006

Question Number : 9 Question Type : MCQ

Choose the most appropriate equation for the function drawn as a thick line, in the plot below.

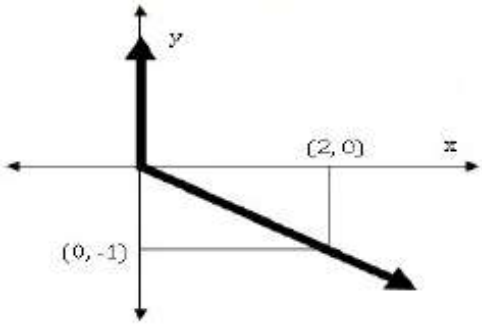

(A) $x = y - |y|$ (B) $x = -(y - |y|)$ (C) $x = y + |y|$ (D) $x = -(y + |y|)$

Options :

1. ✖ A
2. ✔ B
3. ✖ C
4. ✖ D

Question Number : 10 Question Type : MCQ

The head of a newly formed government desires to appoint five of the six selected members P, Q, R, S, T, and U to portfolios of Home, Power, Defense, Telecom, and Finance. U does not want any portfolio if S gets one of the five. R wants either Home or Finance or no portfolio. Q says that if S gets either Power or Telecom, then she must get the other one. T insists on a portfolio if P gets one.

Which is the valid distribution of portfolios?

(A) P-Home, Q-Power, R-Defense, S-Telecom, T-Finance
(B) R-Home, S-Power, P-Defense, Q-Telecom, T-Finance
(C) P-Home, Q-Power, T-Defense, S-Telecom, U-Finance
(D) Q-Home, U-Power, T-Defense, R-Telecom, P-Finance

Options :

1. ✖ A
2. ✔ B
3. ✖ C
4. ✖ D

Civil Engineering

Number of Questions:	55
Section Marks:	85.0

Q.11 to Q.35 carry 1 mark each & Q.36 to Q.65 carry 2 marks each.

Question Number : 11 Question Type : NAT

For what value of p the following set of equations will have no solution?

$$2x + 3y = 5$$
$$3x + py = 10$$

Correct Answer :
4.49 to 4.51

Question Number : 12 Question Type : MCQ

The integral $\int_{x_1}^{x_2} x^2 dx$ with $x_2 > x_1 > 0$ is evaluated analytically as well as numerically using a single application of the trapezoidal rule. If I is the exact value of the integral obtained analytically and J is the approximate value obtained using the trapezoidal rule, which of the following statements is correct about their relationship?

(A) $J > I$
(B) $J < I$
(C) $J = I$
(D) Insufficient data to determine the relationship

Options :
1. ✔ A
2. ✖ B
3. ✖ C
4. ✖ D

Question Number : 13 Question Type : NAT

Consider the following probability mass function (p.m.f.) of a random variable X:

$$p(x, q) = \begin{cases} q & \text{if } X = 0 \\ 1 - q & \text{if } X = 1 \\ 0 & \text{otherwise} \end{cases}$$

If $q = 0.4$, the variance of X is _____.

Correct Answer:
0.23 to 0.25

Question Number : 14 Question Type : MCQ

Workability of concrete can be measured using slump, compaction factor and Vebe time. Consider the following statements for workability of concrete:

(i) As the slump increases, the Vebe time increases
(ii) As the slump increases, the compaction factor increases

Which of the following is TRUE?

(A) Both (i) and (ii) are True
(B) Both (i) and (ii) are False
(C) (i) is True and (ii) is False
(D) (i) is False and (ii) is True

Options :

1. ✖ A
2. ✖ B
3. ✖ C
4. ✔ D

Question Number : 15 Question Type : MCQ

Consider the following statements for air-entrained concrete:

(i) Air-entrainment reduces the water demand for a given level of workability
(ii) Use of air-entrained concrete is required in environments where cyclic freezing and thawing is expected

Which of the following is TRUE?

(A) Both (i) and (ii) are True
(B) Both (i) and (ii) are False
(C) (i) is True and (ii) is False
(D) (i) is False and (ii) is True

Options :

1. ✔ A
2. ✖ B
3. ✖ C
4. ✖ D

Question Number : 16 Question Type : MCQ

Consider the singly reinforced beam shown in the figure below:

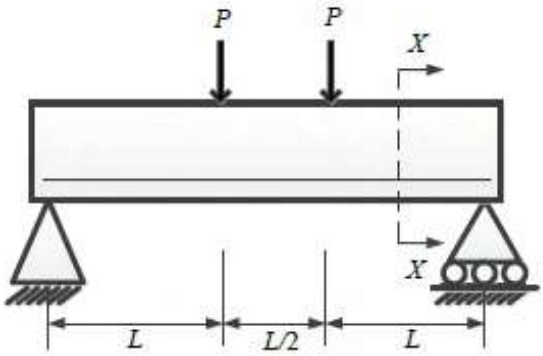

At cross-section XX, which of the following statements is TRUE at the limit state?

(A) The variation of stress is linear and that of strain is non-linear
(B) The variation of strain is linear and that of stress is non-linear
(C) The variation of both stress and strain is linear
(D) The variation of both stress and strain is non-linear

Options :

1. ✖ A
2. ✔ B
3. ✖ C
4. ✖ D

Question Number : 17 Question Type : MCQ

For the beam shown below, the stiffness coefficient K_{22} can be written as

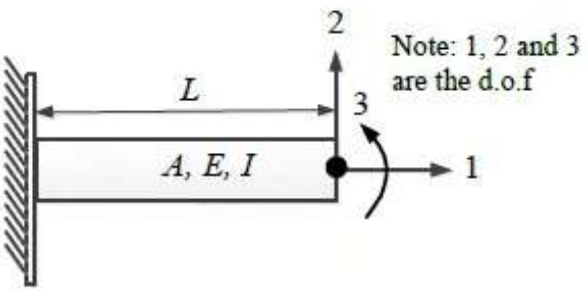

(A) $\frac{6EI}{L^2}$ (B) $\frac{12EI}{L^3}$ (C) $\frac{3EI}{L}$ (D) $\frac{EI}{6L^2}$

Options :

1. ✖ A
2. ✔ B
3. ✖ C
4. ✖ D

Question Number : 18 Question Type : NAT

The development length of a deformed reinforcement bar can be expressed as $(1/k)\ (\phi\sigma_s/\tau_{bd})$. From the IS:456-2000, the value of k can be calculated as _____.

Correct Answer :
6.38 to 6.42

Question Number : 19 Question Type : NAT

For the beam shown below, the value of the support moment M is _____ kN-m.

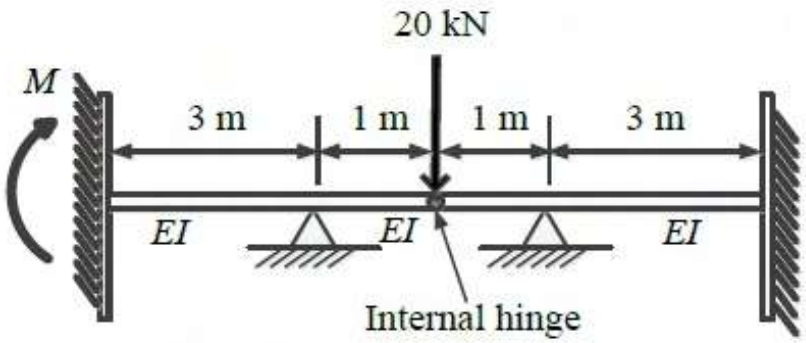

Correct Answer:
5

Question Number : 20 Question Type : NAT

Two triangular wedges are glued together as shown in the following figure. The stress acting normal to the interface, σ_n is _____ MPa.

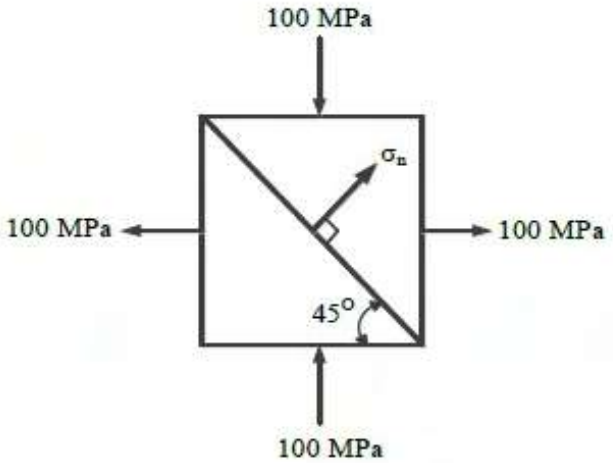

Correct Answer :
0

Question Number : 21 Question Type : MCQ

A fine-grained soil has 60% (by weight) silt content. The soil behaves as *semi-solid* when water content is between 15% and 28%. The soil behaves *fluid-like* when the water content is more than 40%. The '*Activity*' of the soil is

(A) 3.33 (B) 0.42 (C) 0.30 (D) 0.20

Options :

1. ✖ A
2. ✖ B
3. ✔ C
4. ✖ D

Question Number : 22 Question Type : MCQ

Which of the following statements is TRUE for the relation between discharge velocity and seepage velocity?

(A) Seepage velocity is always smaller than discharge velocity
(B) Seepage velocity can never be smaller than discharge velocity
(C) Seepage velocity is equal to the discharge velocity
(D) No relation between seepage velocity and discharge velocity can be established

Options :

1. ✖ A
2. ✔ B
3. ✖ C
4. ✖ D

Question Number : 23 Question Type : MCQ

Which of the following statements is TRUE for degree of disturbance of collected soil sample?

(A) Thinner the sampler wall, lower the degree of disturbance of collected soil sample
(B) Thicker the sampler wall, lower the degree of disturbance of collected soil sample
(C) Thickness of the sampler wall and the degree of disturbance of collected soil sample are unrelated
(D) The degree of disturbance of collected soil sample is proportional to the inner diameter of the sampling tube

Options :

1. ✔ A
2. ✖ B
3. ✖ C
4. ✖ D

Question Number : 24 Question Type : MCQ

In an unconsolidated undrained triaxial test, it is observed that an increase in cell pressure from 150 kPa to 250 kPa leads to a pore pressure increase of 80 kPa. It is further observed that, an increase of 50 kPa in deviatoric stress results in an increase of 25 kPa in the pore pressure. The value of *Skempton's pore pressure parameter B* is:

(A) 0.5 (B) 0.625 (C) 0.8 (D) 1.0

Options :

1. ✖ A
2. ✖ B
3. ✔ C
4. ✖ D

Question Number : 25 Question Type : MCQ

Which of the following statements is NOT correct?

(A) Loose sand exhibits contractive behavior upon shearing
(B) Dense sand when sheared under undrained condition, may lead to generation of negative pore pressure
(C) Black cotton soil exhibits expansive behavior
(D) Liquefaction is the phenomenon where cohesionless soil near the downstream side of dams or sheet-piles loses its shear strength due to high upward hydraulic gradient

Options :

1. ✖ A
2. ✖ B
3. ✖ C
4. ✔ D

Question Number : 26 Question Type : MCQ

In a two-dimensional steady flow field, in a certain region of the x-y plane, the velocity component in the x-direction is given by $v_x = x^2$ and the density varies as $\rho = \frac{1}{x}$. Which of the following is a valid expression for the velocity component in the y-direction, v_y?

(A) $v_y = -x/y$ (B) $v_y = x/y$ (C) $v_y = -xy$ (D) $v_y = xy$

Options :

1. ✖ A
2. ✖ B
3. ✔ C
4. ✖ D

Question Number : 27 Question Type : MCQ

For steady incompressible flow through a closed-conduit of uniform cross-section, the direction of flow will always be:

(A) from higher to lower elevation
(B) from higher to lower pressure
(C) from higher to lower velocity
(D) from higher to lower piezometric head

Options :

1. ✖ A
2. ✖ B
3. ✖ C
4. ✔ D

Question Number : 28 Question Type : MCQ

A circular pipe has a diameter of 1 m, bed slope of 1 in 1000, and Manning's roughness coefficient equal to 0.01. It may be treated as an open channel flow when it is flowing just full, *i.e.*, the water level just touches the crest. The discharge in this condition is denoted by Q_{full}. Similarly, the discharge when the pipe is flowing half-full, *i.e.*, with a flow depth of 0.5 m, is denoted by Q_{half}. The ratio Q_{full} / Q_{half} is:

(A) 1 (B) $\sqrt{2}$ (C) 2 (D) 4

Options :

1. ✖ A
2. ✖ B
3. ✔ C
4. ✖ D

Question Number : 29 Question Type : MCQ

The two columns below show some parameters and their possible values.

Parameter	Value
P – Gross Command Area	I – 100 hectares/cumec
Q – Permanent Wilting Point	II – 6 °C
R – Duty of canal water	III – 1000 hectares
S – Delta of wheat	IV – 1000 cm
	V – 40 cm
	VI – 0.12

Which of the following options matches the parameters and the values correctly?

(A) P-I, Q-II, R-III, S-IV
(B) P-III, Q-VI, R-I, S-V
(C) P-I, Q-V, R-VI, S-II
(D) P-III, Q-II, R-V, S-IV

Options :

1. ✖ A
2. ✔ B
3. ✖ C
4. ✖ D

Question Number : 30 Question Type : MCQ

Total Kjeldahl Nitrogen (TKN) concentration (mg/L as N) in domestic sewage is the sum of the concentrations of:

(A) organic and inorganic nitrogen in sewage
(B) organic nitrogen and nitrate in sewage
(C) organic nitrogen and ammonia in sewage
(D) ammonia and nitrate in sewage

Options :

1. ✖ A
2. ✖ B
3. ✔ C
4. ✖ D

Question Number : 31 Question Type : MCQ

Solid waste generated from an industry contains only two components, X and Y as shown in the table below

Component	Composition (% weight)	Density (kg/m^3)
X	c_1	ρ_1
Y	c_2	ρ_2

Assuming $(c_1 + c_2) = 100$, the composite density of the solid waste (ρ) is given by:

(A) $\dfrac{100}{\left(\dfrac{c_1}{\rho_1} + \dfrac{c_2}{\rho_2}\right)}$

(B) $100\left(\dfrac{\rho_1}{c_1} + \dfrac{\rho_2}{c_2}\right)$

(C) $100(c_1\rho_1 + c_2\rho_2)$

(D) $100\left(\dfrac{\rho_1\rho_2}{c_1\rho_1 + c_2\rho_2}\right)$

Options :

1. ✔ A
2. ✖ B
3. ✖ C
4. ✖ D

Question Number : 32 Question Type : NAT

The penetration value of a bitumen sample tested at 25°C is 80. When this sample is heated to 60°C and tested again, the needle of the penetration test apparatus penetrates the bitumen sample by *d* mm. The value of *d* CANNOT be less than _____ mm.

Correct Answer :

8

Question Number : 33 Question Type : MCQ

Which of the following statements CANNOT be used to describe free flow speed (u_f) of a traffic stream?

(A) u_f is the speed when flow is negligible
(B) u_f is the speed when density is negligible
(C) u_f is affected by geometry and surface conditions of the road
(D) u_f is the speed at which flow is maximum and density is optimum

Options :

1. ✖ A
2. ✖ B
3. ✖ C
4. ✔ D

Question Number : 34 Question Type : MCQ

Which of the following statements is FALSE?

(A) Plumb line is along the direction of gravity
(B) Mean Sea Level (MSL) is used as a reference surface for establishing the horizontal control
(C) Mean Sea Level (MSL) is a simplification of the Geoid
(D) Geoid is an equi-potential surface of gravity

Options :

1. ✖ A
2. ✔ B
3. ✖ C
4. ✖ D

Question Number : 35 Question Type : MCQ

In a closed loop traverse of 1 km total length, the closing errors in departure and latitude are 0.3 m and 0.4 m, respectively. The relative precision of this traverse will be:

(A) 1: 5000 (B) 1: 4000 (C) 1: 3000 (D) 1: 2000

Options :

1. ✖ A
2. ✖ B
3. ✖ C
4. ✔ D

Question Number : 36 Question Type : MCQ

The smallest and largest Eigen values of the following matrix are:

$$\begin{bmatrix} 3 & -2 & 2 \\ 4 & -4 & 6 \\ 2 & -3 & 5 \end{bmatrix}$$

(A) 1.5 and 2.5 (B) 0.5 and 2.5 (C) 1.0 and 3.0 (D) 1.0 and 2.0

Options :

1. ✖ A
2. ✖ B
3. ✖ C
4. ✔ D

Question Number : 37 Question Type : NAT

The quadratic equation $x^2 - 4x + 4 = 0$ is to be solved numerically, starting with the initial guess $x_0 = 3$. The Newton-Raphson method is applied once to get a new estimate and then the Secant method is applied once using the initial guess and this new estimate. The estimated value of the root after the application of the Secant method is _____.

Correct Answer :
2.32 to 2.34

Question Number : 38 Question Type : MCQ

Consider the following differential equation:

$$x(ydx + xdy)\cos\frac{y}{x} = y(xdy - ydx)\sin\frac{y}{x}$$

Which of the following is the solution of the above equation (c is an arbitrary constant)?

(A) $\frac{x}{y}\cos\frac{y}{x} = c$ (B) $\frac{x}{y}\sin\frac{y}{x} = c$ (C) $xy\cos\frac{y}{x} = c$ (D) $xy\sin\frac{y}{x} = c$

Options :
1. ✖ A
2. ✖ B
3. ✔ C
4. ✖ D

Question Number : 39 Question Type : MCQ

Consider the following complex function:

$$f(z) = \frac{9}{(z-1)(z+2)^2}$$

Which of the following is one of the residues of the above function?

(A) -1 (B) 9/16 (C) 2 (D) 9

Options :
1. ✔ A
2. ✖ B
3. ✖ C
4. ✖ D

Question Number : 40 Question Type : NAT

The directional derivative of the field $u(x, y, z) = x^2 - 3yz$ in the direction of the vector $(\hat{i} + \hat{j} - 2\hat{k})$ at point $(2, -1, 4)$ is _____.

Correct Answer:
-5.72 to -5.70

Question Number : 41 Question Type : NAT

The composition of an air-entrained concrete is given below:

Water	:	184 kg/m^3
Ordinary Portland Cement (OPC)	:	368 kg/m^3
Sand	:	606 kg/m^3
Coarse aggregate	:	1155 kg/m^3

Assume the specific gravity of OPC, sand and coarse aggregate to be 3.14, 2.67 and 2.74, respectively. The air content is _____ liters/ m^3.

Correct Answer :
49.5 to 51.0

Question Number : 42 Question Type : NAT

A bracket plate connected to a column flange transmits a load of 100 kN as shown in the following figure. The maximum force for which the bolts should be designed is _____ kN.

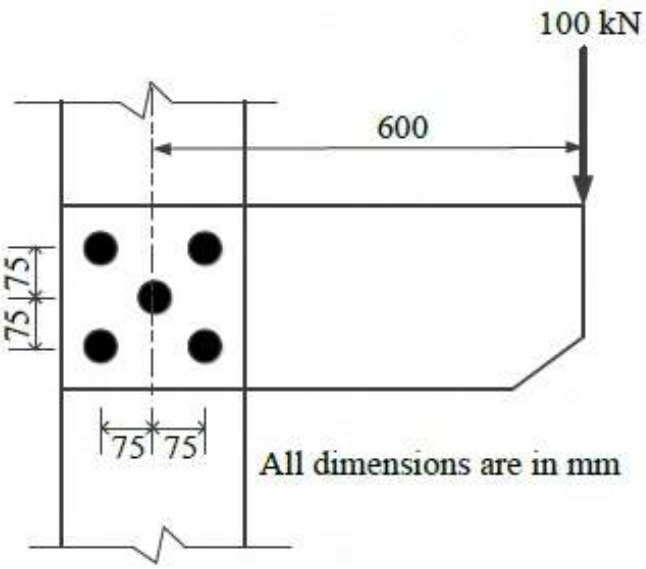

Correct Answer :
155 to 156.3

Question Number : 43 Question Type : NAT

Consider the singly reinforced beam section given below (left figure). The stress block parameters for the cross-section from IS:456-2000 are also given below (right figure). The moment of resistance for the given section by the limit state method is _____ kN-m.

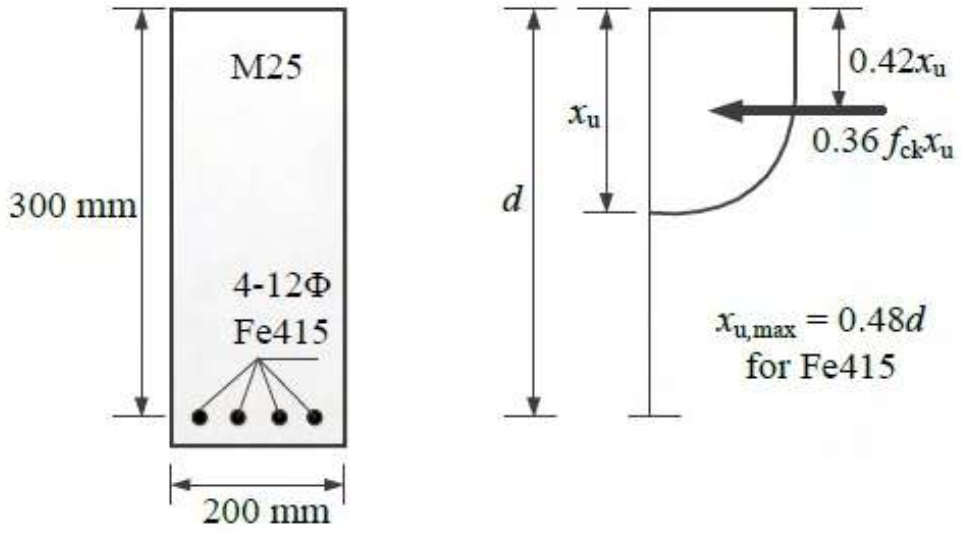

Correct Answer :

42 to 43

Question Number : 44 Question Type : NAT

For formation of *collapse mechanism* in the following figure, the minimum value of P_u is cM_p/L. M_p and $3M_p$ denote the plastic moment capacities of beam sections as shown in this figure. The value of c is _____.

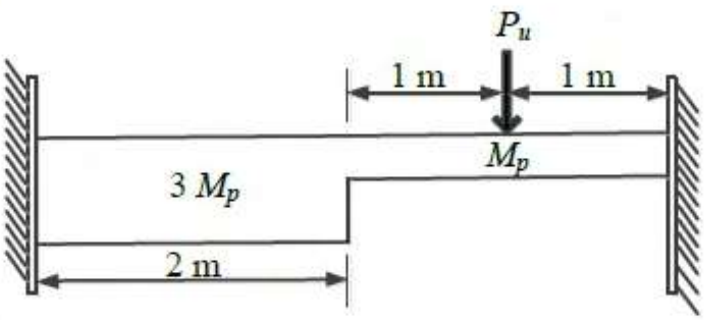

Correct Answer :

3.30 to 3.40

Question Number : 45 Question Type : NAT

A tapered circular rod of diameter varying from 20 mm to 10 mm is connected to another uniform circular rod of diameter 10 mm as shown in the following figure. Both bars are made of same material with the modulus of elasticity, $E = 2\text{x}10^5$ MPa. When subjected to a load $P = 30\pi$ kN, the deflection at point A is _____ mm.

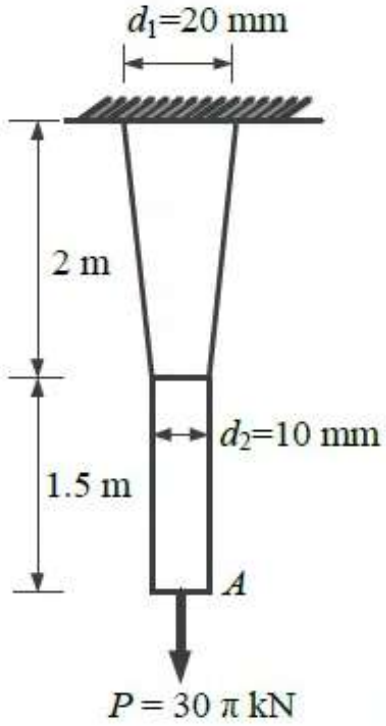

Correct Answer :
14.5 to 15.5

Question Number : 46 Question Type : NAT

Two beams are connected by a linear spring as shown in the following figure. For a load P as shown in the figure, the percentage of the applied load P carried by the spring is _____.

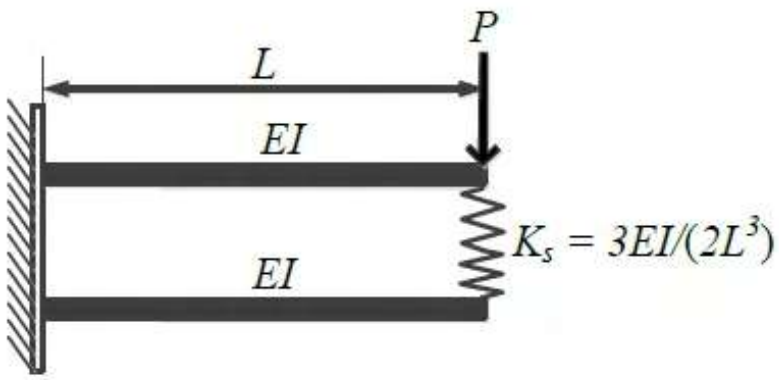

Correct Answer :
25

Question Number : 47 Question Type : NAT

For the 2D truss with the applied loads shown below, the strain energy in the member XY is _____ kN-m. For member XY, assume $AE = 30$ kN, where A is cross-section area and E is the modulus of elasticity.

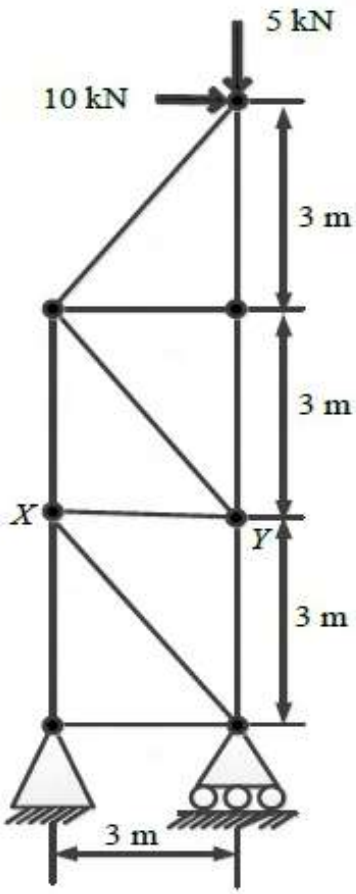

Correct Answer :

5

Question Number : 48 Question Type : MCQ

An earth embankment is to be constructed with compacted cohesionless soil. The volume of the embankment is 5000 m^3 and the target dry unit weight is 16.2 kN/m^3. Three nearby sites (see figure below) have been identified from where the required soil can be transported to the construction site. The void ratios (e) of different sites are shown in the figure. Assume the specific gravity of soil to be 2.7 for all three sites. If the cost of transportation per km is twice the cost of excavation per m^3 of borrow pits, which site would you choose as the most economic solution? (Use unit weight of water = 10 kN/m^3)

(A) Site X (B) Site Y (C) Site Z (D) Any of the sites

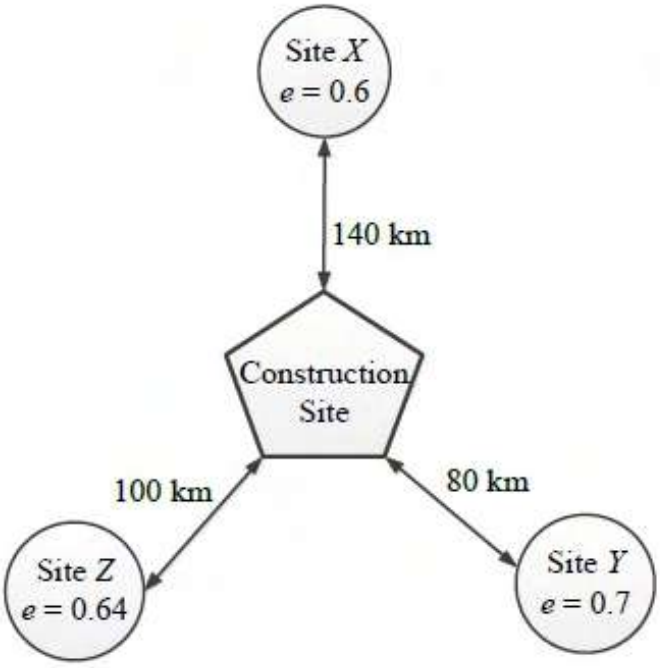

Options :

1. ✔ A
2. ✖ B
3. ✖ C
4. ✖ D

Question Number : 49 Question Type : NAT

A water tank is to be constructed on the soil deposit shown in the figure below. A circular footing of diameter 3 m and depth of embedment 1 m has been designed to support the tank. The total vertical load to be taken by the footing is 1500 kN. Assume the unit weight of water as 10 kN/m^3 and the load dispersion pattern as 2V:1H. The expected settlement of the tank due to primary consolidation of the clay layer is _____ mm.

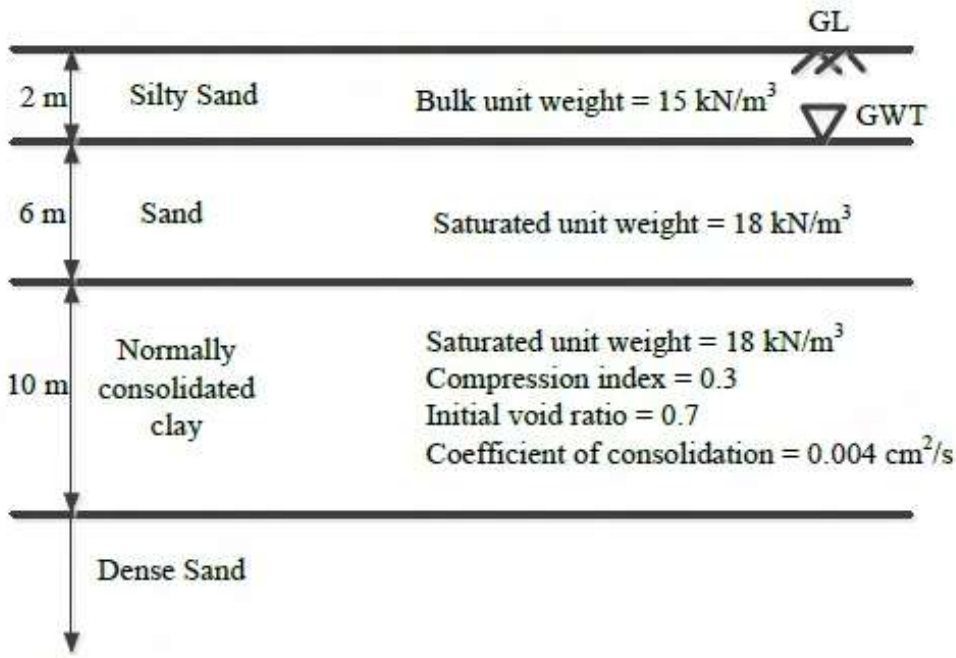

Correct Answer :
50 to 55

Question Number : 50 Question Type : NAT

A 20 m thick clay layer is sandwiched between a silty sand layer and a gravelly sand layer. The layer experiences 30 mm settlement in 2 years.

Given:

$$T_v = \begin{cases} \frac{\pi}{4}\left(\frac{U}{100}\right)^2 & \text{for } U \leq 60\% \\ 1.781 - 0.933\log_{10}(100 - U) & \text{for } U > 60\% \end{cases}$$

where T_v is the time factor and U is the degree of consolidation in %.

If the coefficient of consolidation of the layer is 0.003 cm^2/s, the deposit will experience a total of 50 mm settlement in the next _____ years.

Correct Answer:
4.0 to 5.0

Question Number : 51 Question Type : NAT

A non-homogeneous soil deposit consists of a silt layer sandwiched between a fine-sand layer at top and a clay layer below. Permeability of the silt layer is 10 times the permeability of the clay layer and one-tenth of the permeability of the sand layer. Thickness of the silt layer is 2 times the thickness of the sand layer and two-third of the thickness of the clay layer. The ratio of equivalent horizontal and equivalent vertical permeability of the deposit is _____.

Correct Answer :
10.0 to 12.0

Question Number : 52 Question Type : NAT

A square footing (2 m x 2 m) is subjected to an inclined point load, P as shown in the figure below. The water table is located well below the base of the footing. Considering one-way eccentricity, the *net safe* load carrying capacity of the footing for a factor of safety of 3.0 is _____ kN.

The following factors may be used:

Bearing capacity factors: $N_q = 33.3$, $N_\gamma = 37.16$; Shape factors: $F_{qs} = F_{\gamma s} = 1.314$; Depth factors: $F_{qd} = F_{\gamma d} = 1.113$; Inclination factors: $F_{qi} = 0.444$, $F_{\gamma i} = 0.02$

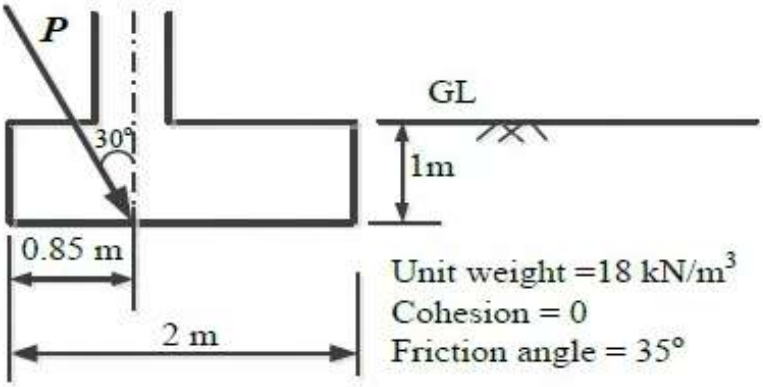

Correct Answer :
434 to 444

Question Number : 53 Question Type : NAT

Two reservoirs are connected through a 930 m long, 0.3 m diameter pipe, which has a gate valve. The pipe entrance is sharp (loss coefficient = 0.5) and the valve is half-open (loss coefficient = 5.5). The head difference between the two reservoirs is 20 m. Assume the friction factor for the pipe as 0.03 and g =10 m/s^2. The discharge in the pipe accounting for all minor and major losses is _____ m^3/s.

Correct Answer:
0.140 to 0.142

Question Number : 54 Question Type :NAT

A hydraulic jump is formed in a 2 m wide rectangular channel which is horizontal and frictionless. The post-jump depth and velocity are 0.8 m and 1 m/s, respectively. The pre-jump velocity is _____ m/s. (use $g = 10$ m/s^2)

Correct Answer :
4.75 to 4.85

Question Number : 55 Question Type : NAT

A short reach of a 2 m wide rectangular open channel has its bed level rising in the direction of flow at a slope of 1 in 10000. It carries a discharge of 4 m^3/s and its Manning's roughness coefficient is 0.01. The flow in this reach is gradually varying. At a certain section in this reach, the depth of flow was measured as 0.5 m. The rate of change of the water depth with distance, dy/dx, at this section is _____ (use $g = 10$ m/s^2).

Correct Answer :
0.0031 to 0.0033

Question Number : 56 Question Type : MCQ

The drag force, F_D, on a sphere kept in a uniform flow field depends on the diameter of the sphere, D; flow velocity, V; fluid density, ρ; and dynamic viscosity, μ. Which of the following options represents the non-dimensional parameters which could be used to analyze this problem?

(A) $\frac{F_D}{VD}$ and $\frac{\mu}{\rho VD}$

(B) $\frac{F_D}{\rho V D^2}$ and $\frac{\rho VD}{\mu}$

(C) $\frac{F_D}{\rho V^2 D^2}$ and $\frac{\rho VD}{\mu}$

(D) $\frac{F_D}{\rho V^3 D^3}$ and $\frac{\mu}{\rho VD}$

Options :
1. ✖ A
2. ✖ B
3. ✔ C
4. ✖ D

Question Number : 57 Question Type : NAT

In a catchment, there are four rain-gauge stations, *P*, *Q*, *R*, and *S*. Normal annual precipitation values at these stations are 780 mm, 850 mm, 920 mm, and 980 mm, respectively. In the year 2013, stations *Q*, *R*, and *S*, were operative but *P* was not. Using the normal ratio method, the precipitation at station *P* for the year 2013 has been estimated as 860 mm. If the observed precipitation at stations *Q* and *R* for the year 2013 were 930 mm and 1010 mm, respectively; what was the observed precipitation (in mm) at station *S* for that year?

Correct Answer:
1093 to 1094

Question Number : 58 Question Type : NAT

The 4-hr unit hydrograph for a catchment is given in the table below. What would be the maximum ordinate of the S-curve (in m^3/s) derived from this hydrograph?

Time (hr)	0	2	4	6	8	10	12	14	16	18	20	22	24
Unit hydrograph ordinate (m^3/s)	0	0.6	3.1	10	13	9	5	2	0.7	0.3	0.2	0.1	0

Correct Answer :
21.9 to 22.1

Question Number : 59 Question Type : NAT

The concentration of Sulfur Dioxide (SO_2) in ambient atmosphere was measured as 30 $\mu g/m^3$. Under the same conditions, the above SO_2 concentration expressed in ppm is _____.

Given: $P/(RT) = 41.6$ mol/m^3; where, P = Pressure; T = Temperature; R = universal gas constant; Molecular weight of SO_2 = 64.

Correct Answer :
0.010 to 0.012

Question Number : 60 Question Type : NAT

Consider a primary sedimentation tank (PST) in a water treatment plant with Surface Overflow Rate (SOR) of 40 $m^3/m^2/d$. The diameter of the spherical particle which will have 90 percent theoretical removal efficiency in this tank is _____ μm. Assume that settling velocity of the particles in water is described by Stokes's Law.

Given: Density of water = 1000 kg/m^3; Density of particle = 2650 kg/m^3; g = 9.81 m/s^2; Kinematic viscosity of water (ν) = 1.10×10^{-6} m^2/s

Correct Answer :
20.0 to 24.0

Question Number : 61 Question Type : NAT

The acceleration-time relationship for a vehicle subjected to non-uniform acceleration is,

$$\frac{dv}{dt} = (\alpha - \beta v_0)e^{-\beta t}$$

where, v is the speed in m/s, t is the time in s, α and β are parameters, and v_0 is the initial speed in m/s. If the accelerating behavior of a vehicle, whose driver intends to overtake a slow moving vehicle ahead, is described as,

$$\frac{dv}{dt} = (\alpha - \beta v)$$

Considering $\alpha = 2$ m/s^2, $\beta = 0.05$ s^{-1} and $\frac{dv}{dt} = 1.3$ m/s^2 at $t = 3$ s, the distance (in m) travelled by the vehicle in 35 s is _____.

Correct Answer :
895 to 905

Question Number : 62 Question Type : MCQ

On a circular curve, the rate of superelevation is e. While negotiating the curve a vehicle comes to a stop. It is seen that the stopped vehicle does not slide inwards (in the radial direction). The coefficient of side friction is f. Which of the following is true:

(A) $e \leq f$ (B) $f < e < 2f$ (C) $e \geq 2f$ (D) none of the above

Options :
1. ✔ A
2. ✖ B
3. ✖ C
4. ✖ D

Question Number : 63 Question Type : NAT

A sign is required to be put up asking drivers to slow down to 30 km/h before entering Zone Y (see figure). On this road, vehicles require 174 m to slow down to 30 km/h (the distance of 174 m includes the distance travelled during the perception-reaction time of drivers). The sign can be read by 6/6 vision drivers from a distance of 48 m. The sign is placed at a distance of x m from the start of Zone Y so that even a 6/9 vision driver can slow down to 30 km/h before entering the zone. The minimum value of x is _____ m.

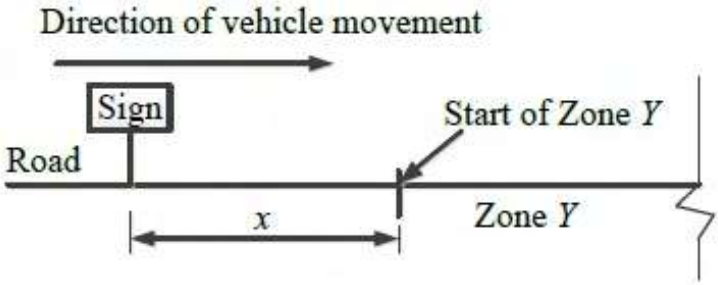

Correct Answer :

141.84 to 142.32

Question Number : 64 Question Type : MCQ

In a survey work, three independent angles X, Y and Z were observed with weights W_X, W_Y, W_Z, respectively. The weight of the sum of angles X, Y and Z is given by:

(A) $1/\left(\frac{1}{W_X}+\frac{1}{W_Y}+\frac{1}{W_Z}\right)$

(B) $\left(\frac{1}{W_X}+\frac{1}{W_Y}+\frac{1}{W_Z}\right)$

(C) $W_X+W_Y+W_Z$

(D) $W_X^2+W_Y^2+W_Z^2$

Options :

1. ✔ A
2. ✖ B
3. ✖ C
4. ✖ D

Question Number : 65 Question Type : MCQ

In a region with magnetic declination of 2°E, the magnetic Fore bearing (FB) of a line AB was measured as N79°50' E. There was local attraction at A. To determine the correct magnetic bearing of the line, a point O was selected at which there was no local attraction. The magnetic FB of line AO and OA were observed to be S52°40'E and N50°20'W, respectively. What is the true FB of line AB?

(A) N81°50'E (B) N82°10'E (C) N84°10'E (D) N77°50'E

Options :

1. ✖ A
2. ✖ B
3. ✔ C

4. ✖ D

SESSION - 2

Graduate Aptitude Test in Engineering

Notations :

1.Options shown in green color and with ✔ icon are correct.

2.Options shown in red color and with ✖ icon are incorrect.

Question Paper Name: CE: CIVIL ENGINEERING 8th Feb Shift2
Number of Questions: 65
Total Marks: 100.0

Wrong answer for MCQ will result in negative marks, (-1/3) for 1 mark Questions and (-2/3) for 2 marks Questions.

General Aptitude

Number of Questions: 10
Section Marks: 15.0

Q.1 to Q.5 carry 1 mark each & Q.6 to Q.10 carry 2 marks each.

Question Number : 1 Question Type : MCQ

Choose the most appropriate word from the options given below to complete the following sentence.

The official answered _____ that the complaints of the citizen would be looked into.

(A) respectably (B) respectfully (C) reputably (D) respectively

Options :

1. ✖ A
2. ✔ B
3. ✖ C
4. ✖ D

Question Number : 2 Question Type : MCQ

Choose the statement where underlined word is used correctly.

(A) The minister <u>insured</u> the victims that everything would be all right.
(B) He <u>ensured</u> that the company will not have to bear any loss.
(C) The actor got himself <u>ensured</u> against any accident.
(D) The teacher <u>insured</u> students of good results.

Options :

1. ✖ A
2. ✔ B
3. ✖ C
4. ✖ D

Question Number : 3 Question Type : MCQ

Which word is not a synonym for the word *vernacular*?

(A) regional (B) indigenous (C) indigent (D) colloquial

Options :

1. ✖ A
2. ✖ B
3. ✔ C
4. ✖ D

Question Number : 4 Question Type : MCQ

Mr. Vivek walks 6 meters North-east, then turns and walks 6 meters South-east, both at 60 degrees to east. He further moves 2 meters South and 4 meters West. What is the straight distance in metres between the point he started from and the point he finally reached?

(A) $2\sqrt{2}$
(B) 2
(C) $\sqrt{2}$
(D) $1/\sqrt{2}$

Options :

1. ✔ A
2. ✖ B
3. ✖ C
4. ✖ D

Question Number : 5 Question Type : MCQ

Four cards are randomly selected from a pack of 52 cards. If the first two cards are kings, what is the probability that the third card is a king?

(A) 4/52 (B) 2/50 (C) $(1/52)\times(1/52)$ (D) $(1/52)\times(1/51)\times(1/50)$

Options :

1. ✖ A
2. ✔ B
3. ✖ C
4. ✖ D

Question Number : 6 Question Type : MCQ

The word similar in meaning to 'dreary' is

(A) cheerful
(B) dreamy
(C) hard
(D) dismal

Options :

1. ✖ A
2. ✖ B
3. ✖ C

4. ✔ D

Question Number : 7 Question Type : MCQ

The given question is followed by two statements; select the most appropriate option that solves the question.

Capacity of a solution tank A is 70% of the capacity of tank B. How many gallons of solution are in tank A and tank B?

Statements:

(I) Tank A is 80% full and tank B is 40% full.

(II) Tank A if full contains 14,000 gallons of solution.

(A) Statement I alone is sufficient.
(B) Statement II alone is sufficient.
(C) Either statement I or II alone is sufficient.
(D) Both the statements I and II together are sufficient.

Options :

1. ✖ A
2. ✖ B
3. ✖ C
4. ✔ D

Question Number : 8 Question Type : NAT

How many four digit numbers can be formed with the 10 digits 0, 1, 2, ..., 9 if no number can start with 0 and if repetitions are not allowed?

Correct Answer :

4536

Question Number : 9 Question Type : MCQ

Read the following table giving sales data of five types of batteries for years 2006 to 2012:

Year	Type I	Type II	Type III	Type IV	Type V
2006	75	144	114	102	108
2007	90	126	102	84	126
2008	96	114	75	105	135
2009	105	90	150	90	75
2010	90	75	135	75	90
2011	105	60	165	45	120
2012	115	85	160	100	145

Out of the following, which type of battery achieved highest growth between the years 2006 and 2012?

(A) Type V
(B) Type III
(C) Type II
(D) Type I

Options :

1. ✖ A
2. ✖ B
3. ✖ C
4. ✔ D

Question Number : 10 Question Type : MCQ

There are 16 teachers who can teach Thermodynamics (TD), 11 who can teach Electrical Sciences (ES), and 5 who can teach both TD and Engineering Mechanics (EM). There are a total of 40 teachers. 6 cannot teach any of the three subjects, i.e. EM, ES or TD. 6 can teach only ES. 4 can teach all three subjects, i.e. EM, ES and TD. 4 can teach ES and TD. How many can teach both ES and EM but not TD?

(A) 1 (B) 2 (C) 3 (D) 4

Options :

1. ✔ A
2. ✖ B
3. ✖ C
4. ✖ D

Civil Engineering

Number of Questions:	55
Section Marks:	85.0

Q.11 to Q.35 carry 1 mark each & Q.36 to Q.65 carry 2 marks each.

Question Number : 11 Question Type : MCQ

While minimizing the function $f(x)$, necessary and sufficient conditions for a point, x_0 to be a minima are:

(A) $f'(x_0) > 0$ and $f''(x_0) = 0$
(B) $f'(x_0) < 0$ and $f''(x_0) = 0$
(C) $f'(x_0) = 0$ and $f''(x_0) < 0$
(D) $f'(x_0) = 0$ and $f''(x_0) > 0$

Options :

1. ✖ A
2. ✖ B
3. ✖ C
4. ✔ D

Question Number : 12 Question Type : NAT

In Newton-Raphson iterative method, the initial guess value (x_{ini}) is considered as zero while finding the roots of the equation: $f(x) = -2 + 6x - 4x^2 + 0.5x^3$. The correction, Δx, to be added to x_{ini} in the first iteration is _____.

Correct Answer :
0.3 to 0.4

Question Number : 13 Question Type : MCQ

Given, $i=\sqrt{-1}$, the value of the definite integral, $I=\int_0^{\pi/2}\frac{\cos x+i\sin x}{\cos x-i\sin x}dx$ is:

(A) 1 (B) -1 (C) i (D) $-i$

Options :
1. ✖ A
2. ✖ B
3. ✔ C
4. ✖ D

Question Number : 14 Question Type : MCQ

$\lim_{x\to\infty}\left(1+\frac{1}{x}\right)^{2x}$ is equal to

(A) e^{-2} (B) e (C) 1 (D) e^2

Options :
1. ✖ A
2. ✖ B
3. ✖ C
4. ✔ D

Question Number : 15 Question Type : MCQ

Let $\mathbf{A}=[a_{ij}]$, $1\le i,j\le n$ with $n\ge 3$ and $a_{ij}=i.j$. The rank of $\mathbf{A}$ is:

(A) 0 (B) 1 (C) $n-1$ (D) n

Options :
1. ✖ A
2. ✔ B
3. ✖ C
4. ✖ D

Question Number : 16 Question Type : NAT

A horizontal beam ABC is loaded as shown in the figure below. The distance of the point of contraflexure from end A (in m) is _____.

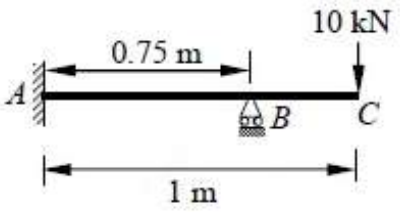

Correct Answer :

0.25

Question Number : 17 Question Type : MCQ

For the plane stress situation shown in the figure, the maximum shear stress and the plane on which it acts are:

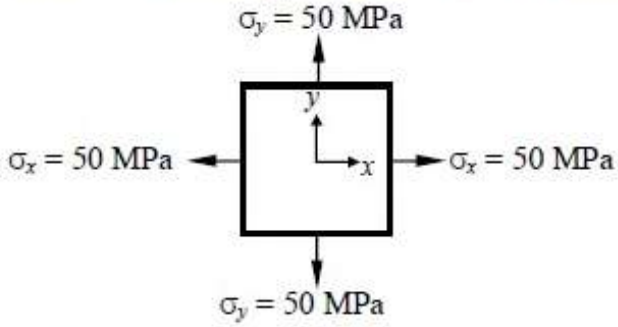

(A) −50 MPa, on a plane 45^0 clockwise *w.r.t.* x-axis
(B) −50 MPa, on a plane 45^0 anti-clockwise *w.r.t.* x-axis
(C) 50 MPa, at all orientations
(D) Zero, at all orientations

Options :

1. ✖ A
2. ✖ B
3. ✖ C
4. ✔ D

Question Number : 18 Question Type : MCQ

A guided support as shown in the figure below is represented by three springs (horizontal, vertical and rotational) with stiffness k_x, k_y and k_θ respectively. The limiting values of k_x, k_y and k_θ are:

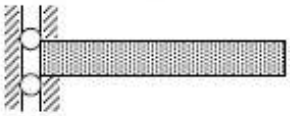

(A) ∞, 0, ∞ (B) ∞, ∞, ∞ (C) 0, ∞, ∞ (D) ∞, ∞, 0

Options :

1. ✔ A
2. ✖ B
3. ✖ C

4. ✖ D

Question Number : 19 Question Type : MCQ

A column of size 450 mm × 600 mm has unsupported length of 3.0 m and is braced against side sway in both directions. According to IS 456: 2000, the minimum eccentricities (in mm) with respect to major and minor principal axes are:

(A) 20.0 and 20.0 (B) 26.0 and 21.0 (C) 26.0 and 20.0 (D) 21.0 and 15.0

Options :

1. ✖ A
2. ✔ B
3. ✖ C
4. ✖ D

Question Number : 20 Question Type : MCQ

Prying forces are:

(A) shearing forces on the bolts because of the joints
(B) tensile forces due to the flexibility of connected parts
(C) bending forces on the bolts because of the joints
(D) forces due the friction between connected parts

Options :

1. ✖ A
2. ✔ B
3. ✖ C
4. ✖ D

Question Number : 21 Question Type : MCQ

A steel member 'M' has reversal of stress due to live loads, whereas another member 'N' has reversal of stress due to wind load. As per IS 800: 2007, the maximum slenderness ratio permitted is:

(A) less for member 'M' than that of member 'N'
(B) more for member 'M' than for member 'N'
(C) same for both the members
(D) not specified in the Code

Options :

1. ✔ A
2. ✖ B
3. ✖ C
4. ✖ D

Question Number : 22 Question Type : MCQ

If the water content of a fully saturated soil mass is 100%, the void ratio of the sample is:

(A) less than specific gravity of soil
(B) equal to specific gravity of soil
(C) greater than specific gravity of soil
(D) independent of specific gravity of soil

Options :

1. ✖ A
2. ✔ B
3. ✖ C
4. ✖ D

Question Number : 23 Question Type : MCQ

In friction circle method of slope stability analysis, if r defines the radius of the slip circle, the radius of friction circle is:

(A) $r \sin\phi$ (B) r (C) $r \cos\phi$ (D) $r \tan\phi$

Options :

1. ✔ A
2. ✖ B
3. ✖ C
4. ✖ D

Question Number : 24 Question Type : MCQ

Net ultimate bearing capacity of a footing embedded in a clay stratum

(A) increases with depth of footing only
(B) increases with size of footing only
(C) increases with depth and size of footing
(D) is independent of depth and size of footing

Options :

1. ✖ A
2. ✖ B
3. ✖ C
4. ✔ D

Question Number : 25 Question Type : MCQ

Surcharge loading required to be placed on the horizontal backfill of a smooth retaining vertical wall so as to completely eliminate tensile crack is:

(A) $2c$ (B) $2c\,k_a$ (C) $2c\sqrt{k_a}$ (D) $2c/\sqrt{k_a}$

Options :

1. ✖ A
2. ✖ B
3. ✖ C
4. ✔ D

Question Number : 26 Question Type : MCQ

The relationship between the length scale ratio (L_r) and the velocity scale ratio (V_r) in hydraulic models, in which Froude dynamic similarity is maintained, is:

(A) $V_r = L_r$ (B) $L_r = \sqrt{V_r}$ (C) $V_r = L_r^{1.5}$ (D) $V_r = \sqrt{L_r}$

Options :

1. ✖ A
2. ✖ B
3. ✖ C
4. ✔ D

Question Number : 27 Question Type : NAT

A nozzle is so shaped that the average flow velocity changes linearly from 1.5 m/s at the beginning to 15 m/s at its end in a distance of 0.375 m. The magnitude of the convective acceleration (in m/s^2) at the end of the nozzle is _____.

Correct Answer:

540

Question Number : 28 Question Type : MCQ

A hydraulic jump takes place in a frictionless rectangular channel. The pre-jump depth is y_p. The alternate and sequent depths corresponding to y_p are y_a and y_s respectively. The correct relationship among y_p , y_a and y_s is:

(A) $y_a < y_s < y_p$ (B) $y_p < y_s < y_a$
(C) $y_p < y_s = y_a$ (D) $y_p = y_s = y_a$

Options :

1. ✖ A
2. ✔ B
3. ✖ C
4. ✖ D

Question Number : 29 Question Type : MCQ

The relationship between porosity (η), specific yield (S_y) and specific retention (S_r) of an unconfined aquifer is:

(A) $S_y + S_r = \eta$ (B) $S_y + \eta = S_r$
(C) $S_r + \eta = S_y$ (D) $S_y + S_r + \eta = 1$

Options :

1. ✔ A
2. ✖ B
3. ✖ C

4. ✖ D

Question Number : 30 Question Type : NAT

A groundwater sample was found to contain 500 mg/L total dissolved solids (TDS). TDS (in %) present in the sample is _____.

Correct Answer :
0.05

Question Number : 31 Question Type : MCQ

SO_2 and CO adversely affect

(A) oxygen carrying capacity of blood and functioning of lungs respectively
(B) functioning of the respiratory system and brain respectively
(C) functioning of the respiratory system and oxygen carrying capacity of blood respectively
(D) functioning of air passages and chest respectively

Options :
1. ✖ A
2. ✖ B
3. ✔ C
4. ✖ D

Question Number : 32 Question Type : MCQ

A superspeedway in New Delhi has among the highest super-elevation rates of any track on the Indian Grand Prix circuit. The track requires drivers to negotiate turns with a radius of 335 m and 33° banking. Given this information, the coefficient of side friction required in order to allow a vehicle to travel at 320 km/h along the curve is:

(A) 1.761 (B) 0.176 (C) 0.253 (D) 2.530

Options :
1. ✔ A
2. ✖ B
3. ✖ C
4. ✖ D

Question Number : 33 Question Type : MCQ

The following statements are made related to the lengths of turning lanes at signalised intersections:

(i) 1.5 times the average number of vehicles (by vehicle type) that would store in turning lane per cycle during the peak hour
(ii) 2 times the average number of vehicles (by vehicle type) that would store in turning lane per cycle during the peak hour
(iii) Average number of vehicles (by vehicle type) that would store in the adjacent through lane per cycle during the peak hour
(iv) Average number of vehicles (by vehicle type) that would store in all lanes per cycle during the peak hour

As per the IRC recommendations, the correct choice for design length of storage lanes is:

(A) Maximum of (ii and iii)
(B) Maximum of (i and iii)
(C) Average of (i and iii)
(D) Only (iv)

Options :

1. ✖ A
2. ✔ B
3. ✖ C
4. ✖ D

Question Number : 34 Question Type : NAT

In a leveling work, sum of the Back Sight (B.S.) and Fore Sight (F.S.) have been found to be 3.085 m and 5.645 m respectively. If the Reduced Level (R.L.) of the starting station is 100.000 m, the R.L. (in m) of the last station is _____.

Correct Answer :

97.44

Question Number : 35 Question Type : MCQ

The combined correction due to curvature and refraction (in m) for a distance of 1 km on the surface of Earth is:

(A) 0.0673
(B) 0.673
(C) 7.63
(D) 0.763

Options :

1. ✔ A
2. ✖ B
3. ✖ C
4. ✖ D

Question Number : 36 Question Type : NAT

The probability density function of a random variable, x is

$$f(x) = \frac{x}{4}\left(4 - x^2\right) \quad \text{for} \quad 0 \le x \le 2$$
$$= 0 \quad \text{otherwise}$$

The mean, μ_x of the random variable is _____.

Correct Answer :

1.06 to 1.07

Question Number : 37 Question Type : NAT

Consider the following second order linear differential equation

$$\frac{d^2y}{dx^2} = -12x^2 + 24x - 20$$

The boundary conditions are: at $x = 0$, $y = 5$ and at $x = 2$, $y = 21$

The value of y at $x = 1$ is _____.

Correct Answer :

18

Question Number : 38 Question Type : MCQ

The two Eigen values of the matrix $\begin{bmatrix} 2 & 1 \\ 1 & p \end{bmatrix}$ have a ratio of 3:1 for $p = 2$. What is another value of p for which the Eigen values have the same ratio of 3:1?

(A) -2 (B) 1 (C) 7/3 (D) 14/3

Options :

1. ✖ A
2. ✖ B
3. ✖ C
4. ✔ D

Question Number : 39 Question Type : NAT

For step-size, $\Delta x = 0.4$, the value of following integral using Simpson's 1/3 rule is _____.

$$\int_0^{0.8} \left(0.2 + 25x - 200x^2 + 675x^3 - 900x^4 + 400x^5\right) dx$$

Correct Answer :

1.36 to 1.37

Question Number : 40 Question Type : MCQ

In a system, two connected rigid bars AC and BC are of identical length, L with pin supports at A and B. The bars are interconnected at C by a frictionless hinge. The rotation of the hinge is restrained by a rotational spring of stiffness, k. The system initially assumes a straight line configuration, ACB. Assuming both the bars as weightless, the rotation at supports, A and B, due to a transverse load, P applied at C is:

(A) $\frac{PL}{4k}$ (B) $\frac{PL}{2k}$ (C) $\frac{P}{4k}$ (D) $\frac{Pk}{4L}$

Options :

1. ✔ A
2. ✖ B
3. ✖ C
4. ✖ D

Question Number : 41 Question Type : NAT

A simply supported reinforced concrete beam of length 10 m sags while undergoing shrinkage. Assuming a uniform curvature of 0.004 m^{-1} along the span, the maximum deflection (in m) of the beam at mid-span is _____.

Correct Answer :

0.05

Question Number : 42 Question Type : NAT

A steel strip of length, $L = 200$ mm is fixed at end A and rests at B on a vertical spring of stiffness, $k = 2$ N/mm. The steel strip is 5 mm wide and 10 mm thick. A vertical load, $P = 50$ N is applied at B, as shown in the figure. Considering $E = 200$ GPa, the force (in N) developed in the spring is _____.

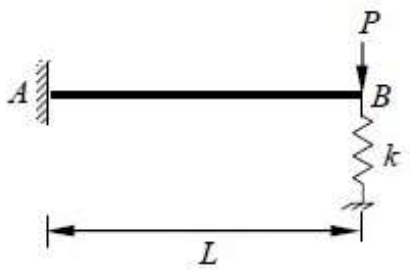

Correct Answer :

3.0 to 3.3

Question Number : 43 Question Type : NAT

A simply supported beam AB of span, L = 24 m is subjected to two wheel loads acting at a distance, d = 5 m apart as shown in the figure below. Each wheel transmits a load, P = 3 kN and may occupy any position along the beam. If the beam is an I-section having section modulus, S = 16.2 cm^3, the maximum bending stress (in GPa) due to the wheel loads is _____.

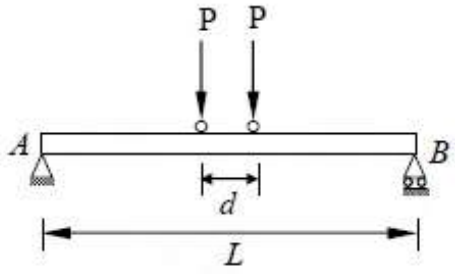

Correct Answer :
1.78 to 1.79

Question Number : 44 Question Type : NAT

According to the concept of Limit State Design as per IS 456: 2000, the probability of failure of a structure is _____.

Correct Answer:
0.09 to 0.10

Question Number : 45 Question Type : MCQ

In a pre-stressed concrete beam section shown in the figure, the net loss is 10% and the final pre-stressing force applied at X is 750 kN. The initial fiber stresses (in N/mm^2) at the top and bottom of the beam were:

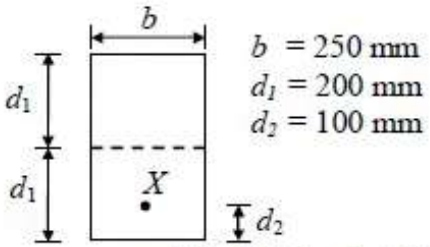

(A) 4.166 and 20.833
(B) −4.166 and −20.833
(C) 4.166 and −20.833
(D) −4.166 and 20.833

Options :
1. ✖ A
2. ✖ B
3. ✖ C
4. ✔ D

Question Number : 46 Question Type : MCQ

A fixed end beam is subjected to a load, W at 1/3rd span from the left support as shown in the figure. The collapse load of the beam is:

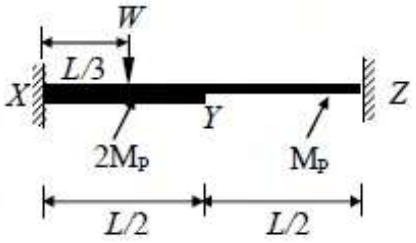

(A) 16.5 M_p/L (B) 15.5 M_p/L (C) 15.0 M_p/L (D) 16.0 M_p/L

Options :

1. ✖ A
2. ✖ B
3. ✔ C
4. ✖ D

Question Number : 47 Question Type : NAT

A 588 cm^3 volume of moist sand weighs 1010 gm. Its dry weight is 918 gm and specific gravity of solids, G is 2.67. Assuming density of water as 1 gm/cm^3, the void ratio is _____.

Correct Answer:

0.70 to 0.72

Question Number : 48 Question Type : NAT

A 4 m thick layer of normally consolidated clay has an average void ratio of 1.30. Its compression index is 0.6 and coefficient of consolidation is 1 m^2/yr. If the increase in vertical pressure due to foundation load on the clay layer is equal to the existing effective overburden pressure, the change in the thickness of the clay layer is _____ mm

Correct Answer :

313.0 to 316.0

Question Number : 49 Question Type : NAT

A pile of diameter 0.4 m is fully embedded in a clay stratum having 5 layers, each 5 m thick as shown in the figure below. Assume a constant unit weight of soil as 18 kN/m^3 for all the layers. Using λ-method (λ = 0.15 for 25 m embedment length) and neglecting the end bearing component, the ultimate pile capacity (in kN) is _____.

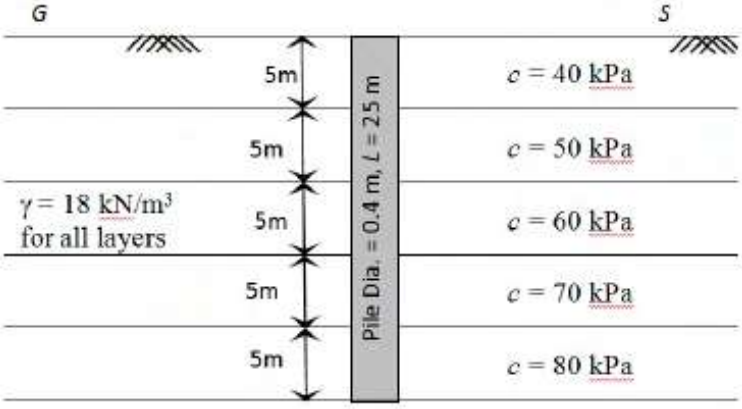

Correct Answer :

1620.0 to 1630.0

Question Number : 50 Question Type : MCQ

Stress path equation for tri-axial test upon application of deviatoric stress is, $q = 10\sqrt{3} + 0.5\,p$. The respective values of cohesion, c (in kPa) and angle of internal friction, ϕ are:

(A) 20 and 20°
(B) 20 and 30°
(C) 30 and 30°
(D) 30 and 20°

Options :

1. ✖ A
2. ✔ B
3. ✖ C
4. ✖ D

Question Number : 51 Question Type : MCQ

A 6 m high retaining wall having a smooth vertical back face retains a layered horizontal backfill. Top 3 m thick layer of the backfill is sand having an angle of internal friction, ϕ = 30° while the bottom layer is 3 m thick clay with cohesion, c = 20 kPa. Assume unit weight for both sand and clay as 18 kN/m^3. The total active earth pressure per unit length of the wall (in kN/m) is:

(A) 150
(B) 216
(C) 156
(D) 196

Options :

1. ✔ A
2. ✖ B
3. ✖ C
4. ✖ D

Question Number : 52 Question Type : NAT

A field channel has cultivable commanded area of 2000 hectares. The intensities of irrigation for gram and wheat are 30% and 50% respectively. Gram has a kor period of 18 days, kor depth of 12 cm, while wheat has a kor period of 18 days and a kor depth of 15 cm. The discharge (in m^3/s) required in the field channel to supply water to the commanded area during the kor period is _____.

Correct Answer:
1.4 to 1.5

Question Number : 53 Question Type : NAT

A triangular gate with a base width of 2 m and a height of 1.5 m lies in a vertical plane. The top vertex of the gate is 1.5 m below the surface of a tank which contains oil of specific gravity 0.8. Considering the density of water and acceleration due to gravity to be 1000 kg/m^3 and 9.81 m/s^2 respectively, the hydrostatic force (in kN) exerted by the oil on the gate is _____.

Correct Answer :
29.3 to 29.5

Question Number : 54 Question Type : MCQ

The velocity components of a two dimensional plane motion of a fluid are: $u = \frac{y^3}{3} + 2x - x^2y$ and $v = xy^2 - 2y - \frac{x^3}{3}$.

The correct statement is:

(A) Fluid is incompressible and flow is irrotational
(B) Fluid is incompressible and flow is rotational
(C) Fluid is compressible and flow is irrotational
(D) Fluid is compressible and flow is rotational

Options :
1. ✔ A
2. ✖ B
3. ✖ C
4. ✖ D

Question Number : 55 Question Type : MCQ

The average surface area of a reservoir in the month of June is 20 km^2. In the same month, the average rate of inflow is 10 m^3/s, outflow rate is 15 m^3/s, monthly rainfall is 10 cm, monthly seepage loss is 1.8 cm and the storage change is 16 million m^3. The evaporation (in cm) in that month is:

(A) 46.8 (B) 136.0 (C) 13.6 (D) 23.4

Options :
1. ✖ A

2. ✖ B

3. ✖ C

4. ✔ D

Question Number : 56 Question Type : NAT

A pipe of 0.7 m diameter has a length of 6 km and connects two reservoirs A and B. The water level in reservoir A is at an elevation 30 m above the water level in reservoir B. Halfway along the pipe line, there is a branch through which water can be supplied to a third reservoir C. The friction factor of the pipe is 0.024. The quantity of water discharged into reservoir C is 0.15 m^3/s. Considering the acceleration due to gravity as 9.81 m/s^2 and neglecting minor losses, the discharge (in m^3/s) into the reservoir B is _____.

Correct Answer :

0.56 to 0.58

Question Number : 57 Question Type : NAT

A landfill is to be designed to serve a population of 200000 for a period of 25 years. The solid waste (SW) generation is 2 kg/person/day. The density of the un-compacted SW is 100 kg/m^3 and a compaction ratio of 4 is suggested. The ratio of compacted fill (i.e., SW + cover) to compacted SW is 1.5. The landfill volume (in million m^3) required is _____.

Correct Answer :

13.6 to 13.8

Question Number : 58 Question Type : NAT

A water treatment plant of capacity, 1 m^3/s has filter boxes of dimensions 6 m × 10 m. Loading rate to the filters is 120 $m^3/day/m^2$. When two of the filters are out of service for back washing, the loading rate (in $m^3/day/m^2$) is _____.

Correct Answer:

144

Question Number : 59 Question Type : MCQ

Ultimate BOD of a river water sample is 20 mg/L. BOD rate constant (natural log) is 0.15 day^{-1}. The respective values of BOD (in %) exerted and remaining after 7 days are:

(A) 45 and 55

(B) 55 and 45

(C) 65 and 35

(D) 75 and 25

Options :

1. ✖ A

2. ✖ B

3. ✔ C

4. ✖ D

Question Number : 60 Question Type : NAT

In a wastewater treatment plant, primary sedimentation tank (PST) designed at an overflow rate of 32.5 $m^3/day/m^2$ is 32.5 m long , 8.0 m wide and liquid depth of 2.25 m. If the length of the weir is 75 m, the weir loading rate (in $m^3/day/m$) is _____.

Correct Answer:

112.0 to 113.0

Question Number : 61 Question Type : NAT

The relation between speed u (in km/h) and density k (number of vehicles / km) for a traffic stream on a road is $u = 70 - 0.7k$. The capacity on this road is _____ vph (vehicles/hour).

Correct Answer:

1750

Question Number : 62 Question Type : MCQ

Match the information related to tests on aggregates given in Group-I with that in Group-II.

Group-I	Group-II
P. Resistance to impact	1. Hardness
Q. Resistance to wear	2. Strength
R. Resistance to weathering action	3. Toughness
S. Resistance to crushing	4. Soundness

(A) P-1, Q-3, R-4, S-2 (B) P-3, Q-1, R-4, S-2

(C) P-4, Q-1, R-3, S-2 (D) P-3, Q-4, R-2, S-1

Options :

1. ✖ A

2. ✔ B

3. ✖ C

4. ✖ D

Question Number : 63 Question Type : MCQ

In Marshall method of mix design, the coarse aggregate, fine aggregate, fines and bitumen having respective values of specific gravity 2.60, 2.70, 2.65 and 1.01, are mixed in the relative proportions (% by weight) of 55.0, 35.8, 3.7 and 5.5 respectively. The theoretical specific gravity of the mix and the effective specific gravity of the aggregates in the mix respectively are:

(A) 2.42 and 2.63 (B) 2.42 and 2.78 (C) 2.42 and 2.93 (D) 2.64 and 2.78

Options :

1. ✔ A
2. ✖ B
3. ✖ C
4. ✖ D

Question Number : 64 Question Type : MCQ

The bearings of two inaccessible stations, S_1 (Easting 500 m, Northing 500 m) and S_2 (Easting 600 m, Northing 450 m) from a station S_3 were observed as 225^0 and $153^0\ 26'$ respectively. The independent Easting (in m) of station S_3 is:

(A) 450.000 (B) 570.710 (C) 550.000 (D) 650.000

Options :

1. ✖ A
2. ✖ B
3. ✔ C
4. ✖ D

Question Number : 65 Question Type : NAT

Two Pegs A and B were fixed on opposite banks of a 50 m wide river. The level was set up at A and the staff readings on Pegs A and B were observed as 1.350 m and 1.550 m, respectively. Thereafter the instrument was shifted and set up at B. The staff readings on Pegs B and A were observed as 0.750 m and 0.550 m, respectively. If the R.L. of Peg A is 100.200 m, the R.L. (in m) of Peg B is _____.

Correct Answer:

100