Graduate Aptitude Test in Engineering 2017

Question Paper Name: Civil Engineering 12th feb 2017 session 2
Subject Name: Civil Engineering
Duration: 180
Total Marks: 100

Organizing Institute:
Indian Institute of Technology Roorkee

Question Number : 1 **Correct : 1 Wrong : -0.33**

Consider the following simultaneous equations (with c_1 and c_2 being constants):

$3x_1 + 2x_2 = c_1$
$4x_1 + x_2 = c_2$

The characteristic equation for these simultaneous equations is

(A) $\lambda^2 - 4\lambda - 5 = 0$
(B) $\lambda^2 - 4\lambda + 5 = 0$
(C) $\lambda^2 + 4\lambda - 5 = 0$
(D) $\lambda^2 + 4\lambda + 5 = 0$

Question Number : 2 **Correct : 1 Wrong : -0.33**

Let $w = f(x, y)$, where x and y are functions of t. Then, according to the chain rule, $\frac{dw}{dt}$ is equal to

(A) $\frac{dw}{dx}\frac{dx}{dt} + \frac{dw}{dy}\frac{dt}{dt}$

(B) $\frac{\partial w}{\partial x}\frac{\partial x}{\partial t} + \frac{\partial w}{\partial y}\frac{\partial y}{\partial t}$

(C) $\frac{\partial w}{\partial x}\frac{dx}{dt} + \frac{\partial w}{\partial y}\frac{dy}{dt}$

(D) $\frac{dw}{dx}\frac{\partial x}{\partial t} + \frac{dw}{dy}\frac{\partial y}{\partial t}$

Question Number : 3 **Correct : 1 Wrong : -0.33**

Given that the scope of the construction work is well-defined with all its drawings, specifications, quantities and estimates, which one of the following types of contract would be most preferred?

(A) EPC contract
(B) Percentage rate contract
(C) Item rate contract
(D) Lump sum contract

Question Number : 4 **Correct : 1 Wrong : -0.33**

Let G be the specific gravity of soil solids, w the water content in the soil sample, γ_w the unit weight of water, and γ_d the dry unit weight of the soil. The equation for the zero air voids line in a compaction test plot is

(A) $\gamma_d = \dfrac{G\gamma_w}{1+Gw}$ (B) $\gamma_d = \dfrac{G\gamma_w}{Gw}$ (C) $\gamma_d = \dfrac{Gw}{1+\gamma_w}$ (D) $\gamma_d = \dfrac{Gw}{1-\gamma_w}$

Question Number : 5 **Correct : 1 Wrong : -0.33**

Consider the following statements related to the pore pressure parameters, A and B:

P. A always lies between 0 and 1.0
Q. A can be less than 0 or greater than 1.0
R. B always lies between 0 and 1.0
S. B can be less than 0 or greater than 1.0

For these statements, which one of the following options is correct?

(A) P and R (B) P and S (C) Q and R (D) Q and S

Question Number : 6 **Correct : 1 Wrong : -0.33**

Consider a rigid retaining wall with partially submerged cohesionless backfill with a surcharge. Which one of the following diagrams closely represents the Rankine's active earth pressure distribution against this wall?

(A)
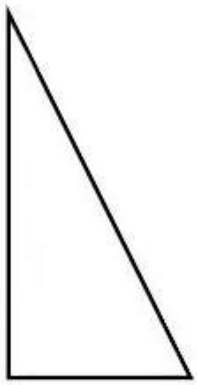

(B)
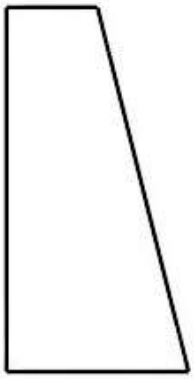

(C)
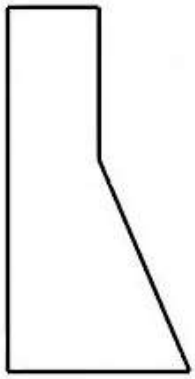

(D)
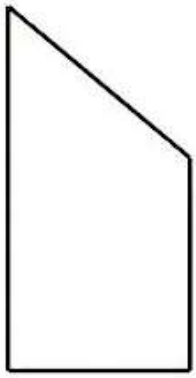

Question Number : 7 **Correct : 1 Wrong : -0.33**

If a centrifugal pump has an impeller speed of N (in rpm), discharge Q (in m^3/s) and the total head H (in m), the expression for the specific speed N_s of the pump is given by

(A) $N_s = \frac{NQ^{0.5}}{H^{0.5}}$ (B) $N_s = \frac{NQ^{0.5}}{H}$ (C) $N_s = \frac{NQ^{0.5}}{H^{0.75}}$ (D) $N_s = \frac{NQ}{H^{0.75}}$

Question Number : 8 **Correct : 1 Wrong : -0.33**

As per Noise Pollution (Regulation and Control) Rules 2000 of India, the day time noise limit for a residential zone, expressed in dB(A) L_{eq}, is

(A) 55 (B) 65

(C) 75 (D) 85

Question Number : 9 **Correct : 1 Wrong : -0.33**

Following observations have been made for the elevation and temperature to ascertain the stability of the atmosphere:

Elevation (in m)	Temperature (in °C)
10	15.5
60	15.0
130	14.3

The atmosphere is classified as

(A) Stable (B) Unstable (C) Neutral (D) Inverse

Question Number : 10 **Correct : 1 Wrong : -0.33**

The most important type of species involved in the degradation of organic matter in the case of activated sludge process is

(A) autotrophs
(B) heterotrophs
(C) prototrophs
(D) photo-autotrophs

Question Number : 11 **Correct : 1 Wrong : -0.33**

For a broad gauge railway track on a horizontal curve of radius R (in m), the equilibrium cant e required for a train moving at a speed of V (in km per hour) is

(A) $e = 1.676\dfrac{V^2}{R}$

(B) $e = 1.315\dfrac{V^2}{R}$

(C) $e = 0.80\dfrac{V^2}{R}$

(D) $e = 0.60\dfrac{V^2}{R}$

Question Number : 12 **Correct : 1 Wrong : -0.33**

The safety within a roundabout and the efficiency of a roundabout can be increased, respectively, by

(A) increasing the entry radius and increasing the exit radius
(B) increasing the entry radius and decreasing the exit radius
(C) decreasing the entry radius and increasing the exit radius
(D) decreasing the entry radius and decreasing the exit radius

Question Number : 13 **Correct : 1 Wrong : -0.33**

The method of orientation used, when the plane table occupies a position not yet located on the map, is called as

(A) traversing (B) radiation

(C) levelling (D) resection

Question Number : 14 **Correct : 1 Wrong : -0.33**

Consider the frame shown in the figure:

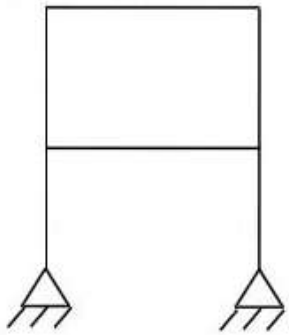

If the axial and shear deformations in different members of the frame are assumed to be negligible, the reduction in the degree of kinematical indeterminacy would be equal to

(A) 5

(B) 6

(C) 7

(D) 8

Question Number : 15 **Correct : 1 Wrong : -0.33**

Let the characteristic strength be defined as that value, below which not more than 50% of the results are expected to fall. Assuming a standard deviation of 4 MPa, the target mean strength (in MPa) to be considered in the mix design of a M25 concrete would be

(A) 18.42

(B) 21.00

(C) 25.00

(D) 31.58

Question Number : 16 Correct : 1 Wrong : -0.33

In a material under a state of plane strain, a 10×10 mm square centered at a point gets deformed as shown in the figure.

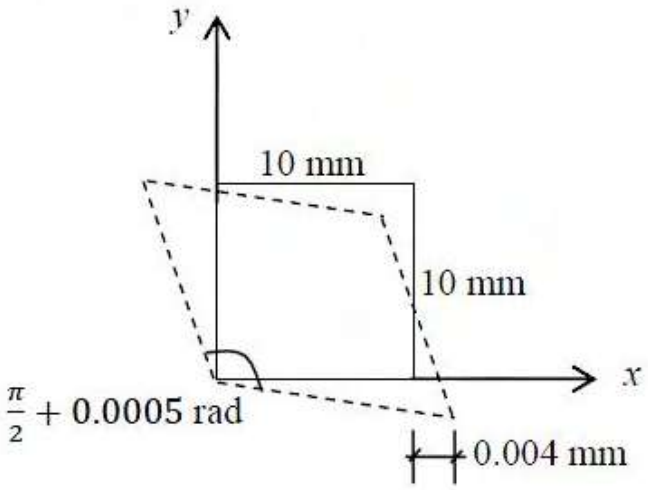

If the shear strain γ_{xy} at this point is expressed as $0.001k$ (in rad), the value of k is

(A) 0.50

(B) 0.25

(C) −0.25

(D) −0.50

Question Number : 17 Correct : 1 Wrong : -0.33

The plate load test was conducted on a clayey strata by using a plate of 0.3 m × 0.3 m dimensions, and the ultimate load per unit area for the plate was found to be 180 kPa. The ultimate bearing capacity (in kPa) of a 2 m wide square footing would be

(A) 27

(B) 180

(C) 1200

(D) 2000

Question Number : 18 Correct : 1 Wrong : 0

For a construction project, the mean and standard deviation of the completion time are 200 days and 6.1 days, respectively. Assume normal distribution and use the value of standard normal deviate z = 1.64 for the 95% confidence level. The maximum time required (in days) for the completion of the project would be _____

Question Number : 19 **Correct : 1 Wrong : 0**

The divergence of the vector field $\boldsymbol{V} = x^2\,\boldsymbol{i} + 2\,y^3\,\boldsymbol{j} + z^4\,\boldsymbol{k}$ at $x = 1$, $y = 2$, $z = 3$ is _____

Question Number : 20 **Correct : 1 Wrong : 0**

A two-faced fair coin has its faces designated as head (H) and tail (T). This coin is tossed three times in succession to record the following outcomes: H, H, H. If the coin is tossed one more time, the probability (up to one decimal place) of obtaining H again, given the previous realizations of H, H and H, would be _____

Question Number : 21 **Correct : 1 Wrong : 0**

A sheet pile has an embedment depth of 12 m in a homogeneous soil stratum. The coefficient of permeability of soil is 10^{-6} m/s. Difference in the water levels between the two sides of the sheet pile is 4 m. The flow net is constructed with five number of flow lines and eleven number of equipotential lines. The quantity of seepage (in cm^3/s per m, up to one decimal place) under the sheet pile is _____

Question Number : 22 **Correct : 1 Wrong : 0**

The VPI (vertical point of intersection) is 100 m away (when measured along the horizontal) from the VPC (vertical point of curvature). If the vertical curve is parabolic, the length of the curve (in meters and measured along the horizontal) is _____

Question Number : 23 **Correct : 1 Wrong : 0**

During a storm event in a certain period, the rainfall intensity is 3.5 cm/hour and the Φ-index is 1.5 cm/hour. The intensity of effective rainfall (in cm/hour, up to one decimal place) for this period is _____

Question Number : 24 **Correct : 1 Wrong : 0**

The infiltration capacity of a soil follows the Horton's exponential model, $f = c_1 + c_2 e^{-kt}$. During an experiment, the initial infiltration capacity was observed to be 200 mm/h. After a long time, the infiltration capacity was reduced to 25 mm/h. If the infiltration capacity after 1 hour was 90 mm/h, the value of the decay rate constant, k (in h^{-1}, up to two decimal places) is _____

Question Number : 25 **Correct : 1 Wrong : 0**

While aligning a hill road with a ruling gradient of 6%, a horizontal curve of radius 50 m is encountered. The grade compensation (in percentage, up to two decimal places) to be provided for this case would be _____

Question Number : 26 **Correct : 2 Wrong : -0.66**

The tangent to the curve represented by $y = x \ln x$ is required to have 45° inclination with the x-axis. The coordinates of the tangent point would be

(A) (1,0) (B) (0,1) (C) (1,1) (D) ($\sqrt{2}$,$\sqrt{2}$)

Question Number : 27 **Correct : 2 Wrong : -0.66**

Consider the following definite integral:

$$I = \int_0^1 \frac{(\sin^{-1} x)^2}{\sqrt{1-x^2}} dx$$

The value of the integral is

(A) $\frac{\pi^3}{24}$ (B) $\frac{\pi^3}{12}$ (C) $\frac{\pi^3}{48}$ (D) $\frac{\pi^3}{64}$

Question Number : 28 **Correct : 2 Wrong : -0.66**

If $\mathbf{A} = \begin{bmatrix} 1 & 5 \\ 6 & 2 \end{bmatrix}$ and $\mathbf{B} = \begin{bmatrix} 3 & 7 \\ 8 & 4 \end{bmatrix}$, $\mathbf{AB}^T$ is equal to

(A) $\begin{bmatrix} 38 & 28 \\ 32 & 56 \end{bmatrix}$ (B) $\begin{bmatrix} 3 & 40 \\ 42 & 8 \end{bmatrix}$

(C) $\begin{bmatrix} 43 & 27 \\ 34 & 50 \end{bmatrix}$ (D) $\begin{bmatrix} 38 & 32 \\ 28 & 56 \end{bmatrix}$

Question Number : 29 **Correct : 2 Wrong : -0.66**

Consider the following second-order differential equation:

$$y'' - 4y' + 3y = 2t - 3t^2$$

The particular solution of the differential equation is

(A) $-2 - 2t - t^2$ (B) $-2t - t^2$ (C) $2t - 3t^2$ (D) $-2 - 2t - 3t^2$

Question Number : 30 Correct : 2 Wrong : -0.66

Group I gives a list of test methods and test apparatus for evaluating some of the properties of Ordinary Portland Cement (OPC) and concrete. Group II gives the list of these properties.

Group I	Group II
P. Le Chatelier test	1. Soundness of OPC
Q. Vee-Bee test	2. Consistency and setting time of OPC
R. Blaine air permeability test	3. Consistency or workability of concrete
S. The Vicat apparatus	4. Fineness of OPC

The correct match of the items in Group I with the items in Group II is

(A) P-1, Q-3, R-4, S-2

(B) P-2, Q-3, R-1, S-4

(C) P-4, Q-2, R-4, S-1

(D) P-1, Q-4, R-2, S-3

Question Number : 31 Correct : 2 Wrong : -0.66

Two prismatic beams having the same flexural rigidity of 1000 kN-m^2 are shown in the figures.

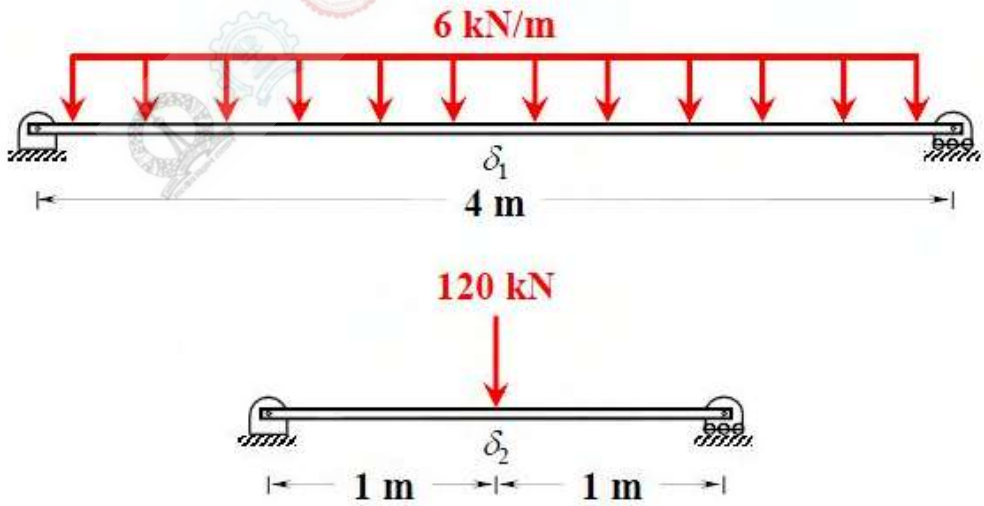

If the mid-span deflections of these beams are denoted by δ_1 and δ_2 (as indicated in the figures), the correct option is

(A) $\delta_1 = \delta_2$

(B) $\delta_1 < \delta_2$

(C) $\delta_1 > \delta_2$

(D) $\delta_1 >> \delta_2$

Question Number : 32 Correct : 2 Wrong : -0.66

Consider the three prismatic beams with the clamped supports P, Q, and R as shown in the figures.

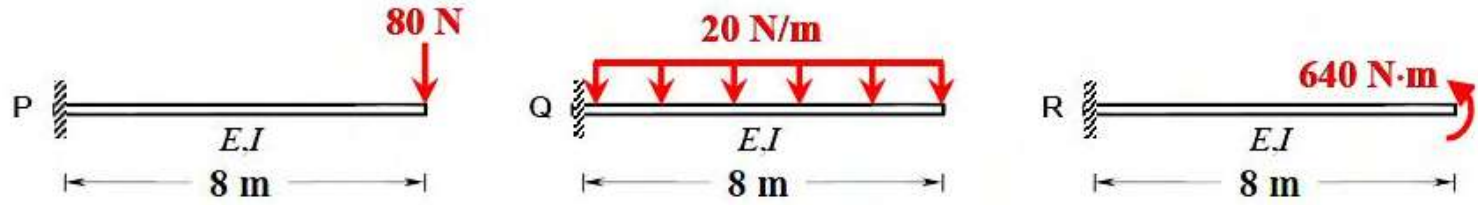

Given that the modulus of elasticity, E is 2.5×10^4 MPa; and the moment of inertia, I is 8×10^8 mm^4, the correct comparison of the magnitudes of the shear force S and the bending moment M developed at the supports is

(A) $S_P < S_Q < S_R;\quad M_P = M_Q = M_R$

(B) $S_P = S_Q > S_R;\quad M_P = M_Q > M_R$

(C) $S_P < S_Q > S_R;\quad M_P = M_Q = M_R$

(D) $S_P < S_Q < S_R;\quad M_P < M_Q < M_R$

Question Number : 33 Correct : 2 Wrong : -0.66

Consider the following statements:

P. Walls of one brick thick are measured in square meters.
Q. Walls of one brick thick are measured in cubic meters.
R. No deduction in the brickwork quantity is made for openings in walls up to 0.1 m^2 area.
S. For the measurement of excavation from the borrow pit in a fairly uniform ground, deadmen are left at suitable intervals.

For the above statements, the correct option is

(A) P – False; Q – True; R – False; S – True
(B) P – False; Q – True; R – False; S – False
(C) P – True; Q – False; R – True; S – False
(D) P – True; Q – False; R – True; S – True

Question Number : 34 **Correct : 2 Wrong : -0.66**

Two identical concrete piles having the plan dimensions 50 cm × 50 cm are driven into a homogeneous sandy layer as shown in the figures. Consider the bearing capacity factor N_q for $\phi = 30°$ as 24.

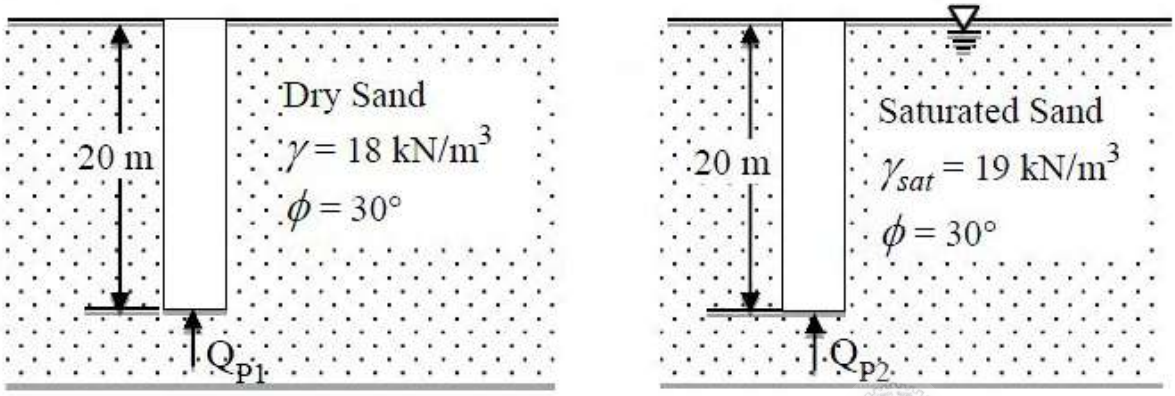

If Q_{P1} and Q_{P2} represent the ultimate point bearing resistances of the piles under dry and submerged conditions, respectively, which one of the following statements is correct?

(A) $Q_{P1} > Q_{P2}$ by about 100%

(B) $Q_{P1} < Q_{P2}$ by about 100%

(C) $Q_{P1} > Q_{P2}$ by about 5%

(D) $Q_{P1} < Q_{P2}$ by about 5%

Question Number : 35 **Correct : 2 Wrong : -0.66**

Following are the statements related to the stress paths in a triaxial testing of soils:

P. If $\sigma_1 = \sigma_3$, the stress point lies at the origin of the p-q plot.
Q. If $\sigma_1 = \sigma_3$, the stress point lies on the p-axis of the p-q plot.
R. If $\sigma_1 > \sigma_3$, both the stress points p and q are positive.

For the above statements, the correct combination is

(A) P – False; Q – True; R – True
(B) P – True; Q – False; R – True
(C) P – False; Q – True; R – False
(D) P – True; Q – False; R – False

Question Number : 36 Correct : 2 Wrong : -0.66

Two cars P and Q are moving in a racing track continuously for two hours. Assume that no other vehicles are using the track during this time. The expressions relating the distance travelled d (in km) and time t (in hour) for both the vehicles are given as

P: $d = 60\,t$
Q: $d = 60\,t^2$

Within the first one hour, the maximum space headway would be

(A) 15 km at 30 minutes
(B) 15 km at 15 minutes
(C) 30 km at 30 minutes
(D) 30 km at 15 minutes

Question Number : 37 Correct : 2 Wrong : -0.66

For the construction of a highway, a cut is to be made as shown in the figure.

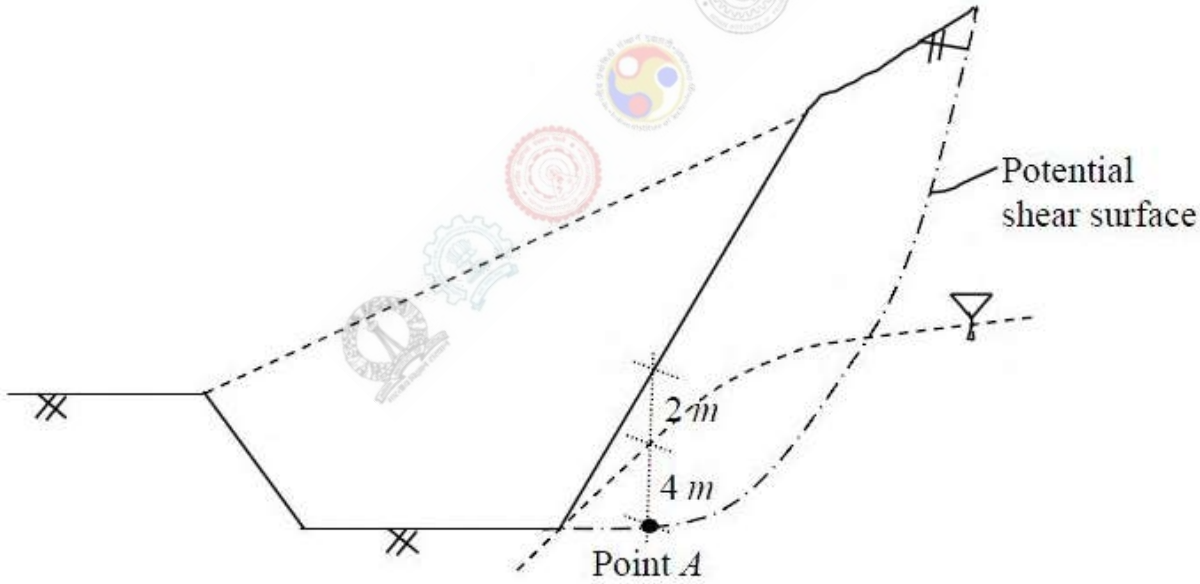

The soil exhibits $c' = 20$ kPa, $\phi' = 18^o$, and the undrained shear strength = 80 kPa. The unit weight of water is 9.81 kN/m^3. The unit weights of the soil above and below the ground water table are 18 and 20 kN/m^3, respectively. If the shear stress at Point A is 50 kPa, the factors of safety against the shear failure at this point, considering the undrained and drained conditions, respectively, would be

(A) 1.6 and 0.9
(B) 0.9 and 1.6
(C) 0.6 and 1.2
(D) 1.2 and 0.6

Question Number : 38 **Correct : 2 Wrong : 0**

Two towers, A and B, standing vertically on a horizontal ground, appear in a vertical aerial photograph as shown in the figure.

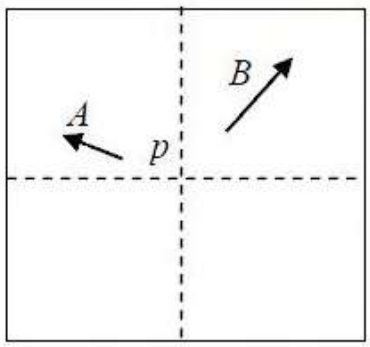

The length of the image of the tower A on the photograph is 1.5 cm and of the tower B is 2.0 cm. The distance of the top of the tower A (as shown by the arrowhead) is 4.0 cm and the distance of the top of the tower B is 6.0 cm, as measured from the principal point p of the photograph. If the height of the tower B is 80 m, the height (in meters) of the tower A is _____

Question Number : 39 **Correct : 2 Wrong : 0**

A hollow circular shaft has an outer diameter of 100 mm and inner diameter of 50 mm. If the allowable shear stress is 125 MPa, the maximum torque (in kN-m) that the shaft can resist is _____

Question Number : 40 **Correct : 2 Wrong : 0**

A simply supported rectangular concrete beam of span 8 m has to be prestressed with a force of 1600 kN. The tendon is of parabolic profile having zero eccentricity at the supports. The beam has to carry an external uniformly distributed load of intensity 30 kN/m. Neglecting the self-weight of the beam, the maximum dip (in meters, up to two decimal places) of the tendon at the mid-span to balance the external load should be _____

Question Number : 41 Correct : 2 Wrong : 0

Two plates of 8 mm thickness each are connected by a fillet weld of 6 mm thickness as shown in the figure.

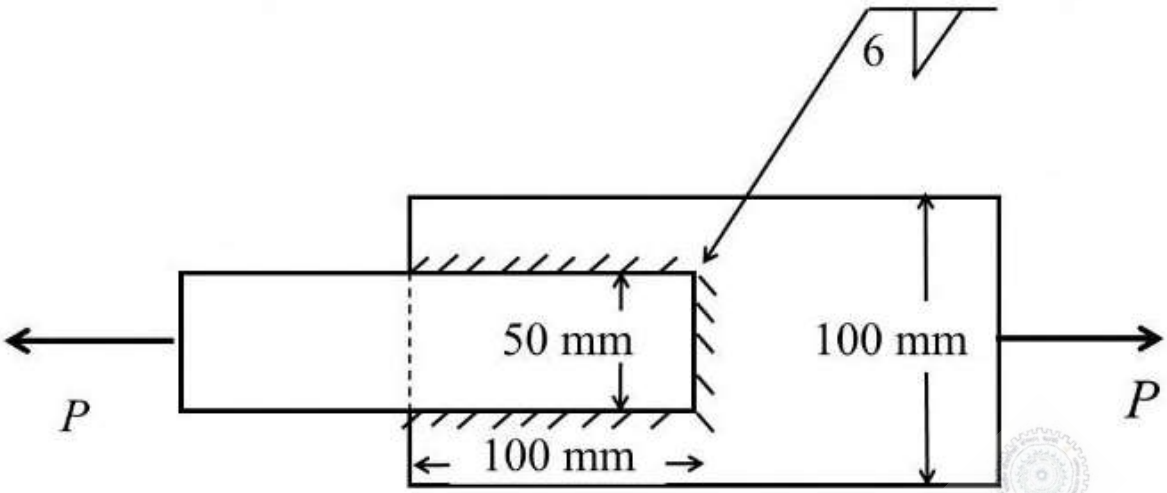

The permissible stresses in the plate and the weld are 150 MPa and 110 MPa, respectively. Assuming the length of the weld shown in the figure to be the effective length, the permissible load P (in kN) is _____

Question Number : 42 Correct : 2 Wrong : 0

Consider the portal frame shown in the figure and assume the modulus of elasticity, $E = 2.5\times10^4$ MPa and the moment of inertia, $I = 8\times10^8$ mm^4 for all the members of the frame.

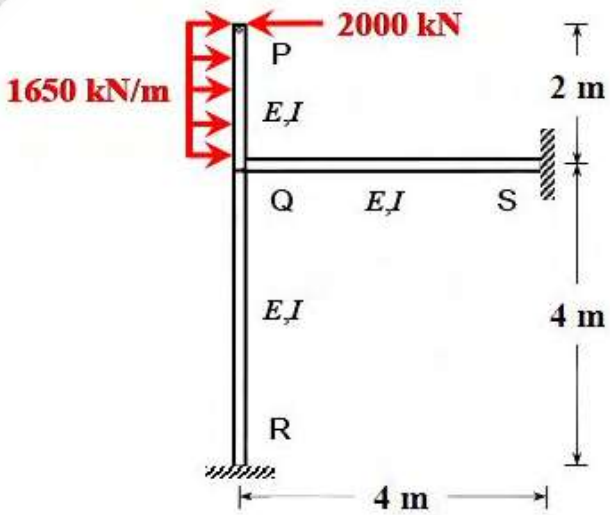

The rotation (in degrees, up to one decimal place) at the rigid joint Q would be _____

Question Number : 43 Correct : 2 Wrong : 0

A 2 m long, axially loaded mild steel rod of 8 mm diameter exhibits the load-displacement (P-δ) behavior as shown in the figure.

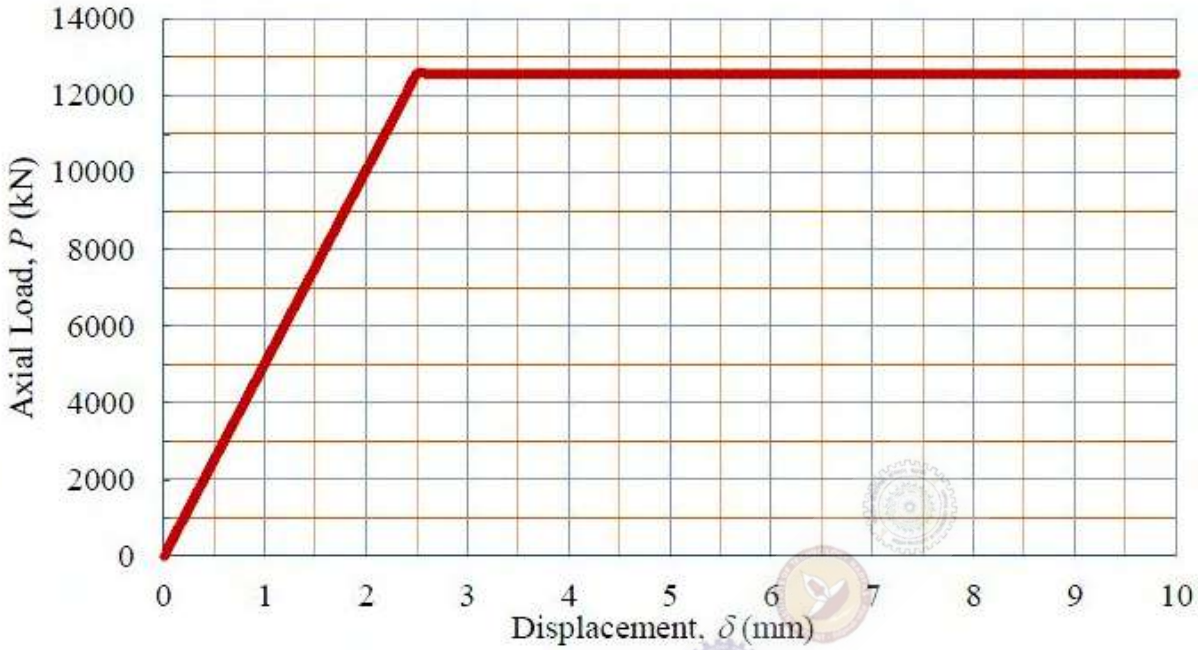

Assume the yield stress of steel as 250 MPa. The complementary strain energy (in N-mm) stored in the bar up to its linear elastic behavior will be _____

Question Number : 44 Correct : 2 Wrong : 0

Consider a square-shaped area ABCD on the ground with its centre at M as shown in the figure. Four concentrated vertical loads of $P = 5000$ kN are applied on this area, one at each corner.

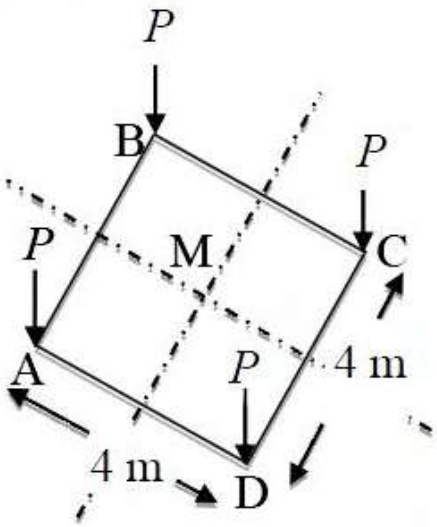

The vertical stress increment (in kPa, up to one decimal place) due to these loads according to the Boussinesq's equation, at a point 5 m right below M, is _____

Question Number : 45 **Correct : 2 Wrong : 0**

The figure shows a U-tube having a 5 mm × 5 mm square cross-section filled with mercury (specific gravity = 13.6) up to a height of 20 cm in each limb (open to the atmosphere).

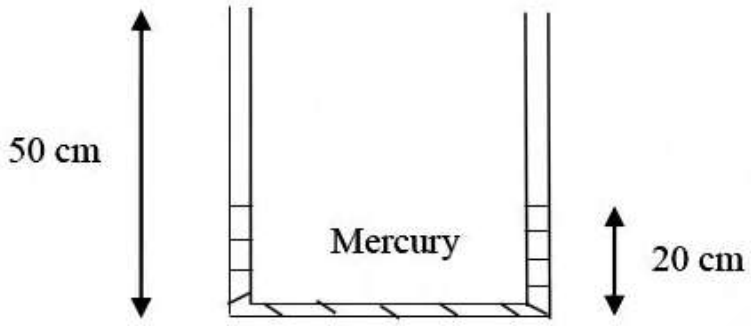

If 5 cm^3 of water is added to the right limb, the new height (in cm, up to two decimal places) of mercury in the LEFT limb will be _____

Question Number : 46 **Correct : 2 Wrong : 0**

A 1 m wide rectangular channel carries a discharge of 2 m^3/s. The specific energy-depth diagram is prepared for the channel. It is observed in this diagram that corresponding to a particular specific energy, the subcritical depth is twice the supercritical depth. The subcritical depth (in meters, up to two decimal places) is equal to _____

Question Number : 47 Correct : 2 Wrong : 0

A catchment is idealized as a 25 km × 25 km square. It has five rain gauges, one at each corner and one at the center, as shown in the figure.

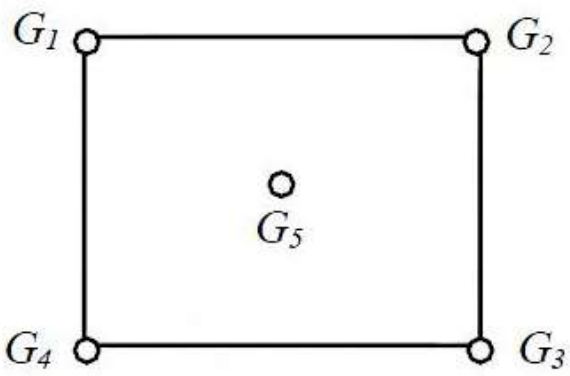

During a month, the precipitation at these gauges is measured as G_1 = 300 mm, G_2 = 285 mm, G_3 = 272 mm, G_4 = 290 mm and G_5 = 288 mm. The average precipitation (in mm, up to one decimal place) over the catchment during this month by using the Thiessen polygon method is _____

Question Number : 48 Correct : 2 Wrong : 0

The culturable command area of a canal is 10,000 ha. The area grows only two crops—rice in the Kharif season and wheat in the Rabi season. The design discharge of the canal is based on the rice requirements, which has an irrigated area of 2500 ha, base period of 150 days and delta of 130 cm. The maximum permissible irrigated area (in ha) for wheat, with a base period of 120 days and delta of 50 cm, is _____

Question Number : 49 Correct : 2 Wrong : 0

Water is pumped at a steady uniform flow rate of 0.01 m^3/s through a horizontal smooth circular pipe of 100 mm diameter. Given that the Reynolds number is 800 and g is 9.81 m/s^2, the head loss (in meters, up to one decimal place) per km length due to friction would be _____

Question Number : 50 Correct : 2 Wrong : 0

The composition of a municipal solid waste sample is given below:

Component	Percent by Mass	Moisture Content (%)	Energy Content (kJ/kg, on as-discarded basis)
Food Waste	20	70	2500
Paper	10	4	10000
Cardboard	10	4	8000
Plastics	10	1	14000
Garden Trimmings	40	60	3500
Wood	5	20	14000
Tin Cans	5	2	100

The difference between the energy content of the waste sample calculated on dry basis and as-discarded basis (in kJ/kg) would be _____

Question Number : 51 Correct : 2 Wrong : 0

For a given water sample, the ratio between $BOD_{5\text{-day, }20°C}$ and the ultimate BOD is 0.68. The value of the reaction rate constant k (on base e) (in day^{-1}, up to two decimal places) is _____

Question Number : 52 Correct : 2 Wrong : 0

A municipal corporation is required to treat 1000 m^3/day of water. It is found that an overflow rate of 20 m/day will produce a satisfactory removal of the discrete suspended particles at a depth of 3 m. The diameter (in meters, rounded to the nearest integer) of a circular settling tank designed for the removal of these particles would be _____

Question Number : 53 **Correct : 2 Wrong : 0**

The analysis of a water sample produces the following results:

Ion	milligram per milli-equivalent for the ion	Concentration (mg/L)
Ca^{2+}	20.0	60
Mg^{2+}	12.2	36.6
Na^{+}	23.0	92
K^{+}	39.1	78.2
Cl^{-}	35.5	71
SO_4^{2-}	48.0	72
HCO_3^{-}	61.0	122

The total hardness (in mg/L as $CaCO_3$) of the water sample is _____

Question Number : 54 **Correct : 2 Wrong : 0**

The radii of relative stiffness of the rigid pavements P and Q are denoted by l_P and l_Q, respectively. The geometric and material properties of the concrete slab and underlying soil are given below:

Pavement	Concrete					Soil
	Length of Slab	Breadth of Slab	Thickness of Slab	Modulus of Elasticity	Poisson's Ratio	Subgrade Reaction Modulus
P	L	B	h	E	μ	K
Q	L	B	$0.5h$	E	μ	$2K$

The ratio (up to one decimal place) of l_P/l_Q is _____

Question Number : 55 **Correct : 2 Wrong : 0**

An observer standing on the deck of a ship just sees the top of a lighthouse. The top of the lighthouse is 40 m above the sea level and the height of the observer's eye is 5 m above the sea level. The distance (in km, up to one decimal place) of the observer from the lighthouse is _____

Question Number : 56 **Correct : 1 Wrong : -0.33**

The event would have been successful if you _____ able to come.

(A) are (B) had been (C) have been (D) would have been

Question Number : 57 **Correct : 1 Wrong : -0.33**

There was no doubt that their work was thorough.

Which of the words below is closest in meaning to the underlined word above?

(A) pretty (B) complete (C) sloppy (D) haphazard

Question Number : 58 **Correct : 1 Wrong : -0.33**

Four cards lie on a table. Each card has a number printed on one side and a colour on the other. The faces visible on the cards are 2, 3, red, and blue.

Proposition: If a card has an even value on one side, then its opposite face is red.

The cards which MUST be turned over to verify the above proposition are

(A) 2, red (B) 2, 3, red (C) 2, blue (D) 2, red, blue

Question Number : 59 **Correct : 1 Wrong : -0.33**

What is the value of x when $81 \times \left(\frac{16}{25}\right)^{x+2} \div \left(\frac{3}{5}\right)^{2x+4} = 144$?

(A) 1 (B) -1 (C) -2 (D) Cannot be determined

Question Number : 60 **Correct : 1 Wrong : -0.33**

Two dice are thrown simultaneously. The probability that the product of the numbers appearing on the top faces of the dice is a perfect square is

(A) 1/9 (B) 2/9 (C) 1/3 (D) 4/9

Question Number : 61 **Correct : 2 Wrong : -0.66**

Bhaichung was observing the pattern of people entering and leaving a car service centre. There was a single window where customers were being served. He saw that people inevitably came out of the centre in the order that they went in. However, the time they spent inside seemed to vary a lot: some people came out in a matter of minutes while for others it took much longer.

From this, what can one conclude?

(A) The centre operates on a first-come-first-served basis, but with variable service times, depending on specific customer needs.
(B) Customers were served in an arbitrary order, since they took varying amounts of time for service completion in the centre.
(C) Since some people came out within a few minutes of entering the centre, the system is likely to operate on a last-come-first-served basis.
(D) Entering the centre early ensured that one would have shorter service times and most people attempted to do this.

Question Number : 62 **Correct : 2 Wrong : -0.66**

A map shows the elevations of Darjeeling, Gangtok, Kalimpong, Pelling, and Siliguri. Kalimpong is at a lower elevation than Gangtok. Pelling is at a lower elevation than Gangtok. Pelling is at a higher elevation than Siliguri. Darjeeling is at a higher elevation than Gangtok.

Which of the following statements can be inferred from the paragraph above?

i. Pelling is at a higher elevation than Kalimpong
ii. Kalimpong is at a lower elevation than Darjeeling
iii. Kalimpong is at a higher elevation than Siliguri
iv. Siliguri is at a lower elevation than Gangtok

(A) Only ii (B) Only ii and iii (C) Only ii and iv (D) Only iii and iv

Question Number : 63 **Correct : 2 Wrong : -0.66**

P, Q, R, S, T and U are seated around a circular table. R is seated two places to the right of Q. P is seated three places to the left of R. S is seated opposite U. If P and U now switch seats, which of the following must necessarily be true?

(A) P is immediately to the right of R
(B) T is immediately to the left of P
(C) T is immediately to the left of P or P is immediately to the right of Q
(D) U is immediately to the right of R or P is immediately to the left of T

Question Number : 64 **Correct : 2 Wrong : -0.66**

Budhan covers a distance of 19 km in 2 hours by cycling one fourth of the time and walking the rest. The next day he cycles (at the same speed as before) for half the time and walks the rest (at the same speed as before) and covers 26 km in 2 hours. The speed in km/h at which Budhan walks is

(A) 1 (B) 4 (C) 5 (D) 6

Question Number : 65 **Correct : 2 Wrong : -0.66**

The points in the graph below represent the halts of a lift for durations of 1 minute, over a period of 1 hour.

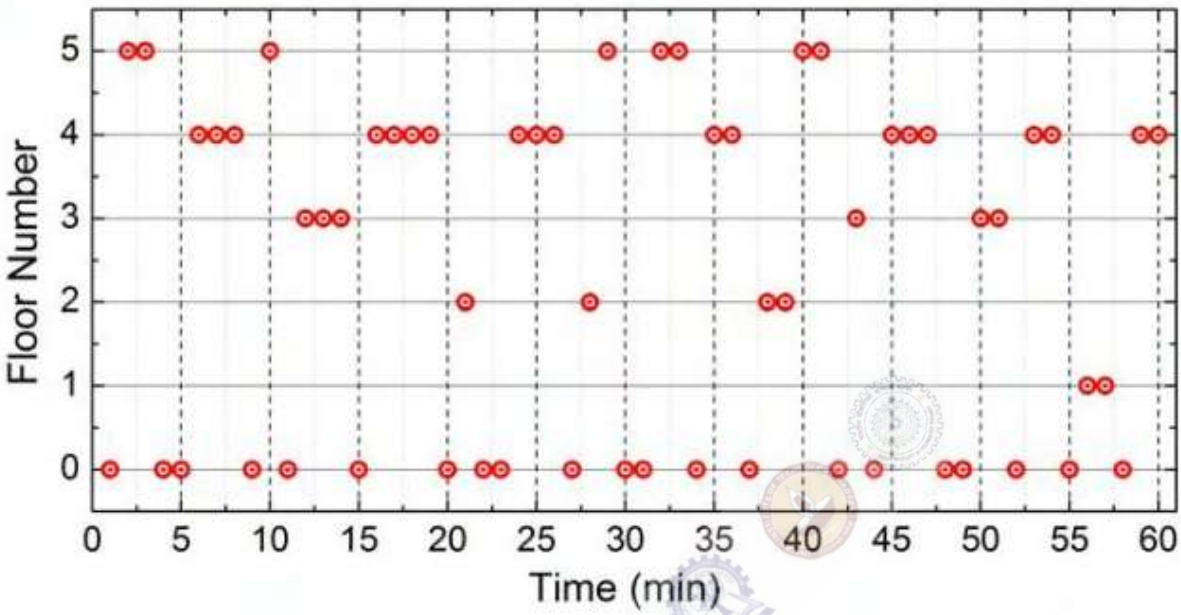

Which of the following statements are correct?

i. The elevator never moves directly from any non-ground floor to another non-ground floor over the one hour period

ii. The elevator stays on the fourth floor for the longest duration over the one hour period

(A)) Only i (B) Only ii (C) Both i and ii (D) Neither i nor ii

Q. No.	Type	Section	Key	Marks
1	MCQ	CE-2	A	1
2	MCQ	CE-2	C	1
3	MCQ	CE-2	D	1
4	MCQ	CE-2	A	1
5	MCQ	CE-2	C	1
6	MCQ	CE-2	Mark to all	1
7	MCQ	CE-2	C	1
8	MCQ	CE-2	A	1
9	MCQ	CE-2	B	1
10	MCQ	CE-2	B	1
11	MCQ	CE-2	B	1
12	MCQ	CE-2	C	1
13	MCQ	CE-2	D	1
14	MCQ	CE-2	B	1
15	MCQ	CE-2	C	1
16	MCQ	CE-2	A or D	1
17	MCQ	CE-2	B	1
18	NAT	CE-2	209 to 219	1
19	NAT	CE-2	133.9 to 134.1	1
20	NAT	CE-2	0.5 to 0.5	1
21	NAT	CE-2	1.6 to 1.6	1
22	NAT	CE-2	199.99 to 200.01	1
23	NAT	CE-2	1.9 to 2.1	1
24	NAT	CE-2	0.98 to 1.00	1
25	NAT	CE-2	1.49 to 1.51	1
26	MCQ	CE-2	A	2
27	MCQ	CE-2	A	2
28	MCQ	CE-2	A	2
29	MCQ	CE-2	A	2
30	MCQ	CE-2	A	2
31	MCQ	CE-2	A	2
32	MCQ	CE-2	C	2
33	MCQ	CE-2	D	2
34	MCQ	CE-2	A	2
35	MCQ	CE-2	A	2
36	MCQ	CE-2	A	2

37	MCQ	CE-2	A	2
38	NAT	CE-2	89 to 91	2
39	NAT	CE-2	20 to 25	2
40	NAT	CE-2	0.14 to 0.16	2
41	NAT	CE-2	59 to 61	2
42	NAT	CE-2	0.9 to 1.1	2
43	NAT	CE-2	Mark to all	2
44	NAT	CE-2	187.0 to 192.0	2
45	NAT	CE-2	20.70 to 20.76	2
46	NAT	CE-2	1.06 to 1.08	2
47	NAT	CE-2	286.9 to 287.9	2
48	NAT	CE-2	5150 to 5250	2
49	NAT	CE-2	65.0 to 69.0	2
50	NAT	CE-2	3850 to 3900	2
51	NAT	CE-2	0.22 to 0.24	2
52	NAT	CE-2	8 to 8	2
53	NAT	CE-2	300 to 300	2
54	NAT	CE-2	1.9 to 2.1	2
55	NAT	CE-2	32.5 to 33.5	2
56	MCQ	GA	B	1
57	MCQ	GA	B	1
58	MCQ	GA	C	1
59	MCQ	GA	B	1
60	MCQ	GA	B	1
61	MCQ	GA	A	2
62	MCQ	GA	C	2
63	MCQ	GA	C	2
64	MCQ	GA	D	2
65	MCQ	GA	D	2