2007
CS: Computer Science and Engineering

Duration : Three Hours Maximum Marks :150

Read the following instructions carefully.

1. This question paper contains 85 objective type questions. Q.1 to Q.20 carry **one** mark each and Q.21 to Q.85 carry **two** marks each.
2. Attempt all the questions.
3. Questions must be answered on **O**bjective **R**esponse **S**heet (**ORS**) by darkening the appropriate bubble (marked A, B, C, D) using HB pencil against the question number on the left hand side of the **ORS**. **Each question has only one correct answer.** In case you wish to change an answer, erase the old answer completely.
4. Wrong answers will carry NEGATIVE marks. In Q.1 to Q.20, **0.25** mark will be deducted for each wrong answer. In Q.21 to Q.76, Q.78, Q.80, Q.82 and in Q.84, **0.5** mark will be deducted for each wrong answer. However, there is no negative marking in Q.77, Q.79, Q.81, Q.83 and in Q.85. More than one answer bubbled against a question will be taken as an incorrect response. Unattempted questions will not carry any marks.
5. Write your registration number, your name and name of the examination centre at the specified locations on the right half of the **ORS**.
6. Using HB pencil, darken the appropriate bubble under each digit of your registration number and the letters corresponding to your paper code.
7. Calculator is allowed in the examination hall.
8. Charts, graph sheets or tables are NOT allowed in the examination hall.
9. Rough work can be done on the question paper itself. Additionally blank pages are given at the end of the question paper for rough work.
10. This question paper contains **24** printed pages including pages for rough work. Please check all pages and report, if there is any discrepancy.

Q. 1 – Q. 20 carry one mark each.

Q.1 Consider the following two statements about the function $f(x) = |x|$:

P. $f(x)$ is continuous for all real values of x

Q. $f(x)$ is differentiable for all real values of x

Which of the following is **TRUE**?

(A) P is true and Q is false.
(B) P is false and Q is true.
(C) Both P and Q are true.
(D) Both P and Q are false.

Q.2 Let S be a set of n elements. The number of ordered pairs in the largest and the smallest equivalence relations on S are

(A) n and n (B) n^2 and n (C) n^2 and 0 (D) n and 1

Q.3 What is the maximum number of different Boolean functions involving n Boolean variables?

(A) n^2 (B) 2^n (C) 2^{2^n} (D) 2^{n^2}

Q.4 Let G be the non-planar graph with the minimum possible number of edges. Then G has

(A) 9 edges and 5 vertices
(B) 9 edges and 6 vertices
(C) 10 edges and 5 vertices
(D) 10 edges and 6 vertices

Q.5 Consider the DAG with V = {1,2,3,4,5,6}, shown below.

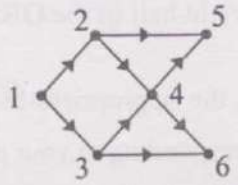

Which of the following is **NOT** a topological ordering?

(A) 1 2 3 4 5 6 (B) 1 3 2 4 5 6
(C) 1 3 2 4 6 5 (D) 3 2 4 1 6 5

Q.6 Which of the following problems is undecidable?

(A) Membership problem for CFGs.
(B) Ambiguity problem for CFGs.
(C) Finiteness problem for FSAs.
(D) Equivalence problem for FSAs.

Q.7 Which of the following is **TRUE**?

(A) Every subset of a regular set is regular.
(B) Every finite subset of a non-regular set is regular.
(C) The union of two non-regular sets is not regular.
(D) Infinite union of finite sets is regular.

Q.8 How many 3-to-8 line decoders with an enable input are needed to construct a 6-to-64 line decoder without using any other logic gates?

(A) 7 (B) 8 (C) 9 (D) 10

Q.9 Consider the following Boolean function of four variables:

$$f(w,x,y,z) = \sum(1,3,4,6,9,11,12,14)$$

The function is

(A) independent of one variable.
(B) independent of two variables.
(C) independent of three variables.
(D) dependent on all the variables.

Q.10 Consider a 4-way set associative cache consisting of 128 lines with a line size of 64 words. The CPU generates a 20-bit address of a word in main memory. The number of bits in the TAG, LINE and WORD fields are respectively:

(A) 9, 6, 5 (B) 7, 7, 6 (C) 7, 5, 8 (D) 9, 5, 6

Q.11 Consider a disk pack with 16 surfaces, 128 tracks per surface and 256 sectors per track. 512 bytes of data are stored in a bit serial manner in a sector. The capacity of the disk pack and the number of bits required to specify a particular sector in the disk are respectively:

(A) 256 Mbyte, 19 bits
(B) 256 Mbyte, 28 bits
(C) 512 Mbyte, 20 bits
(D) 64 Gbyte, 28 bits

Q.12 The height of a binary tree is the maximum number of edges in any root to leaf path. The maximum number of nodes in a binary tree of height h is:

(A) $2^h - 1$ (B) $2^{h-1} - 1$ (C) $2^{h+1} - 1$ (D) 2^{h+1}

Q.13 The maximum number of binary trees that can be formed with three unlabeled nodes is:

(A) 1 (B) 5 (C) 4 (D) 3

Q.14 Which of the following sorting algorithms has the lowest worst-case complexity?

(A) Merge sort
(B) Bubble sort
(C) Quick sort
(D) Selection sort

Q.15 Consider the following segment of C-code:

```
int j, n;
  j = 1;
  while (j <= n)
      j = j*2;
```

The number of comparisons made in the execution of the loop for any $n > 0$ is:

(A) $\lceil \log_2 n \rceil + 1$ (B) n (C) $\lceil \log_2 n \rceil$ (D) $\lfloor \log_2 n \rfloor + 1$

Q.16 Group 1 contains some CPU scheduling algorithms and Group 2 contains some applications. Match entries in Group 1 to entries in Group 2.

Group 1	Group 2
P. Gang Scheduling	1. Guaranteed Scheduling
Q. Rate Monotonic Scheduling	2. Real-time Scheduling
R. Fair Share Scheduling	3. Thread Scheduling

(A) P-3; Q-2; R-1 (B) P-1; Q-2; R-3
(C) P-2; Q-3; R-1 (D) P-1; Q-3; R-2

Q.17 Consider the following statements about user level threads and kernel level threads. Which one of the following statements is **FALSE**?

(A) Context switch time is longer for kernel level threads than for user level threads.
(B) User level threads do not need any hardware support.
(C) Related kernel level threads can be scheduled on different processors in a multi-processor system.
(D) Blocking one kernel level thread blocks all related threads.

Q.18 Which one of the following is a top-down parser?

(A) Recursive descent parser.
(B) Operator precedence parser.
(C) An LR(k) parser.
(D) An LALR(k) parser.

Q.19 In Ethernet when Manchester encoding is used, the bit rate is:

(A) Half the baud rate.
(B) Twice the baud rate.
(C) Same as the baud rate.
(D) None of the above.

Q.20 Which one of the following uses UDP as the transport protocol?

(A) HTTP (B) Telnet (C) DNS (D) SMTP

Q. 21 to Q. 75 carry two marks each.

Q.21 How many different non-isomorphic Abelian groups of order 4 are there?

(A) 2 (B) 3 (C) 4 (D) 5

Q.22 Let *Graph(x)* be a predicate which denotes that x is a graph. Let *Connected(x)* be a predicate which denotes that x is connected. Which of the following first order logic sentences **DOES NOT** represent the statement: "*Not every graph is connected*"?

(A) $\neg\forall x\,(Graph(x) \Rightarrow Connected(x))$
(B) $\exists x\,(Graph(x) \wedge \neg Connected(x))$
(C) $\neg\forall x\,(\neg Graph(x) \vee Connected(x))$
(D) $\forall x\,(Graph(x) \Rightarrow \neg Connected(x))$

Q.23 Which of the following graphs has an Eulerian circuit?

(A) Any k-regular graph where k is an even number.
(B) A complete graph on 90 vertices.
(C) The complement of a cycle on 25 vertices.
(D) None of the above.

Q.24 Suppose we uniformly and randomly select a permutation from the $20!$ permutations of $1,2,3,\ldots,20$. What is the probability that 2 appears at an earlier position than any other even number in the selected permutation?

(A) $\frac{1}{2}$
(B) $\frac{1}{10}$
(C) $\frac{9!}{20!}$
(D) None of the above.

Q.25 Let A be a 4×4 matrix with eigenvalues $-5,-2,1,4$. Which of the following is an eigenvalue of $\begin{bmatrix} A & I \\ I & A \end{bmatrix}$, where I is the 4×4 identity matrix?

(A) -5 (B) -7 (C) 2 (D) 1

Q.26 · Consider the set $S = \{a,b,c,d\}$. Consider the following 4 partitions $\pi_1, \pi_2, \pi_3, \pi_4$ on S: $\pi_1 = \{\overline{abcd}\}, \pi_2 = \{\overline{ab}, \overline{cd}\}, \pi_3 = \{\overline{abc}, \overline{d}\}, \pi_4 = \{\overline{a}, \overline{b}, \overline{c}, \overline{d}\}$. Let $\prec$ be the partial order on the set of partitions $S' = \{\pi_1, \pi_2, \pi_3, \pi_4\}$ defined as follows: $\pi_i \prec \pi_j$ if and only if π_i refines π_j. The poset digram for $(S', \prec)$ is

(A)

(B)

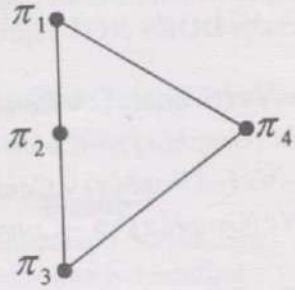

(C)

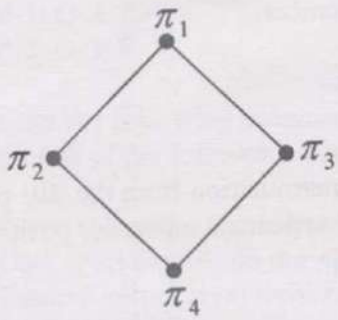

(D)

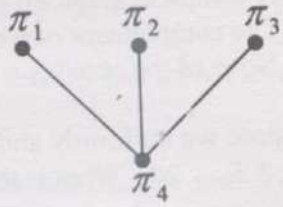

Q.27 Consider the set of (column) vectors defined by $X = \{x \in R^3 \mid x_1 + x_2 + x_3 = 0$, where $x^T = [x_1, x_2, x_3]^T\}$. Which of the following is **TRUE**?

(A) $\{[1,-1,0]^T, [1,0,-1]^T\}$ is a basis for the subspace X.
(B) $\{[1,-1,0]^T, [1,0,-1]^T\}$ is a linearly independent set, but it does not span X and therefore is not a basis of X.
(C) X is not a subspace of R^3.
(D) None of the above.

Q.28 Consider the series $x_{n+1} = \frac{x_n}{2} + \frac{9}{8x_n}$, $x_0 = 0.5$ obtained from the Newton-Raphson method. The series converges to

(A) 1.5 (B) $\sqrt{2}$ (C) 1.6 (D) 1.4

Q.29 A minimum state deterministic finite automaton accepting the language $L = \{w \mid w \in \{0,1\}^*$, number of 0s and 1s in w are divisible by 3 and 5, respectively$\}$ has

(A) 15 states (B) 11 states (C) 10 states (D) 9 states

Q.30 The language $L = \{ 0^i 2 1^i \mid i \geq 0 \}$ over the alphabet {0, 1, 2} is

(A) not recursive.
(B) is recursive and is a deterministic CFL.
(C) is a regular language.
(D) is not a deterministic CFL but a CFL.

Q.31 Which of the following languages is regular?

(A) $\{ ww^R \mid w \in \{0,1\}^+ \}$

(B) $\{ ww^R x \mid x, w \in \{0,1\}^+ \}$

(C) $\{ wxw^R \mid x, w \in \{0,1\}^+ \}$

(D) $\{ xww^R \mid x, w \in \{0,1\}^+ \}$

Q.32 Let $f(w,x,y,z) = \sum(0,4,5,7,8,9,13,15)$. Which of the following expressions are **NOT** equivalent to f?

(P) $x'y'z'+w'xy'+wy'z+xz$
(Q) $w'y'z'+wx'y'+xz$
(R) $w'y'z'+wx'y'+xyz+xy'z$
(S) $x'y'z'+wx'y'+w'y$

(A) P only
(B) Q and S
(C) R and S
(D) S only

Q.33 Define the connective * for the Boolean variables X and Y as: $X * Y = XY + X'Y'$. Let $Z = X * Y$. Consider the following expressions P, Q and R.

$P: X = Y * Z \qquad Q: Y = X * Z \qquad R: X * Y * Z = 1$

Which of the following is **TRUE**?

(A) Only P and Q are valid.
(B) Only Q and R are valid.
(C) Only P and R are valid.
(D) All P, Q, R are valid.

Q.34 Suppose only one multiplexer and one inverter are allowed to be used to implement any Boolean function of n variables. What is the minimum size of the multiplexer needed?

(A) 2^n line to 1 line
(B) 2^{n+1} line to 1 line
(C) 2^{n-1} line to 1 line
(D) 2^{n-2} line to 1 line

Q.35 In a look-ahead carry generator, the carry generate function G_i and the carry propagate function P_i for inputs A_i and B_i are given by:

$$P_i = A_i \oplus B_i \text{ and } G_i = A_i B_i$$

The expressions for the sum bit S_i and the carry bit C_{i+1} of the look-ahead carry adder are given by:

$$S_i = P_i \oplus C_i \text{ and } C_{i+1} = G_i + P_i C_i, \text{ where } C_0 \text{ is the input carry.}$$

Consider a two-level logic implementation of the look-ahead carry generator. Assume that all P_i and G_i are available for the carry generator circuit and that the AND and OR gates can have any number of inputs. The number of AND gates and OR gates needed to implement the look-ahead carry generator for a 4-bit adder with S_3, S_2, S_1, S_0 and C_4 as its outputs are respectively:

(A) 6, 3 (B) 10, 4 (C) 6, 4 (D) 10, 5

Q.36 The control signal functions of a 4-bit binary counter are given below (where X is "don't care"):

Clear	Clock	Load	Count	Function
1	X	X	X	Clear to 0
0	X	0	0	No change
0	↑	1	X	Load input
0	↑	0	1	Count next

The counter is connected as follows:

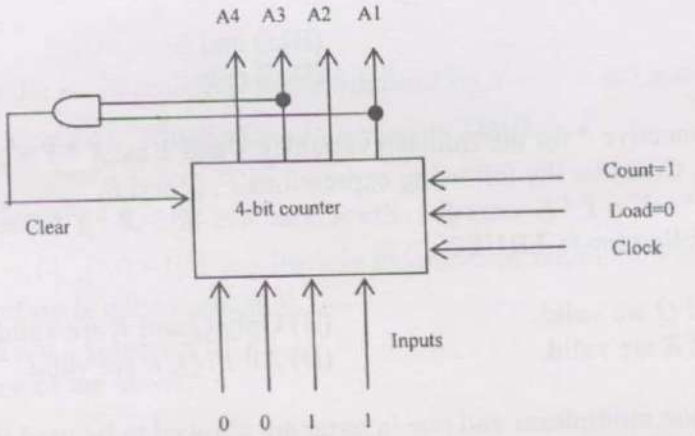

Assume that the counter and gate delays are negligible. If the counter starts at 0, then it cycles through the following sequence:

(A) 0, 3, 4
(B) 0, 3, 4, 5
(C) 0, 1, 2, 3, 4
(D) 0, 1, 2, 3, 4, 5

Q.37 Consider a pipelined processor with the following four stages:

IF: Instruction Fetch
ID: Instruction Decode and Operand Fetch
EX: Execute
WB: Write Back

The IF, ID and WB stages take one clock cycle each to complete the operation. The number of clock cycles for the EX stage depends on the instruction. The ADD and SUB instructions need 1 clock cycle and the MUL instruction needs 3 clock cycles in the EX stage. Operand forwarding is used in the pipelined processor. What is the number of clock cycles taken to complete the following sequence of instructions?

ADD	R2, R1, R0	R2 ← R1 + R0
MUL	R4, R3, R2	R4 ← R3 * R2
SUB	R6, R5, R4	R6 ← R5 – R4

(A) 7 (B) 8 (C) 10 (D) 14

Q.38 The following postfix expression with single digit operands is evaluated using a stack:

8 2 3 ^ / 2 3 * + 5 1 * –

Note that ^ is the exponentiation operator. The top two elements of the stack after the first * is evaluated are:

(A) 6,1 (B) 5,7 (C) 3,2 (D) 1,5

Q.39 The inorder and preorder traversal of a binary tree are

d b e a f c g and a b d e c f g, respectively.

The postorder traversal of the binary tree is

(A) d e b f g c a
(B) e d b g f c a
(C) e d b f g c a
(D) d e f g b c a

Q.40 Consider a hash table of size seven, with starting index zero, and a hash function $(3x+4) \bmod 7$. Assuming the hash table is initially empty, which of the following is the contents of the table when the sequence 1,3,8,10 is inserted into the table using closed hashing? Note that – denotes an empty location in the table.

(A) 8,–,–,–,–,–,10
(B) 1,8,10,–,–,–,3
(C) 1,–,–,–,–,–,3
(D) 1,10,8,–,–,–,3

Q.41 In an unweighted, undirected connected graph, the shortest path from a node S to every other node is computed most efficiently, in terms of *time complexity*, by

(A) Dijkstra's algorithm starting from S.
(B) Warshall's algorithm.
(C) performing a DFS starting from S.
(D) performing a BFS starting from S.

Q.42 Consider the following C function:

```
int f(int n)
{static int r=0;
 if (n <= 0) return 1;
 if (n > 3)
    {r = n;
     return f(n-2)+2;
    }
 return f(n-1)+r;
}
```

What is the value of `f(5)`?

(A) 5 (B) 7 (C) 9 (D) 18

Q.43 A complete n-ary tree is a tree in which each node has n children or no children. Let I be the number of internal nodes and L be the number of leaves in a complete n-ary tree. If $L = 41$, and $I = 10$, what is the value of n?

(A) 3 (B) 4 (C) 5 (D) 6

Q.44 In the following C function, let $n \geq m$.

```
int gcd(n,m)
{
  if(n%m == 0) return m;
  n = n%m;
  return gcd(m,n);
}
```

How many recursive calls are made by this function?

(A) $\Theta(\log_2 n)$ (B) $\Omega(n)$ (C) $\Theta(\log_2 \log_2 n)$ (D) $\Theta(\sqrt{n})$

Q.45 What is the *time complexity* of the following recursive function:

```
int DoSomething (int n){
   if (n <= 2)
      return 1;
   else
      return(DoSomething(floor(sqrt(n))) + n);
}
```

(A) $\Theta(n^2)$ (B) $\Theta(n \log_2 n)$ (C) $\Theta(\log_2 n)$ (D) $\Theta(\log_2 \log_2 n)$

Q.46 Consider the following C program segment where CellNode represents a node in a binary tree:

```
struct CellNode {
  struct CellNode *leftChild;
  int element;
  struct CellNode *rightChild;
};
int GetValue(struct CellNode *ptr) {
 int value = 0;
 if (ptr != NULL) {
    if ((ptr->leftChild == NULL) &&
          (ptr->rightChild == NULL))
       value = 1;
    else
       value = value + GetValue(ptr->leftChild)
                     + GetValue(ptr->rightChild);
 }
return(value);
}
```

The value returned by GetValue when a pointer to the root of a binary tree is passed as its argument is:

(A) the number of nodes in the tree.
(B) the number of internal nodes in the tree.
(C) the number of leaf nodes in the tree.
(D) the height of the tree.

Q.47 Consider the process of inserting an element into a *Max Heap*, where the *Max Heap* is represented by an *array*. Suppose we perform a binary search on the path from the new leaf to the root to find the position for the newly inserted element, the number of *comparisons* performed is:

(A) $\Theta(\log_2 n)$
(B) $\Theta(\log_2 \log_2 n)$
(C) $\Theta(n)$
(D) $\Theta(n \log_2 n)$

Q.48 Which of the following is **TRUE** about formulae in Conjunctive Normal Form?

(A) For any formula, there is a truth assignment for which at least half the clauses evaluate to true.
(B) For any formula, there is a truth assignment for which all the clauses evaluate to true.
(C) There is a formula such that for each truth assignment, at most one-fourth of the clauses evaluate to true.
(D) None of the above.

Q.49 Let w be the minimum weight among all edge weights in an undirected connected graph. Let e be a specific edge of weight w. Which of the following is **FALSE**?

(A) There is a minimum spanning tree containing e.
(B) If e is not in a minimum spanning tree T, then in the cycle formed by adding e to T, all edges have the same weight.
(C) Every minimum spanning tree has an edge of weight w.
(D) e is present in every minimum spanning tree.

Q.50 An array of n numbers is given, where n is an even number. The maximum as well as the minimum of these n numbers needs to be determined. Which of the following is **TRUE** about the number of comparisons needed?

(A) At least $2n-c$ comparisons, for some constant c, are needed.
(B) At most $1.5n-2$ comparisons are needed.
(C) At least $n\log_2 n$ comparisons are needed.
(D) None of the above.

Q.51 Consider the following C code segment:

```
int IsPrime(n)
  {
    int i,n;
    for(i=2;i <= sqrt(n);i++)
      if(n%i == 0)
        {printf("Not Prime\n"); return 0;}
    return 1;
  }
```

Let $T(n)$ denote the number of times the *for* loop is executed by the program on input n. Which of the following is **TRUE**?

(A) $T(n) = O(\sqrt{n})$ and $T(n) = \Omega(\sqrt{n})$
(B) $T(n) = O(\sqrt{n})$ and $T(n) = \Omega(1)$
(C) $T(n) = O(n)$ and $T(n) = \Omega(\sqrt{n})$
(D) None of the above.

Q.52 Consider the grammar with non-terminals $N = \{S, C, S_1\}$, terminals $T = \{a, b, i, t, e\}$, with S as the start symbol, and the following set of rules:

$$S \rightarrow iCtSS_1 \mid a$$
$$S_1 \rightarrow eS \mid \varepsilon$$
$$C \rightarrow b$$

The grammar is **NOT** LL(1) because:

(A) it is left recursive.
(B) it is right recursive.
(C) it is ambiguous.
(D) it is not context-free.

Q.53 Consider the following two statements:

P: Every regular grammar is LL(1)
Q: Every regular set has a LR(1) grammar

Which of the following is **TRUE**?

(A) Both P and Q are true.
(B) P is true and Q is false.
(C) P is false and Q is true.
(D) Both P and Q are false.

Q.54 In a simplified computer the instructions are:

OP R_j,R_i - Performs R_j OP R_i and stores the result in register R_i.
OP *m*,R_i - Performs *val* OP R_i and stores the result in R_i. *val* denotes the content of memory location *m*.
MOV *m*,R_i - Moves the content of memory location *m* to register R_i.
MOV R_i,*m* - Moves the content of register R_i to memory location *m*.

The computer has only two registers, and OP is either ADD or SUB. Consider the following basic block:

$t_1 = a + b$
$t_2 = c + d$
$t_3 = e - t_2$
$t_4 = t_1 - t_3$

Assume that all operands are initially in memory. The final value of the computation should be in memory. What is the minimum number of MOV instructions in the code generated for this basic block?

(A) 2
(B) 3
(C) 5
(D) 6

Q.55 An operating system uses Shortest Remaining Time first (SRT) process scheduling algorithm. Consider the arrival times and execution times for the following processes:

Process	Execution time	Arrival time
P1	20	0
P2	25	15
P3	10	30
P4	15	45

What is the total waiting time for process P2?

(A) 5
(B) 15
(C) 40
(D) 55

Q.56 A virtual memory system uses First In First Out (FIFO) page replacement policy and allocates a fixed number of frames to a process. Consider the following statements:

P: Increasing the number of page frames allocated to a process sometimes increases the page fault rate.
Q: Some programs do not exhibit locality of reference.

Which one of the following is **TRUE**?

(A) Both P and Q are true, and Q is the reason for P.
(B) Both P and Q are true, but Q is not the reason for P.
(C) P is false, but Q is true.
(D) Both P and Q are false.

Q.57 A single processor system has three resource types X, Y, and Z, which are shared by three processes. There are 5 units of each resource type. Consider the following scenario, where the column ***alloc*** denotes the number of units of each resource type allocated to each process, and the column ***request*** denotes the number of units of each resource type requested by a process in order to complete execution. Which of these processes will finish **LAST**?

	alloc	*request*
	X Y Z	X Y Z
P0	1 2 1	1 0 3
P1	2 0 1	0 1 2
P2	2 2 1	1 2 0

(A) P0
(B) P1
(C) P2
(D) None of the above, since the system is in a deadlock.

Q.58 Two processes, P1 and P2, need to access a critical section of code. Consider the following synchronization construct used by the processes:

```
/* P1 */
while (true) {
   wants1 = true;
   while (wants2==true);
   /* Critical
      Section */
   wants1=false;
}
/* Remainder section */
```

```
/* P2 */
while (true) {
   wants2 = true;
   while (wants1==true);
   /* Critical
      Section */
   wants2=false;
}
/* Remainder section */
```

Here, `wants1` and `wants2` are shared variables, which are initialized to `false`. Which one of the following statements is **TRUE** about the above construct?

(A) It does not ensure mutual exclusion.
(B) It does not ensure bounded waiting.
(C) It requires that processes enter the critical section in strict alternation.
(D) It does not prevent deadlocks, but ensures mutual exclusion.

Q.59 Information about a collection of students is given by the relation **studInfo**(studId, name, sex). The relation **enroll**(studId, courseId) gives which student has enrolled for (or taken) what course(s). Assume that every course is taken by at least one male and at least one female student. What does the following relational algebra expression represent?

$$\Pi_{courseId}((\Pi_{studId}(\sigma_{sex = \text{"female"}}(studInfo)) \times \Pi_{courseId}(enroll)) - enroll)$$

(A) Courses in which all the female students are enrolled.
(B) Courses in which a proper subset of female students are enrolled.
(C) Courses in which only male students are enrolled.
(D) None of the above.

Q.60 Consider the relation **employee**(name, sex, supervisorName) with *name* as the key. *supervisorName* gives the name of the supervisor of the employee under consideration. What does the following Tuple Relational Calculus query produce?

$$\{e.name \mid employee(e) \wedge (\forall x)[\neg employee(x) \vee x.supervisorName \neq e.name \vee x.sex = \text{"male"}]\}$$

(A) Names of employees with a male supervisor.
(B) Names of employees with no immediate male subordinates.
(C) Names of employees with no immediate female subordinates.
(D) Names of employees with a female supervisor.

Q.61 Consider the table **employee**(empId, name, department, salary) and the two queries Q_1, Q_2 below. Assuming that department 5 has more than one employee, and we want to find the employees who get higher salary than anyone in the department 5, which one of the statements is **TRUE** for any arbitrary employee table?

```
Q1: Select e.empId
    From employee e
    Where not exists
        (Select * From employee s Where s.department = "5" and s.salary >= e.salary)
Q2: Select e.empId
    From employee e
    Where e.salary > Any
        ( Select distinct salary From employee s Where s.department = "5")
```

(A) Q_1 is the correct query.
(B) Q_2 is the correct query.
(C) Both Q_1 and Q_2 produce the same answer.
(D) Neither Q_1 nor Q_2 is the correct query.

Q.62 Which one of the following statements is **FALSE**?

(A) Any relation with two attributes is in BCNF.
(B) A relation in which every key has only one attribute is in 2NF.
(C) A prime attribute can be transitively dependent on a key in a 3NF relation.
(D) A prime attribute can be transitively dependent on a key in a BCNF relation.

Q.63 The order of a leaf node in a B^+-tree is the maximum number of (value, data record pointer) pairs it can hold. Given that the block size is 1K bytes, data record pointer is 7 bytes long, the value field is 9 bytes long and a block pointer is 6 bytes long, what is the order of the leaf node?

(A) 63 (B) 64 (C) 67 (D) 68

Q.64 Consider the following schedules involving two transactions. Which one of the following statements is **TRUE**?

S_1: $r_1(X); r_1(Y); r_2(X); r_2(Y); w_2(Y); w_1(X)$
S_2: $r_1(X); r_2(X); r_2(Y); w_2(Y); r_1(Y); w_1(X)$

(A) Both S_1 and S_2 are conflict serializable.
(B) S_1 is conflict serializable and S_2 is not conflict serializable.
(C) S_1 is not conflict serializable and S_2 is conflict serializable.
(D) Both S_1 and S_2 are not conflict serializable.

Q.65 There are n stations in a slotted LAN. Each station attempts to transmit with a probability p in each time slot. What is the probability that **ONLY** one station transmits in a given time slot?

(A) $np(1-p)^{n-1}$ (B) $(1-p)^{n-1}$ (C) $p(1-p)^{n-1}$ (D) $1-(1-p)^{n-1}$

Q.66 In a token ring network the transmission speed is 10^7 bps and the propagation speed is 200 metres/μs. The 1-bit delay in this network is equivalent to:

(A) 500 metres of cable.
(B) 200 metres of cable.
(C) 20 metres of cable.
(D) 50 metres of cable.

Q.67 The address of a class B host is to be split into subnets with a 6-bit subnet number. What is the maximum number of subnets and the maximum number of hosts in each subnet?

(A) 62 subnets and 262142 hosts.
(B) 64 subnets and 262142 hosts.
(C) 62 subnets and 1022 hosts.
(D) 64 subnets and 1024 hosts.

Q.68 The message 11001001 is to be transmitted using the CRC polynomial $x^3 + 1$ to protect it from errors. The message that should be transmitted is:

(A) 11001001000 (B) 11001001011 (C) 11001010 (D) 110010010011

Q.69 The distance between two stations M and N is L kilometres. All frames are K bits long. The propagation delay per kilometre is t seconds. Let R bits/second be the channel capacity. Assuming that processing delay is negligible, the *minimum* number of bits for the sequence number field in a frame for maximum utilization, when the *sliding window protocol* is used, is:

(A) $\left\lceil \log_2 \frac{2LtR + 2K}{K} \right\rceil$

(B) $\left\lceil \log_2 \frac{2LtR}{K} \right\rceil$

(C) $\left\lceil \log_2 \frac{2LtR + K}{K} \right\rceil$

(D) $\left\lceil \log_2 \frac{2LtR + K}{2K} \right\rceil$

Q.70 Match the following:

P. SMTP	1. Application layer
Q. BGP	2. Transport layer
R. TCP	3. Data link layer
S. PPP	4. Network layer
	5. Physical layer

(A) P-2, Q-1, R-3, S-5
(B) P-1, Q-4, R-2, S-3
(C) P-1, Q-4, R-2, S-5
(D) P-2, Q-4, R-1, S-3

Common Data Questions

Common Data for Questions 71,72,73:

Consider the following program segment. Here R1, R2 and R3 are the general purpose registers.

	Instruction	Operation	Instruction size (no. of words)
	MOV R1, (3000)	R1 ← M[3000]	2
LOOP:	MOV R2, (R3)	R2 ← M[R3]	1
	ADD R2, R1	R2 ← R1 + R2	1
	MOV (R3), R2	M[R3] ← R2	1
	INC R3	R3 ← R3 + 1	1
	DEC R1	R1 ← R1 − 1	1
	BNZ LOOP	Branch on not zero	2
	HALT	Stop	1

Assume that the content of memory location 3000 is 10 and the content of the register R3 is 2000. The content of each of the memory locations from 2000 to 2010 is 100. The program is loaded from the memory location 1000. All the numbers are in decimal.

Q.71 Assume that the memory is word addressable. The number of memory references for accessing the data in executing the program completely is

(A) 10 (B) 11 (C) 20 (D) 21

Q.72 Assume that the memory is word addressable. After the execution of this program, the content of memory location 2010 is

(A) 100 (B) 101 (C) 102 (D) 110

Q.73 Assume that the memory is byte addressable and the word size is 32 bits. If an interrupt occurs during the execution of the instruction "INC R3", what return address will be pushed on to the stack?

(A) 1005 (B) 1020 (C) 1024 (D) 1040

Common Data for Questions 74, 75:

Consider the following Finite State Automaton:

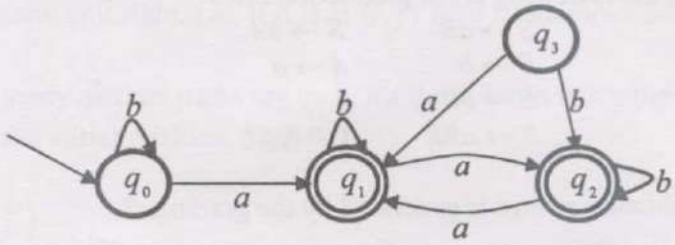

Q.74 The language accepted by this automaton is given by the regular expression

(A) $b^*ab^*ab^*ab^*$ (B) $(a+b)^*$ (C) $b^*a(a+b)^*$ (D) $b^*ab^*ab^*$

Q.75 The minimum state automaton equivalent to the above FSA has the following number of states

(A) 1 (B) 2 (C) 3 (D) 4

Linked Answer Questions: Q.76 to Q.85 carry two marks each.

Statement for Linked Answer Questions 76 & 77:

Suppose the letters a,b,c,d,e,f have probabilities $\frac{1}{2}, \frac{1}{4}, \frac{1}{8}, \frac{1}{16}, \frac{1}{32}, \frac{1}{32}$, respectively.

Q.76 Which of the following is the Huffman code for the letters a,b,c,d,e,f?

(A) 0,10,110,1110,11110,11111
(B) 11,10,011,010,001,000
(C) 11,10,01,001,0001,0000
(D) 110,100,010,000,001,111

Q.77 What is the average length of the correct answer to Q.76?

(A) 3 (B) 2.1875 (C) 2.25 (D) 1.9375

Statement for Linked Answer Questions 78 & 79:

Consider the CFG with $\{S, A, B\}$ as the non-terminal alphabet, $\{a, b\}$ as the terminal alphabet, S as the start symbol and the following set of production rules:

$$S \rightarrow aB \qquad S \rightarrow bA$$
$$B \rightarrow b \qquad A \rightarrow a$$
$$B \rightarrow bS \qquad A \rightarrow aS$$
$$B \rightarrow aBB \qquad A \rightarrow bAA$$

Q.78 Which of the following strings is generated by the grammar?

(A) *aaaabb* (B) *aabbbb* (C) *aabbab* (D) *abbbba*

Q.79 For the correct answer string to Q.78, how many derivation trees are there?

(A) 1 (B) 2 (C) 3 (D) 4

Statement for Linked Answer Questions 80 & 81:

Consider a machine with a byte addressable main memory of 2^{16} bytes. Assume that a direct mapped data cache consisting of 32 lines of 64 bytes each is used in the system. A 50×50 two-dimensional array of bytes is stored in the main memory starting from memory location 1100H. Assume that the data cache is initially empty. The complete array is accessed twice. Assume that the contents of the data cache do not change in between the two accesses.

Q.80 How many data cache misses will occur in total?

(A) 48 (B) 50 (C) 56 (D) 59

Q.81 Which of the following lines of the data cache will be replaced by new blocks in accessing the array for the second time?

(A) line 4 to line 11 (B) line 4 to line 12
(C) line 0 to line 7 (D) line 0 to line 8

Statement for Linked Answer Questions 82 & 83:

A process has been allocated 3 page frames. Assume that none of the pages of the process are available in the memory initially. The process makes the following sequence of page references (reference string): **1, 2, 1, 3, 7, 4, 5, 6, 3, 1**

Q.82 If optimal page replacement policy is used, how many page faults occur for the above reference string?

(A) 7 (B) 8 (C) 9 (D) 10

Q.83 Least Recently Used (LRU) page replacement policy is a practical approximation to optimal page replacement. For the above reference string, how many more page faults occur with LRU than with the optimal page replacement policy?

(A) 0 (B) 1 (C) 2 (D) 3

Statement for Linked Answer Questions 84 & 85:

Suppose that a robot is placed on the Cartesian plane. At each step it is allowed to move either one unit up or one unit right, i.e., if it is at (i, j) then it can move to either $(i+1, j)$ or $(i, j+1)$.

Q.84 How many distinct paths are there for the robot to reach the point $(10,10)$ starting from the initial position $(0,0)$?

(A) $\binom{20}{10}$
(B) 2^{20}
(C) 2^{10}
(D)None of the above

Q.85 Suppose that the robot is not allowed to traverse the line segment from (4,4) to (5,4). With this constraint, how many distinct paths are there for the robot to reach (10,10) starting from (0,0)?

(A) 2^9
(B) 2^{19}
(C) $\binom{8}{4}\times\binom{11}{5}$
(D) $\binom{20}{10}-\binom{8}{4}\times\binom{11}{5}$

END OF THE QUESTION PAPER