EC : ELECTRONICS AND COMMUNICATION ENGINEERING

Duration : Three Hours *Maximum Marks* :150

Read the following instructions carefully

1. This question paper contains **28** printed pages including pages for rough work. Please check all pages and report discrepancy, if any.

2. Write your registration number, your name and name of the examination centre at the specified locations on the right half of the ORS.

3. Using HB pencil, darken the appropriate bubble under each digit of your registration number and the letters corresponding to your paper code.

4. All the questions in this question paper are of objective type.

5. Questions must be answered on **Objective Response Sheet (ORS)** by darkening the appropriate bubble (marked A, B, C, D) using HB pencil against the question number on the left hand side of the ORS. **Each question has only one correct answer**. In case you wish to change an answer, erase the old answer completely. More than one answer bubbled against a question will be treated as a wrong answer.

6. Questions 1 through 20 are 1-mark questions and questions 21 through 85 are 2-mark questions.

7. Questions 71 through 73 is one set of common data questions, questions 74 and 75 is another pair of common data questions. The question pairs (76, 77), (78, 79), (80, 81), (82, 83) and (84, 85) are questions with linked answers. The answer to the second question of the above pairs will depend on the answer to the first question of the pair. If the first question in the linked pair is wrongly answered or is un-attempted, then the answer to the second question in the pair will not be evaluated.

8. Un-attempted questions will carry zero marks.

9. **NEGATIVE MARKING**: For Q.1 to Q.20, ***0.25*** mark will be deducted for each wrong answer. For Q.21 to Q.75, ***0.5*** mark will be deducted for each wrong answer. For the pairs of questions with linked answers, there will be negative marks only for wrong answer to the first question, i.e. for Q.76, Q.78, Q.80, Q.82 and Q.84, ***0.5*** mark will be deducted for each wrong answer. There is no negative marking for Q.77, Q.79, Q.81, Q.83 and Q.85.

10. Calculator **without data connectivity** is allowed in the examination hall.

11. Charts, graph sheets and tables are NOT allowed in the examination hall.

12. Rough work can be done on the question paper itself. Additional blank pages are given at the end of the question paper for rough work.

Q. 1 – Q. 20 carry one mark each.

Q.1 All the four entries of the 2×2 matrix $\mathbf{P}=\begin{bmatrix} p_{11} & p_{12} \\ p_{21} & p_{22} \end{bmatrix}$ are nonzero, and one of its eigenvalues is zero. Which of the following statements is true?

(A) $p_{11}p_{22}-p_{12}p_{21}=1$
(B) $p_{11}p_{22}-p_{12}p_{21}=-1$
(C) $p_{11}p_{22}-p_{12}p_{21}=0$
(D) $p_{11}p_{22}+p_{12}p_{21}=0$

Q.2 The system of linear equations

$$4x+2y=7$$
$$2x+\ \ y=6$$

has

(A) a unique solution
(B) no solution
(C) an infinite number of solutions
(D) exactly two distinct solutions

Q.3 The equation $\sin(z)=10$ has

(A) no real or complex solution
(B) exactly two distinct complex solutions
(C) a unique solution
(D) an infinite number of complex solutions

Q.4 For real values of x, the minimum value of the function $f(x)=\exp(x)+\exp(-x)$ is

(A) 2
(B) 1
(C) 0.5
(D) 0

Q.5 Which of the following functions would have only odd powers of x in its Taylor series expansion about the point $x=0$?

(A) $\sin(x^3)$
(B) $\sin(x^2)$
(C) $\cos(x^3)$
(D) $\cos(x^2)$

Q.6 Which of the following is a solution to the differential equation $\frac{dx(t)}{dt}+3x(t)=0$?

(A) $x(t)=3e^{-t}$
(B) $x(t)=2e^{-3t}$
(C) $x(t)=-\frac{3}{2}t^2$
(D) $x(t)=3t^2$

Q.7 In the following graph, the number of trees (P) and the number of cut-sets (Q) are

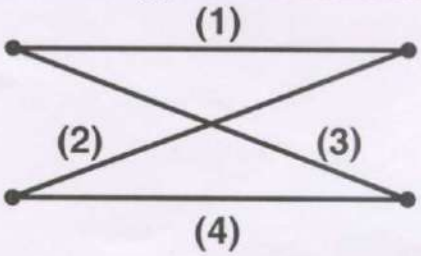

(A) P=2, Q=2
(B) P=2, Q=6
(C) P=4, Q=6
(D) P=4, Q=10

Q.8 In the following circuit, the switch S is closed at $t = 0$. The rate of change of current $\frac{di}{dt}(0+)$ is given by

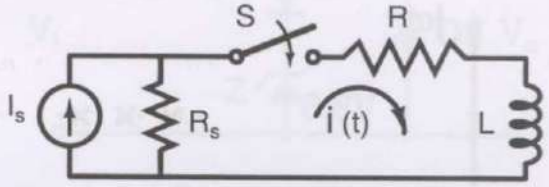

(A) 0 (B) $\frac{R_S I_S}{L}$ (C) $\frac{(R+R_S)I_S}{L}$ (D) ∞

Q.9 The input and output of a continuous time system are respectively denoted by *x(t)* and *y(t)*. Which of the following descriptions corresponds to a causal system?

(A) $y(t) = x(t-2) + x(t+4)$
(B) $y(t) = (t-4)\,x(t+1)$
(C) $y(t) = (t+4)\,x(t-1)$
(D) $y(t) = (t+5)\,x(t+5)$

Q.10 The impulse response $h(t)$ of a linear time-invariant continuous time system is described by $h(t) = \exp(\alpha t)u(t) + \exp(\beta t)u(-t)$, where *u(t)* denotes the unit step function, and α and β are real constants. This system is stable if

(A) α is positive and β is positive
(B) α is negative and β is negative
(C) α is positive and β is negative
(D) α is negative and β is positive

Q.11 The pole-zero plot given below corresponds to a

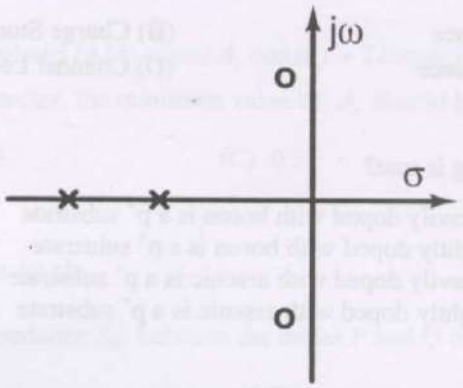

(A) Low pass filter
(B) High pass filter
(C) Band pass filter
(D) Notch filter

Q.12 Step responses of a set of three second-order underdamped systems all have the same percentage overshoot. Which of the following diagrams represents the poles of the three systems?

(A)

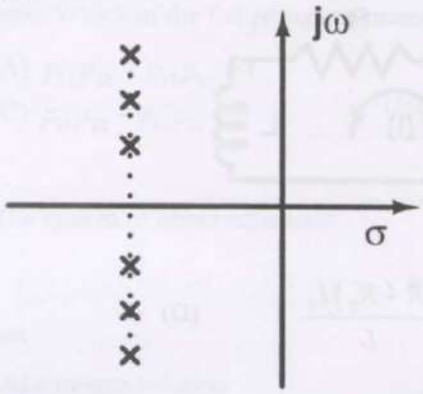

(B)

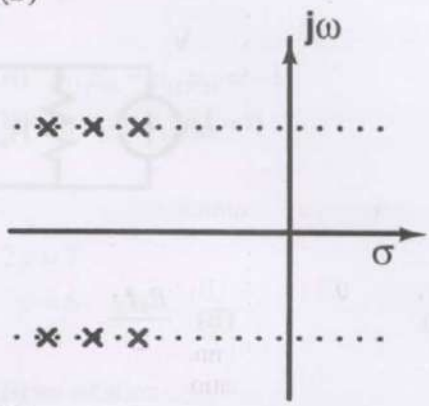

(C)

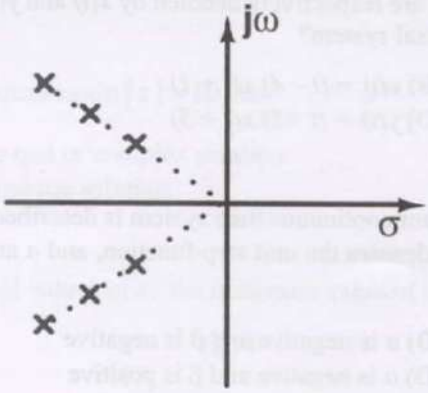

(D)

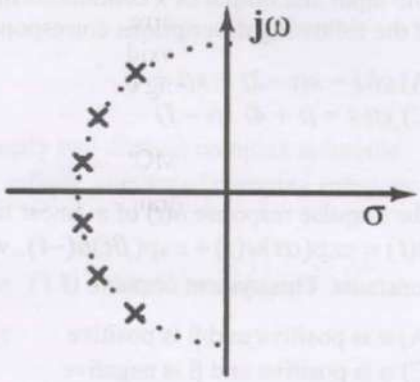

Q.13 Which of the following is NOT associated with a p-n junction?

(A) Junction Capacitance
(B) Charge Storage Capacitance
(C) Depletion Capacitance
(D) Channel Length Modulation

Q.14 Which of the following is true?

(A) A silicon wafer heavily doped with boron is a p^+ substrate
(B) A silicon wafer lightly doped with boron is a p^+ substrate
(C) A silicon wafer heavily doped with arsenic is a p^+ substrate
(D) A silicon wafer lightly doped with arsenic is a p^+ substrate

Q.15 For a Hertz dipole antenna, the half power beam width (HPBW) in the E-plane is

(A) 360^0
(B) 180^0
(C) 90^0
(D) 45^0

Q.16 For static electric and magnetic fields in an inhomogeneous source-free medium, which of the following represents the correct form of two of Maxwell's equations?

(A) $\nabla \cdot \mathbf{E} = 0$, $\nabla \times \mathbf{B} = 0$
(B) $\nabla \cdot \mathbf{E} = 0$, $\nabla \cdot \mathbf{B} = 0$
(C) $\nabla \times \mathbf{E} = 0$, $\nabla \times \mathbf{B} = 0$
(D) $\nabla \times \mathbf{E} = 0$, $\nabla \cdot \mathbf{B} = 0$

Q.17 In the following limiter circuit, an input voltage $V_i = 10\sin 100\pi t$ is applied. Assume that the diode drop is 0.7 V when it is forward biased. The Zener breakdown voltage is 6.8 V.

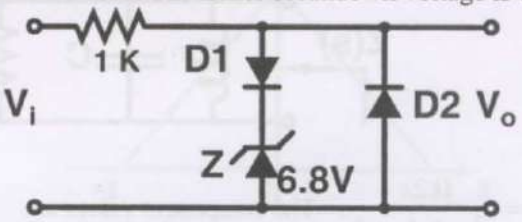

The maximum and minimum values of the output voltage respectively are

(A) 6.1 V, - 0.7 V (B) 0.7 V, - 7.5 V (C) 7.5 V, - 0.7 V (D) 7.5 V, - 7.5 V

Q.18 A silicon wafer has 100 nm of oxide on it and is inserted in a furnace at a temperature above 1000^0C for further oxidation in dry oxygen. The oxidation rate

(A) is independent of current oxide thickness and temperature
(B) is independent of current oxide thickness but depends on temperature
(C) slows down as the oxide grows
(D) is zero as the existing oxide prevents further oxidation

Q.19 The drain current of a MOSFET in saturation is given by $I_D = K(V_{GS} - V_T)^2$ where K is a constant. The magnitude of the transconductance g_m is

(A) $\dfrac{K(V_{GS} - V_T)^2}{V_{DS}}$ (B) $2K(V_{GS} - V_T)$

(C) $\dfrac{I_d}{V_{GS} - V_{DS}}$ (D) $\dfrac{K(V_{GS} - V_T)^2}{V_{GS}}$

Q.20 Consider the amplitude modulated (AM) signal $A_c \cos\omega_c t + 2\cos\omega_m t \cos\omega_c t$. For demodulating the signal using envelope detector, the minimum value of A_c should be

(A) 2 (B) 1 (C) 0.5 (D) 0

Q. 21 to Q.75 carry two marks each.

Q.21 The Thevenin equivalent impedance Z_{th} between the nodes P and Q in the following circuit is

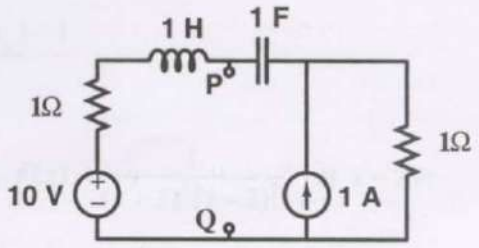

(A) 1 (B) $1 + s + \dfrac{1}{s}$ (C) $2 + s + \dfrac{1}{s}$ (D) $\dfrac{s^2 + s + 1}{s^2 + 2s + 1}$

Q.22 The driving point impedance of the following network

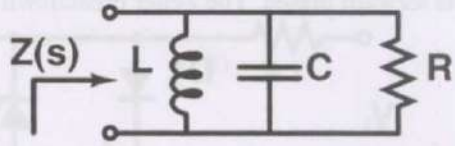

is given by $Z(s)=\dfrac{0.2s}{s^2+0.1s+2}$. The component values are

(A) L= 5 H, R= 0.5 Ω, C= 0.1F
(B) L= 0.1 H, R= 0.5 Ω, C= 5F
(C) L= 5 H, R= 2 Ω, C= 0.1F
(D) L= 0.1 H, R= 2 Ω, C= 5F

Q.23 The circuit shown in the figure is used to charge the capacitor C alternately from two current sources as indicated. The switches S1 and S2 are mechanically coupled and connected as follows:

For $2nT \le t < (2n+1)T$, $(n=0,1,2,\cdots)$ S1 to P1 and S2 to P2.

For $(2n+1)T \le t < (2n+2)T$, $(n=0,1,2,\cdots)$ S1 to Q1 and S2 to Q2.

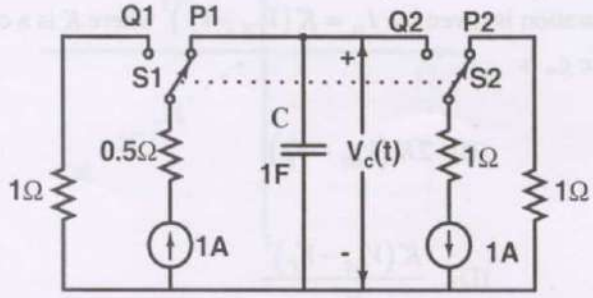

Assume that the capacitor has zero initial charge. Given that $u(t)$ is a unit step function, the voltage $V_c(t)$ across the capacitor is given by

(A) $\sum_{n=0}^{\infty}(-1)^n t u(t-nT)$

(B) $u(t)+2\sum_{n=1}^{\infty}(-1)^n u(t-nT)$

(C) $t\,u(t)+2\sum_{n=1}^{\infty}(-1)^n (t-nT)u(t-nT)$

(D) $\sum_{n=0}^{\infty}\left[0.5-e^{-(t-2nT)}+0.5e^{-(t-2nT-T)}\right]$

Q.24 The probability density function (PDF) of a random variable X is as shown below.

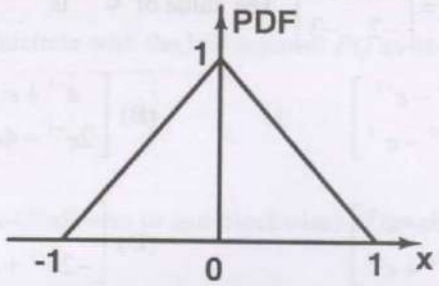

The corresponding cumulative distribution function (CDF) has the form

(A)

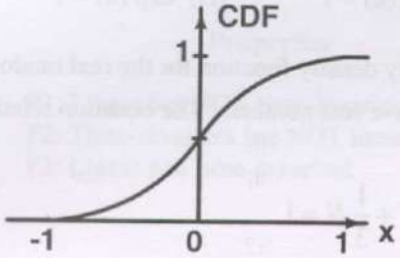

(B)

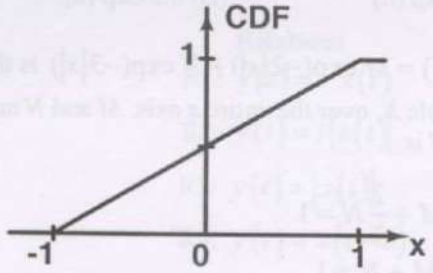

(C)

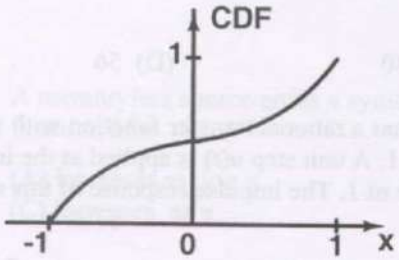

(D)

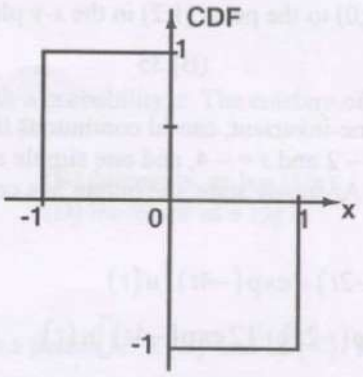

Q.25 The recursion relation to solve $x = e^{-x}$ using Newton-Raphson method is

(A) $x_{n+1} = e^{-x_n}$

(B) $x_{n+1} = x_n - e^{-x_n}$

(C) $x_{n+1} = (1 + x_n)\dfrac{e^{-x_n}}{1 + e^{-x_n}}$

(D) $x_{n+1} = \dfrac{x_n^2 - e^{-x_n}(1 + x_n) - 1}{x_n - e^{-x_n}}$

Q.26 The residue of the function $f(z) = \dfrac{1}{(z+2)^2(z-2)^2}$ at $z = 2$ is

(A) $-\dfrac{1}{32}$ (B) $-\dfrac{1}{16}$ (C) $\dfrac{1}{16}$ (D) $\dfrac{1}{32}$

Q.27 Consider the matrix $\mathbf{P} = \begin{bmatrix} 0 & 1 \\ -2 & -3 \end{bmatrix}$. The value of $e^{\mathbf{P}}$ is

(A) $\begin{bmatrix} 2e^{-2} - 3e^{-1} & e^{-1} - e^{-2} \\ 2e^{-2} - 2e^{-1} & 5e^{-2} - e^{-1} \end{bmatrix}$

(B) $\begin{bmatrix} e^{-1} + e^{-2} & 2e^{-2} - e^{-1} \\ 2e^{-1} - 4e^{-2} & 3e^{-1} + 2e^{-2} \end{bmatrix}$

(C) $\begin{bmatrix} 5e^{-2} - e^{-1} & 3e^{-1} - e^{-2} \\ 2e^{-2} - 6e^{-1} & 4e^{-2} + e^{-1} \end{bmatrix}$

(D) $\begin{bmatrix} 2e^{-1} - e^{-2} & e^{-1} - e^{-2} \\ -2e^{-1} + 2e^{-2} & -e^{-1} + 2e^{-2} \end{bmatrix}$

Q.28 In the Taylor series expansion of $\exp(x) + \sin(x)$ about the point $x = \pi$, the coefficient of $(x - \pi)^2$ is

(A) $\exp(\pi)$ (B) $0.5 \exp(\pi)$ (C) $\exp(\pi) + 1$ (D) $\exp(\pi) - 1$

Q.29 $P_X(x) = M \exp(-2|x|) + N \exp(-3|x|)$ is the probability density function for the real random variable X, over the entire x axis. M and N are both positive real numbers. The equation relating M and N is

(A) $M + \frac{2}{3}N = 1$ (B) $2M + \frac{1}{3}N = 1$

(C) $M + N = 1$ (D) $M + N = 3$

Q.30 The value of the integral of the function $g(x, y) = 4x^3 + 10y^4$ along the straight line segment from the point (0,0) to the point (1,2) in the x-y plane is

(A) 33 (B) 35 (C) 40 (D) 56

Q.31 A linear, time-invariant, causal continuous time system has a rational transfer function with simple poles at $s = -2$ and $s = -4$, and one simple zero at $s = -1$. A unit step $u(t)$ is applied at the input of the system. At steady state, the output has constant value of 1. The impulse response of this system is

(A) $\left[\exp(-2t) + \exp(-4t)\right]u(t)$ (B) $\left[-4\exp(-2t) + 12\exp(-4t) - \exp(-t)\right]u(t)$

(C) $\left[-4\exp(-2t) + 12\exp(-4t)\right]u(t)$ (D) $\left[-0.5\exp(-2t) + 1.5\exp(-4t)\right]u(t)$

Q.32 The signal $x(t)$ is described by

$$x(t) = \begin{cases} 1 & \text{for } -1 \le t \le +1 \\ 0 & \text{otherwise} \end{cases}$$

Two of the angular frequencies at which its Fourier transform becomes zero are

(A) $\pi, 2\pi$ (B) $0.5\pi, 1.5\pi$ (C) $0, \pi$ (D) $2\pi, 2.5\pi$

Q.33 A discrete time linear shift-invariant system has an impulse response $h[n]$ with $h[0] = 1$, $h[1] = -1$, $h[2] = 2$, and zero otherwise. The system is given an input sequence $x[n]$ with $x[0] = x[2] = 1$, and zero otherwise. The number of nonzero samples in the output sequence $y[n]$, and the value of $y[2]$ are, respectively

(A) 5, 2 (B) 6, 2 (C) 6, 1 (D) 5, 3

Q.34 Consider points P and Q in the x-y plane, with P=(1,0) and Q=(0,1). The line integral $2\int_P^Q (xdx + ydy)$ along the semicircle with the line segment PQ as its diameter

(A) is -1
(B) is 0
(C) is 1
(D) depends on the direction (clockwise or anti-clockwise) of the semicircle

Q.35 Let $x(t)$ be the input and $y(t)$ be the output of a continuous time system. Match the system properties P1, P2 and P3 with system relations R1, R2, R3, R4.

Properties	Relations
P1: Linear but NOT time-invariant	R1: $y(t) = t^2 x(t)$
P2: Time-invariant but NOT linear	R2: $y(t) = t\lvert x(t)\rvert$
P3: Linear and time-invariant	R3: $y(t) = \lvert x(t)\rvert$
	R4: $y(t) = x(t-5)$

(A) (P1, R1), (P2, R3), (P3, R4)
(B) (P1, R2), (P2, R3), (P3, R4)
(C) (P1, R3), (P2, R1), (P3, R2)
(D) (P1, R1), (P2, R2), (P3, R3)

Q.36 A memoryless source emits n symbols each with a probability p. The entropy of the source as a function of n

(A) increases as $\log n$
(B) decreases as $\log (1/n)$
(C) increases as n
(D) increases as $n \log n$

Q.37 $\{x(n)\}$ is a real-valued periodic sequence with a period N. $x(n)$ and $X(k)$ form N-point Discrete Fourier Transform (DFT) pairs. The DFT $Y(k)$ of the sequence

$y(n) = \frac{1}{N}\sum_{r=0}^{N-1} x(r)\, x(n+r)$ is

(A) $\lvert X(k)\rvert^2$
(B) $\frac{1}{N}\sum_{r=0}^{N-1} X(r) X^*(k+r)$
(C) $\frac{1}{N}\sum_{r=0}^{N-1} X(r) X\ (k+r)$
(D) 0

Q.38

Group I lists a set of four transfer functions. Group II gives a list of possible step responses $y(t)$. Match the step responses with the corresponding transfer functions.

Group I

$$P = \frac{25}{s^2+25} \qquad Q = \frac{36}{s^2+20s+36} \qquad R = \frac{36}{s^2+12s+36} \qquad S = \frac{49}{s^2+7s+49}$$

Group II

1.

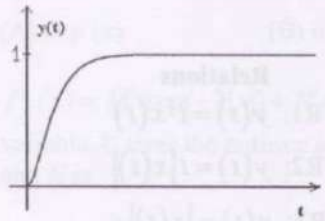

2.

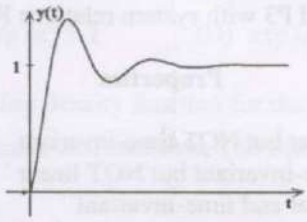

3.

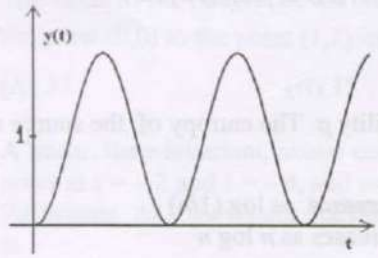

4.

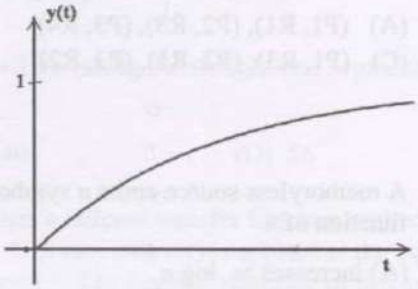

(A) P-3, Q-1, R-4, S-2
(B) P-3, Q-2, R-4, S-1
(C) P-2, Q-1, R-4, S-3
(D) P-3, Q-4, R-1, S-2

Q.39

A certain system has transfer function $G(s) = \dfrac{s+8}{s^2+\alpha s-4}$, where α is a parameter. Consider the standard negative unity feedback configuration as shown below.

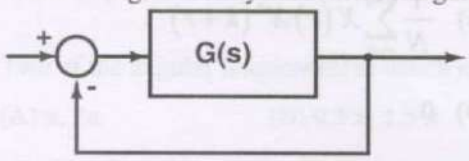

Which of the following statements is true?

(A) The closed loop system is never stable for any value of α.
(B) For some positive values of α, the closed loop system is stable, but not for all positive values.
(C) For all positive values of α, the closed loop system is stable.
(D) The closed loop system is stable for all values of α, both positive and negative.

Q.40 A signal flow graph of a system is given below.

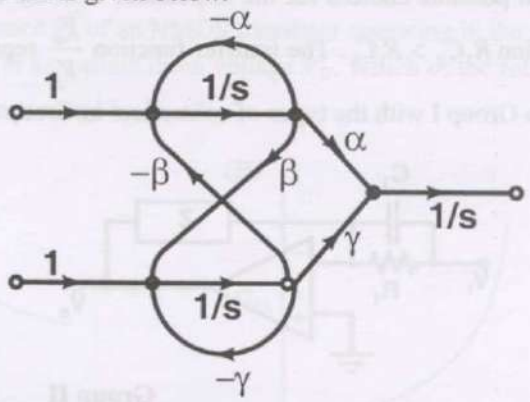

The set of equations that correspond to this signal flow graph is

(A) $\frac{d}{dt}\begin{pmatrix} x_1 \\ x_2 \\ x_3 \end{pmatrix} = \begin{bmatrix} \beta & -\gamma & 0 \\ \gamma & \alpha & 0 \\ -\alpha & -\beta & 0 \end{bmatrix}\begin{pmatrix} x_1 \\ x_2 \\ x_3 \end{pmatrix} + \begin{bmatrix} 1 & 0 \\ 0 & 0 \\ 0 & 1 \end{bmatrix}\begin{pmatrix} u_1 \\ u_2 \end{pmatrix}$

(B) $\frac{d}{dt}\begin{pmatrix} x_1 \\ x_2 \\ x_3 \end{pmatrix} = \begin{bmatrix} 0 & \alpha & \gamma \\ 0 & -\alpha & -\gamma \\ 0 & \beta & -\beta \end{bmatrix}\begin{pmatrix} x_1 \\ x_2 \\ x_3 \end{pmatrix} + \begin{bmatrix} 0 & 0 \\ 0 & 1 \\ 1 & 0 \end{bmatrix}\begin{pmatrix} u_1 \\ u_2 \end{pmatrix}$

(C) $\frac{d}{dt}\begin{pmatrix} x_1 \\ x_2 \\ x_3 \end{pmatrix} = \begin{bmatrix} -\alpha & \beta & 0 \\ -\beta & -\gamma & 0 \\ \alpha & \gamma & 0 \end{bmatrix}\begin{pmatrix} x_1 \\ x_2 \\ x_3 \end{pmatrix} + \begin{bmatrix} 1 & 0 \\ 0 & 1 \\ 0 & 0 \end{bmatrix}\begin{pmatrix} u_1 \\ u_2 \end{pmatrix}$

(D) $\frac{d}{dt}\begin{pmatrix} x_1 \\ x_2 \\ x_3 \end{pmatrix} = \begin{bmatrix} -\gamma & 0 & \beta \\ \gamma & 0 & \alpha \\ -\beta & 0 & -\alpha \end{bmatrix}\begin{pmatrix} x_1 \\ x_2 \\ x_3 \end{pmatrix} + \begin{bmatrix} 0 & 1 \\ 0 & 0 \\ 1 & 0 \end{bmatrix}\begin{pmatrix} u_1 \\ u_2 \end{pmatrix}$

Q.41 The number of open right half plane poles of $G(s) = \frac{10}{s^5 + 2s^4 + 3s^3 + 6s^2 + 5s + 3}$ is

(A) 0 (B) 1 (C) 2 (D) 3

Q.42 The magnitude of frequency response of an underdamped second order system is 5 at 0 rad/sec and peaks to $\frac{10}{\sqrt{3}}$ at $5\sqrt{2}$ rad/sec. The transfer function of the system is

(A) $\frac{500}{s^2 + 10s + 100}$ (B) $\frac{375}{s^2 + 5s + 75}$

(C) $\frac{720}{s^2 + 12s + 144}$ (D) $\frac{1125}{s^2 + 25s + 225}$

Q.43 Group I gives two possible choices for the impedance Z in the diagram. The circuit elements in Z satisfy the condition $R_2C_2 > R_1C_1$. The transfer function $\frac{V_o}{V_i}$ represents a kind of controller. Match the impedances in Group I with the types of controllers in Group II.

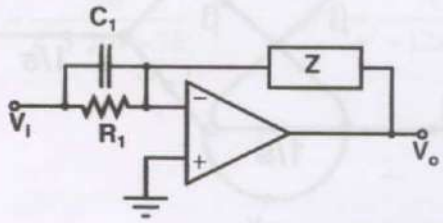

Group I

Q.

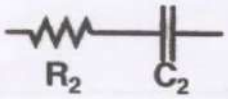

R.

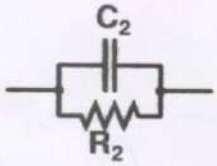

Group II

1. PID controller
2. Lead compensator
3. Lag compensator

(A) Q-1, R-2 (B) Q-1, R-3 (C) Q-2, R-3 (D) Q-3, R-2

Q.44 For the circuit shown in the following figure, transistors M1 and M2 are identical NMOS transistors. Assume that M2 is in saturation and the output is unloaded.

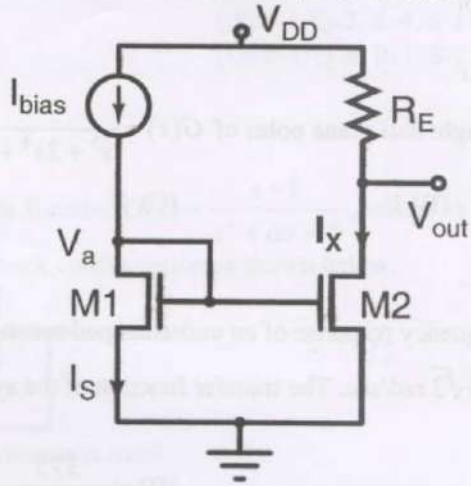

The current I_X is related to I_{bias} as

(A) $I_X = I_{bias} + I_S$

(B) $I_X = I_{bias}$

(C) $I_X = I_{bias} - I_S$

(D) $I_X = I_{bias} - \left(V_{DD} - \frac{V_{out}}{R_E}\right)$

Q.45 The measured transconductance g_m of an NMOS transistor operating in the linear region is plotted against the gate voltage V_G at a constant drain voltage V_D. Which of the following figures represents the expected dependence of g_m on V_G ?

(A)

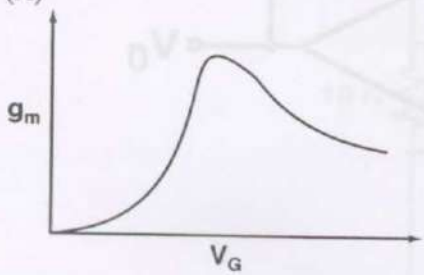

(B)

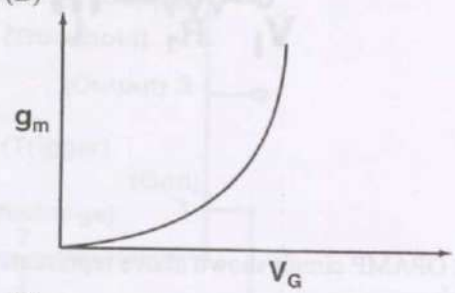

(C)

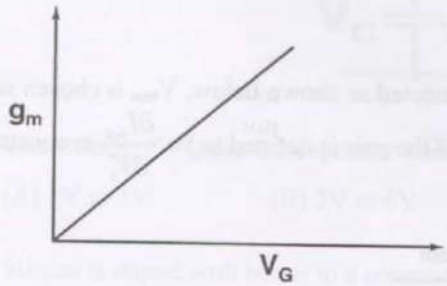

(D)

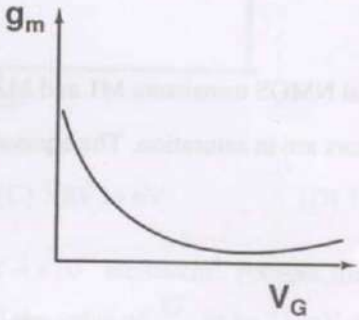

Q.46 Consider the following circuit using an ideal OPAMP. The I-V characteristics of the diode is described by the relation $I = I_0\left(e^{\frac{V}{V_T}} - 1\right)$ where V_T =25 mV, I_0 =1μA and V is the voltage across the diode (taken as positive for forward bias).

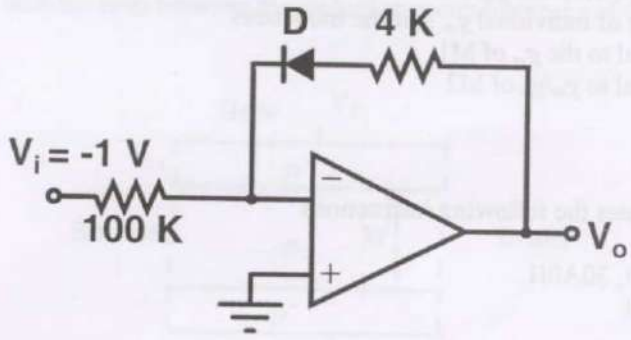

For an input voltage V_i = -1 V, the output voltage V_o is

(A) 0 V (B) 0.1 V (C) 0.7 V (D) 1.1 V

Q.47

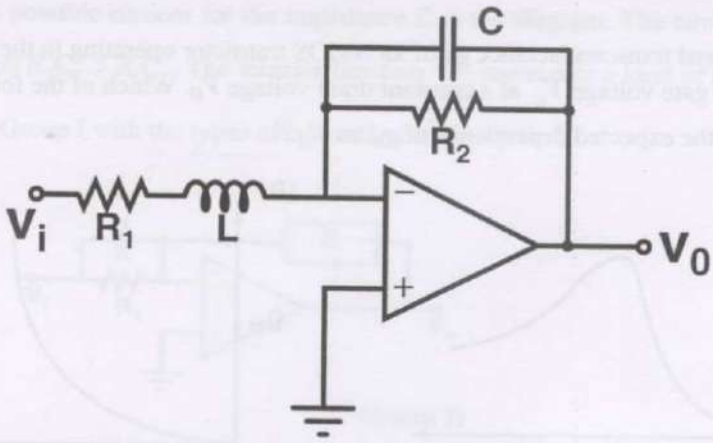

The OPAMP circuit shown above represents a

(A) high pass filter (B) low pass filter (C) band pass filter (D) band reject filter

Q.48 Two identical NMOS transistors M1 and M2 are connected as shown below. V_{bias} is chosen so that both transistors are in saturation. The equivalent g_m of the pair is defined to be $\frac{\partial I_{out}}{\partial V_i}$ at constant V_{out}.

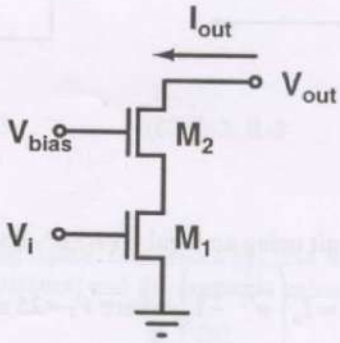

The equivalent g_m of the pair is

(A) the sum of individual g_m's of the transistors
(B) the product of individual g_m's of the transistors
(C) nearly equal to the g_m of M1
(D) nearly equal to g_m/g_0 of M2

Q.49 An 8085 executes the following instructions

2710 LXI H, 30A0H
2713 DAD H
2714 PCHL

All addresses and constants are in Hex. Let PC be the contents of the program counter and HL be the contents of the HL register pair just after executing PCHL.

Which of the following statements is correct

(A) PC = 2715H, HL = 30A0H (B) PC = 30A0H, HL = 2715H (C) PC = 6140H, HL = 6140H (D) PC = 6140H, HL = 2715H

Q.50 An astable multivibrator circuit using IC 555 timer is shown below. Assume that the circuit is oscillating steadily.

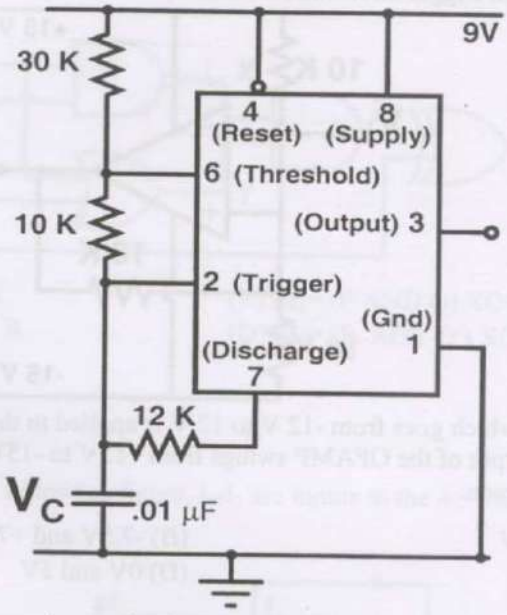

The voltage V_C across the capacitor varies between

(A) 3V to 5V (B) 3V to 6V (C) 3.6V to 6V (D) 3.6V to 5V

Q.51 Silicon is doped with boron to a concentration of 4×10^{17} atoms/cm^3. Assume the intrinsic carrier concentration of silicon to be 1.5×10^{10} /cm^3 and the value of $\frac{kT}{q}$ to be 25 mV at 300 K.

Compared to undoped silicon, the Fermi level of doped silicon

(A) goes down by 0.13 eV
(B) goes up by 0.13 eV
(C) goes down by 0.427 eV
(D) goes up by 0.427 eV

Q.52 The cross section of a JFET is shown in the following figure. Let V_G be -2V and let V_P be the initial pinch-off voltage. If the width W is doubled (with other geometrical parameters and doping levels remaining the same), then the ratio between the mutual transconductances of the initial and the modified JFET is

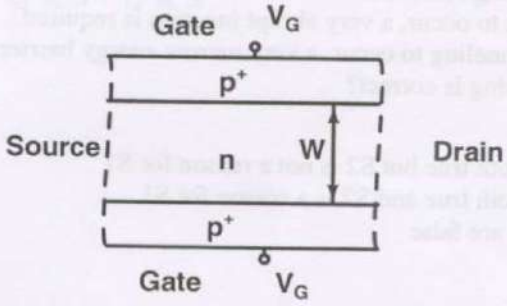

(A) 4

(B) $\frac{1}{2}\left(\frac{1-\sqrt{2/V_P}}{1-\sqrt{1/(2V_P)}}\right)$

(C) $\frac{1-\sqrt{2/V_P}}{1-\sqrt{1/(2V_P)}}$

(D) $\frac{1-\left(2/\sqrt{V_P}\right)}{1-\left(1/\left(2\sqrt{V_P}\right)\right)}$

Q.53 Consider the Schmidt trigger circuit shown below.

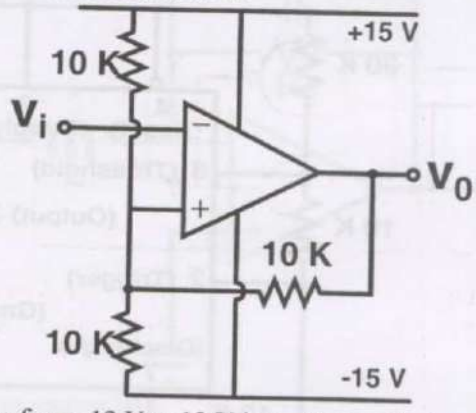

A triangular wave which goes from -12 V to 12 V is applied to the inverting input of the OPAMP. Assume that the output of the OPAMP swings from +15V to -15V. The voltage at the non-inverting input switches between

(A) -12V and +12 V
(B) -7.5V and +7.5V
(C) -5V and +5 V
(D) 0V and 5V

Q.54 The logic function implemented by the following circuit at the terminal OUT is

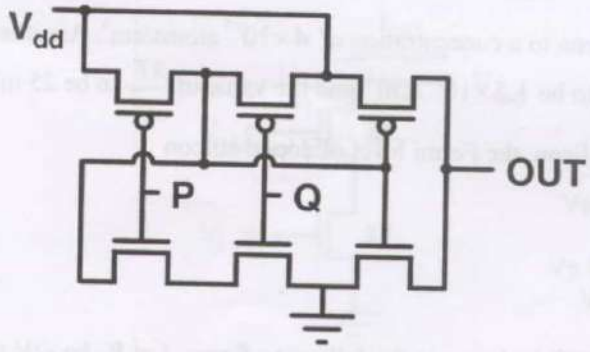

(A) P NOR Q
(B) P NAND Q
(C) P OR Q
(D) P AND Q

Q.55 Consider the following assertions.
S1: For Zener effect to occur, a very abrupt junction is required.
S2: For quantum tunneling to occur, a very narrow energy barrier is required.
Which of the following is correct?

(A) Only S2 is true
(B) S1 and S2 are both true but S2 is not a reason for S1
(C) S1 and S2 are both true and S2 is a reason for S1
(D) Both S1 and S2 are false

Q.56 The two numbers represented in signed 2's complement form are P = 11101101 and Q = 11100110. If Q is subtracted from P, the value obtained in signed 2's complement form is

(A) 100000111
(B) 00000111
(C) 11111001
(D) 111111001

Q.57 Which of the following Boolean Expressions correctly represents the relation between P, Q, R and M_1?

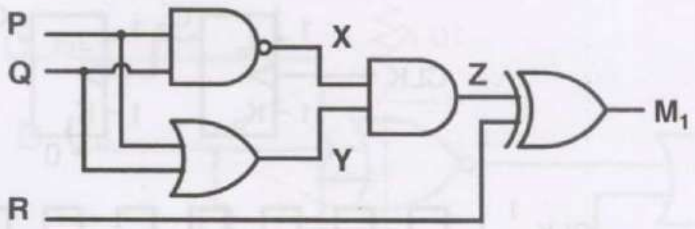

(A) M_1 = (P OR Q) XOR R
(B) M_1= (P AND Q) XOR R
(C) M_1 = (P NOR Q) XOR R
(D) M_1= (P XOR Q) XOR R

Q.58 For the circuit shown in the following figure, I_0-I_3 are inputs to the 4 : 1 multiplexer. R (MSB) and S are control bits.

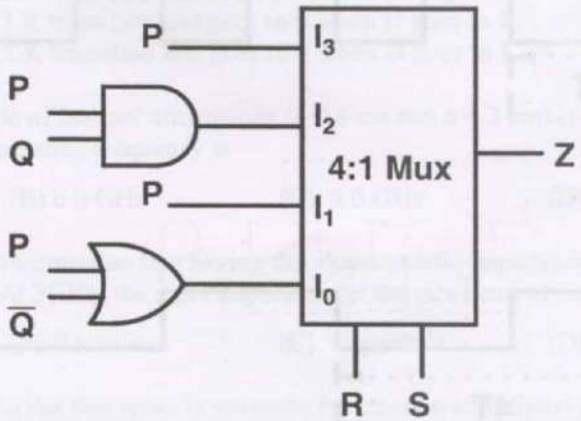

The output Z can be represented by

(A) $PQ + P\overline{Q}S + \overline{Q}\,\overline{R}\,\overline{S}$

(B) $P\overline{Q} + PQ\overline{R} + \overline{P}\,\overline{Q}\,\overline{S}$

(C) $P\overline{Q}\,\overline{R} + \overline{P}QR + PQRS + \overline{Q}\,\overline{R}\,\overline{S}$

(D) $PQ\overline{R} + PQR\overline{S} + P\overline{Q}\,\overline{R}S + \overline{Q}\,\overline{R}\,\overline{S}$

Q.59 For each of the positive edge-triggered J-K flip flop used in the following figure, the propagation delay is ΔT.

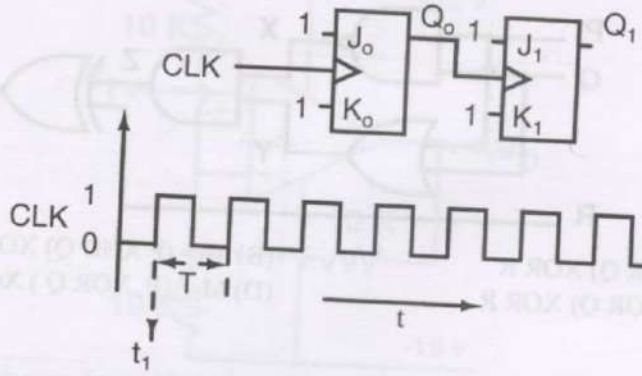

Which of the following waveforms correctly represents the output at Q_1?

(A)

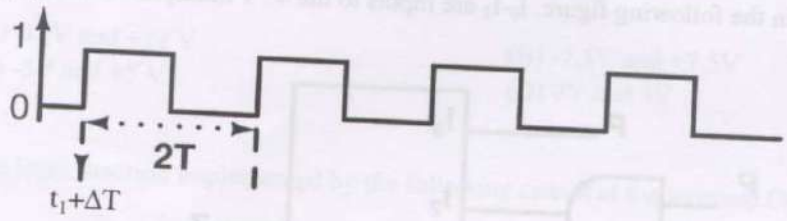

(B)

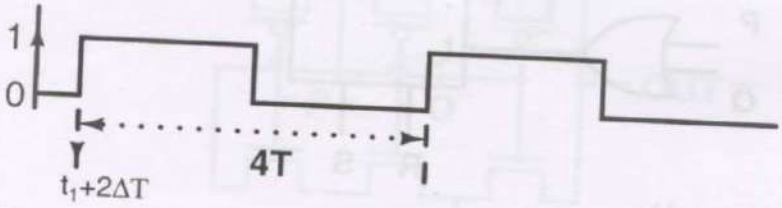

(C)

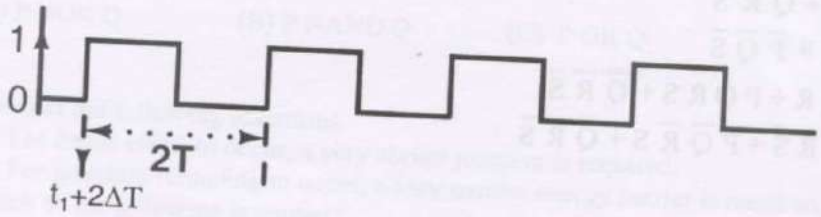

(D)

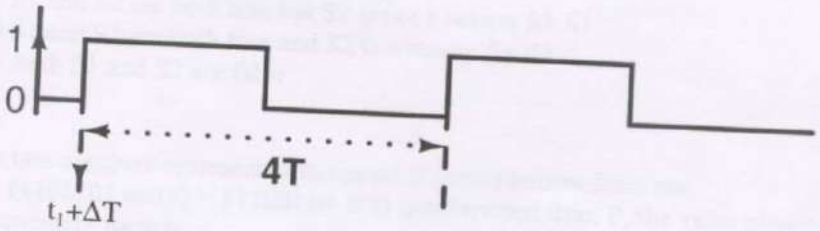

Q.60 For the circuit shown in the figure, D has a transition from 0 to 1 after CLK changes from 1 to 0. Assume gate delays to be negligible.

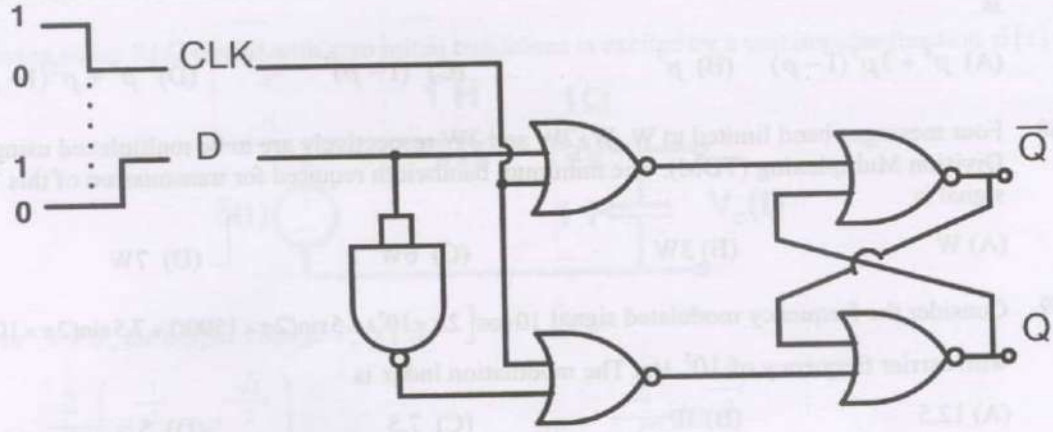

Which of the following statements is true?

(A) Q goes to 1 at the CLK transition and stays at 1.
(B) Q goes to 0 at the CLK transition and stays at 0.
(C) Q goes to 1 at the CLK transition and goes to 0 when D goes to 1.
(D) Q goes to 0 at the CLK transition and goes to 1 when D goes to 1.

Q.61 A rectangular waveguide of internal dimensions (a = 4 cm and b = 3 cm) is to be operated in TE_{11} mode. The minimum operating frequency is

(A) 6.25 GHz (B) 6.0 GHz (C) 5.0 GHz (D) 3.75 GHz

Q.62 One end of a loss-less transmission line having the characteristic impedance of 75Ω and length of 1cm is short-circuited. At 3GHz, the input impedance at the other end of the transmission line is

(A) 0 (B) Resistive (C) Capacitive (D) Inductive

Q.63 A uniform plane wave in the free space is normally incident on an infinitely thick dielectric slab (dielectric constant $\varepsilon_r = 9$). The magnitude of the reflection coefficient is

(A) 0 (B) 0.3 (C) 0.5 (D) 0.8

Q.64 In the design of a single mode step index optical fiber close to upper cut-off, the single-mode operation is NOT preserved if

(A) radius as well as operating wavelength are halved
(B) radius as well as operating wavelength are doubled
(C) radius is halved and operating wavelength is doubled
(D) radius is doubled and operating wavelength is halved

Q.65 At 20 GHz, the gain of a parabolic dish antenna of 1 meter diameter and 70% efficiency is

(A) 15 dB (B) 25 dB (C) 35 dB (D) 45 dB

Q.66 Noise with double-sided power spectral density of K over all frequencies is passed through a RC low pass filter with 3 dB cut-off frequency of f_c. The noise power at the filter output is

(A) K (B) $K f_c$ (C) $K\pi f_c$ (D) ∞

Q.67 Consider a Binary Symmetric Channel (BSC) with probability of error being p. To transmit a bit, say 1, we transmit a sequence of three 1s. The receiver will interpret the received sequence to represent 1 if at least two bits are 1. The probability that the transmitted bit will be received in error is

(A) $p^3+3p^2(1-p)$ (B) p^3 (C) $(1-p)^3$ (D) $p^3+p^2(1-p)$

Q.68 Four messages band limited to W, W, 2W and 3W respectively are to be multiplexed using Time Division Multiplexing (TDM). The minimum bandwidth required for transmission of this TDM signal is

(A) W (B) 3W (C) 6W (D) 7W

Q.69 Consider the frequency modulated signal $10\cos\left[2\pi\times10^5 t+5\sin(2\pi\times1500t)+7.5\sin(2\pi\times1000t)\right]$ with carrier frequency of 10^5 Hz. The modulation index is

(A) 12.5 (B) 10 (C) 7.5 (D) 5

Q.70 The signal $\cos\omega_c t+0.5\cos\omega_m t\sin\omega_c t$ is

(A) FM only (B) AM only
(C) both AM and FM (D) neither AM nor FM

Common Data Questions

Common Data for Questions 71, 72 and 73:

A speech signal, band limited to 4 kHz and peak voltage varying between +5V and -5V, is sampled at the Nyquist rate. Each sample is quantized and represented by 8 bits.

Q.71 If the bits 0 and 1 are transmitted using bipolar pulses, the minimum bandwidth required for distortion free transmission is

(A) 64 kHz (B) 32 kHz (C) 8 kHz (D) 4 kHz

Q.72 Assuming the signal to be uniformly distributed between its peak to peak value, the signal to noise ratio at the quantizer output is

(A) 16 dB (B) 32 dB (C) 48 dB (D) 64 dB

Q.73 The number of quantization levels required to reduce the quantization noise by a factor of 4 would be

(A) 1024 (B) 512 (C) 256 (D) 64

Common Data for Questions 74 and 75:

The following series RLC circuit with zero initial conditions is excited by a unit impulse function $\delta(t)$.

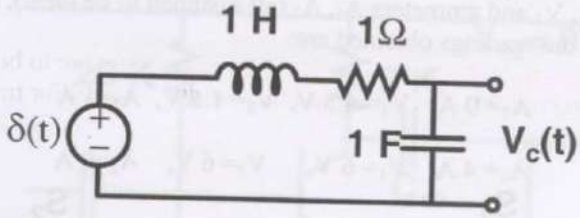

Q.74 For $t > 0$, the output voltage $V_c(t)$ is

(A) $\frac{2}{\sqrt{3}}\left(e^{-\frac{1}{2}t} - e^{-\frac{\sqrt{3}}{2}t}\right)$

(B) $\frac{2}{\sqrt{3}} t e^{-\frac{1}{2}t}$

(C) $\frac{2}{\sqrt{3}} e^{-\frac{1}{2}t} \cos\left(\frac{\sqrt{3}}{2}t\right)$

(D) $\frac{2}{\sqrt{3}} e^{-\frac{1}{2}t} \sin\left(\frac{\sqrt{3}}{2}t\right)$

Q.75 For $t > 0$, the voltage across the resistor is

(A) $\frac{1}{\sqrt{3}}\left(e^{-\frac{\sqrt{3}}{2}t} - e^{-\frac{1}{2}t}\right)$

(B) $e^{-\frac{1}{2}t}\left[\cos\left(\frac{\sqrt{3}\,t}{2}\right) - \frac{1}{\sqrt{3}}\sin\left(\frac{\sqrt{3}\,t}{2}\right)\right]$

(C) $\frac{2}{\sqrt{3}} e^{-\frac{1}{2}t} \sin\left(\frac{\sqrt{3}\,t}{2}\right)$

(D) $\frac{2}{\sqrt{3}} e^{-\frac{1}{2}t} \cos\left(\frac{\sqrt{3}\,t}{2}\right)$

Linked Answer Questions: Q.76 to Q.85 carry two marks each.

Statement for Linked Answer Questions 76 and 77:

A two-port network shown below is excited by external dc sources. The voltages and the currents are measured with voltmeters V_1, V_2 and ammeters A_1, A_2 (all assumed to be ideal), as indicated. Under following switch conditions, the readings obtained are:

(i) S_1 – Open, S_2 - Closed $A_1 = 0$ A, $V_1 = 4.5$ V, $V_2 = 1.5$ V, $A_2 = 1$ A

(ii) S_1 – Closed, S_2 - Open $A_1 = 4$ A, $V_1 = 6$ V, $V_2 = 6$ V, $A_2 = 0$ A

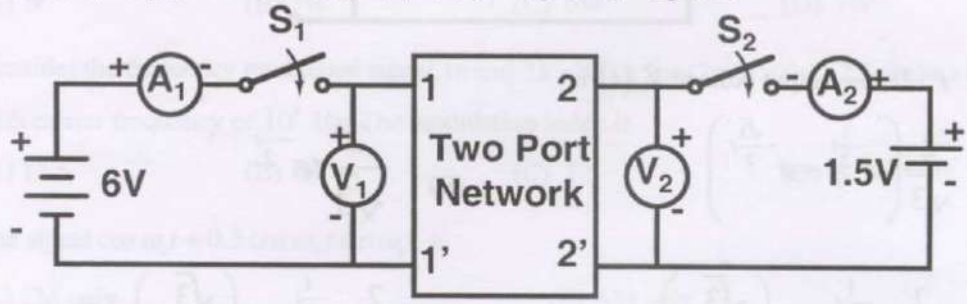

Q.76 The z-parameter matrix for this network is

(A) $\begin{bmatrix} 1.5 & 1.5 \\ 4.5 & 1.5 \end{bmatrix}$ (B) $\begin{bmatrix} 1.5 & 4.5 \\ 1.5 & 4.5 \end{bmatrix}$ (C) $\begin{bmatrix} 1.5 & 4.5 \\ 1.5 & 1.5 \end{bmatrix}$ (D) $\begin{bmatrix} 4.5 & 1.5 \\ 1.5 & 4.5 \end{bmatrix}$

Q.77 The h-parameter matrix for this network is

(A) $\begin{bmatrix} -3 & 3 \\ -1 & 0.67 \end{bmatrix}$ (B) $\begin{bmatrix} -3 & -1 \\ 3 & 0.67 \end{bmatrix}$ (C) $\begin{bmatrix} 3 & 3 \\ 1 & 0.67 \end{bmatrix}$ (D) $\begin{bmatrix} 3 & 1 \\ -3 & -0.67 \end{bmatrix}$

Statement for Linked Answer Questions 78 and 79:

In the following network, the switch is closed at $t = 0-$ and the sampling starts from $t = 0$. The sampling frequency is 10 Hz.

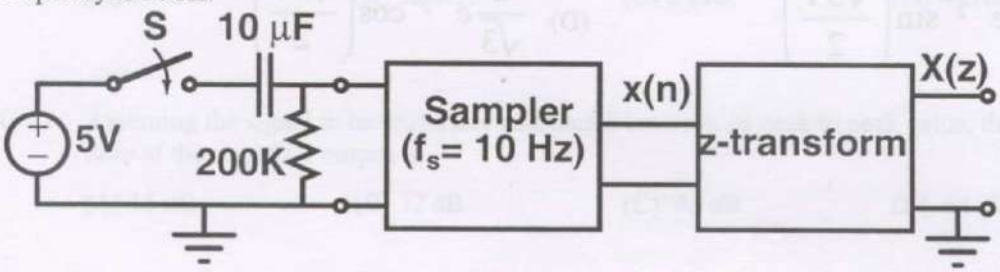

Q.78 The samples $x(n)$ $(n = 0, 1, 2, \cdots\cdots)$ are given by

(A) $5\left(1 - e^{-0.05n}\right)$ (B) $5e^{-0.05n}$ (C) $5\left(1 - e^{-5n}\right)$ (D) $5e^{-5n}$

Q.79 The expression and the region of convergence of the z-transform of the sampled signal are

(A) $\dfrac{5z}{z - e^{-5}}$, $|z| < e^{-5}$ (B) $\dfrac{5z}{z - e^{-0.05}}$, $|z| < e^{-0.05}$

(C) $\dfrac{5z}{z - e^{-0.05}}$, $|z| > e^{-0.05}$ (D) $\dfrac{5z}{z - e^{-5}}$, $|z| > e^{-5}$

Statement for Linked Answer Questions 80 and 81:

In the following transistor circuit, $V_{BE} = 0.7$ V, $r_e = 25$ mV / I_E, and β and all the capacitances are very large.

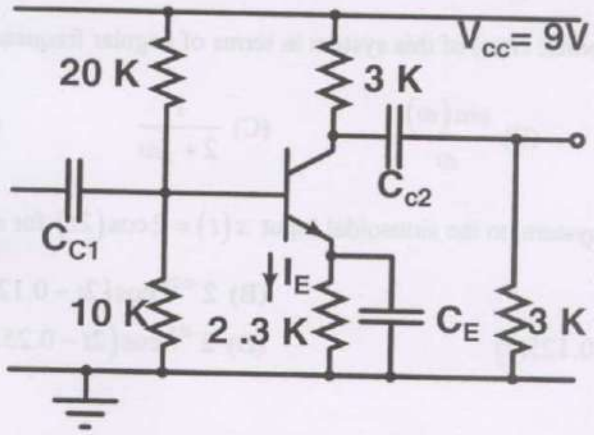

Q.80 The value of DC current I_E is

(A) 1 mA (B) 2 mA (C) 5 mA (D) 10 mA

Q.81 The mid-band voltage gain of the amplifier is approximately

(A) -180 (B) -120 (C) -90 (D) -60

Statement for Linked Answer Questions 82 and 83:

In the following circuit, the comparator output is logic "1" if $V_1 > V_2$ and is logic "0" otherwise. The D/A conversion is done as per the relation

$V_{DAC} = \sum_{n=0}^{3} 2^{n-1} b_n$ Volts, where b_3 (MSB), b_2, b_1 and b_0 (LSB) are the counter outputs.

The counter starts from the clear state.

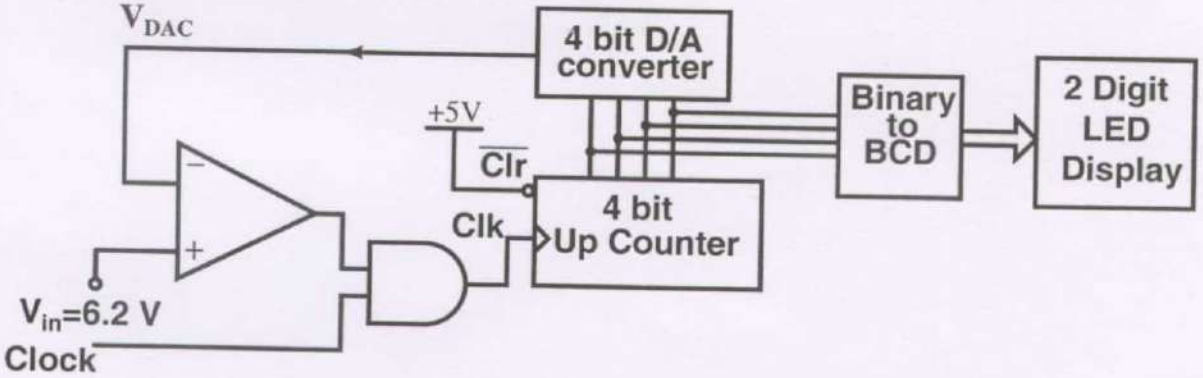

Q.82 The stable reading of the LED displays is

(A) 06 (B) 07 (C) 12 (D) 13

Q.83 The magnitude of the error between V_{DAC} and V_{in} at steady state in volts is

(A) 0.2 (B) 0.3 (C) 0.5 (D) 1.0

Statement for Linked Answer Questions 84 and 85:

The impulse response $h(t)$ of a linear time-invariant continuous time system is given by $h(t) = \exp(-2t)u(t)$, where $u(t)$ denotes the unit step function.

Q.84 The frequency response $H(\omega)$ of this system in terms of angular frequency ω, is given by $H(\omega) =$

(A) $\frac{1}{1+j2\omega}$ (B) $\frac{\sin(\omega)}{\omega}$ (C) $\frac{1}{2+j\omega}$ (D) $\frac{j\omega}{2+j\omega}$

Q.85 The output of this system, to the sinusoidal input $x(t) = 2\cos(2t)$ for all time t, is

(A) 0

(B) $2^{-0.25}\cos(2t - 0.125\pi)$

(C) $2^{-0.5}\cos(2t - 0.125\pi)$

(D) $2^{-0.5}\cos(2t - 0.25\pi)$

END OF THE QUESTION PAPER