SESSION - 1

Graduate Aptitude Test in Engineering

Notations :

1.Options shown in green color and with ✔ icon are correct.

2.Options shown in red color and with ✖ icon are incorrect.

Question Paper Name:	EC: ELECTRONICS AND COMMUNICATION ENGINEERING 31st Jan Shift1
Number of Questions:	65
Total Marks:	100.0

Wrong answer for MCQ will result in negative marks, (-1/3) for 1 mark Questions and (-2/3) for 2 marks Questions.

General Aptitude

Number of Questions:	10
Section Marks:	15.0

Q.1 to Q.5 carry 1 mark each & Q.6 to Q.10 carry 2 marks each.

Question Number : 1 Question Type : MCQ

Choose the most appropriate word from the options given below to complete the following sentence.

The principal presented the chief guest with a _____, as token of appreciation.

(A) momento (B) memento (C) momentum (D) moment

Options :

1. ✖ A
2. ✔ B
3. ✖ C
4. ✖ D

Question Number : 2 Question Type : MCQ

Choose the appropriate word/phrase, out of the four options given below, to complete the following sentence:

Frogs _____.

(A) croak (B) roar (C) hiss (D) patter

Options :

1. ✔ A
2. ✖ B
3. ✖ C
4. ✖ D

Question Number : 3 Question Type : MCQ

Choose the word most similar in meaning to the given word:

Educe

(A) Exert (B) Educate (C) Extract (D) Extend

Options :

1. ✖ A
2. ✖ B
3. ✔ C
4. ✖ D

Question Number : 4 Question Type : MCQ

Operators □, ◊ and ⟶ are defined by: $a \square b = \frac{a-b}{a+b}$; $a \lozenge b = \frac{a+b}{a-b}$; $a \longrightarrow b = ab$.

Find the value of $(66 \square 6) \longrightarrow (66 \lozenge 6)$.

(A) −2 (B) −1 (C) 1 (D) 2

Options :

1. ✖ A
2. ✖ B
3. ✔ C
4. ✖ D

Question Number : 5 Question Type : MCQ

If $\log_x (5/7) = -1/3$, then the value of x is

(A) 343/125
(B) 125/343
(C) −25/49
(D) −49/25

Options :

1. ✔ A
2. ✖ B
3. ✖ C
4. ✖ D

Question Number : 6 Question Type : MCQ

The following question presents a sentence, part of which is underlined. Beneath the sentence you find four ways of phrasing the underlined part. Following the requirements of the standard written English, select the answer that produces the most effective sentence.

Tuberculosis, together with its effects, <u>ranks one of the leading causes of death</u> in India.

(A) ranks as one of the leading causes of death
(B) rank as one of the leading causes of death
(C) has the rank of one of the leading causes of death
(D) are one of the leading causes of death

Options :

1. ✔ A
2. ✖ B
3. ✖ C
4. ✖ D

Question Number : 7 Question Type : MCQ

Read the following paragraph and choose the correct statement.

Climate change has reduced human security and threatened human well being. An ignored reality of human progress is that human security largely depends upon environmental security. But on the contrary, human progress seems contradictory to environmental security. To keep up both at the required level is a challenge to be addressed by one and all. One of the ways to curb the climate change may be suitable scientific innovations, while the other may be the Gandhian perspective on small scale progress with focus on sustainability.

(A) Human progress and security are positively associated with environmental security.
(B) Human progress is contradictory to environmental security.
(C) Human security is contradictory to environmental security.
(D) Human progress depends upon environmental security.

Options :

1. ✖ A
2. ✔ B
3. ✖ C
4. ✖ D

Question Number : 8 Question Type : NAT

Fill in the missing value

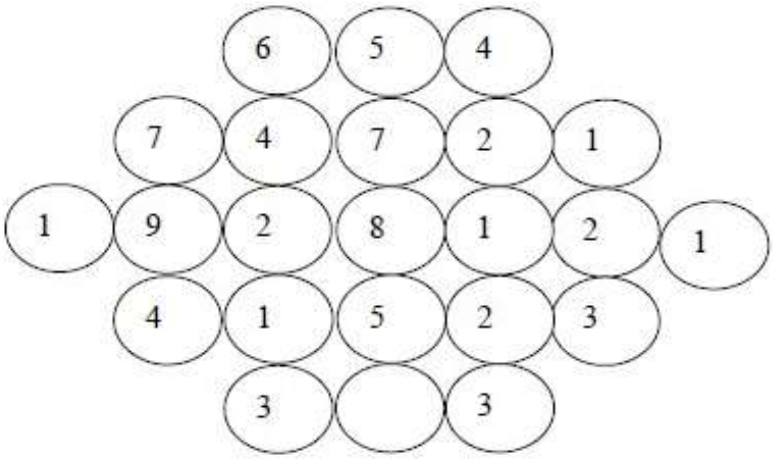

Correct Answer :

3

Question Number : 9 Question Type : MCQ

A cube of side 3 units is formed using a set of smaller cubes of side 1 unit. Find the proportion of the number of faces of the smaller cubes visible to those which are NOT visible.

(A) 1 : 4 (B) 1 : 3 (C) 1 : 2 (D) 2 : 3

Options :

1. ✖ A
2. ✖ B
3. ✔ C
4. ✖ D

Question Number : 10 Question Type : MCQ

Humpty Dumpty sits on a wall every day while having lunch. The wall sometimes breaks. A person sitting on the wall falls if the wall breaks.

Which one of the statements below is logically valid and can be inferred from the above sentences?

(A) Humpty Dumpty always falls while having lunch
(B) Humpty Dumpty does not fall sometimes while having lunch
(C) Humpty Dumpty never falls during dinner
(D) When Humpty Dumpty does not sit on the wall, the wall does not break

Options :

1. ✖ A
2. ✔ B
3. ✖ C
4. ✖ D

Electronics and Communication Engineering

Number of Questions:	55
Section Marks:	85.0

Q.11 to Q.35 carry 1 mark each & Q.36 to Q.65 carry 2 marks each.

Question Number : 11 Question Type : NAT

Consider a system of linear equations:

$$x - 2y + 3z = -1,$$
$$x - 3y + 4z = 1, \text{ and}$$
$$-2x + 4y - 6z = k.$$

The value of k for which the system has infinitely many solutions is _____.

Correct Answer:

2

Question Number : 12 Question Type : MCQ

A function $f(x)=1-x^2+x^3$ is defined in the closed interval $[-1,1]$. The value of x, in the open interval $(-1,1)$ for which the mean value theorem is satisfied, is

(A) $-1/2$ (B) $-1/3$ (C) $1/3$ (D) $1/2$

Options :

1. ✖ A
2. ✔ B
3. ✖ C
4. ✖ D

Question Number : 13 Question Type : MCQ

Suppose A and B are two independent events with probabilities $P(A) \neq 0$ and $P(B) \neq 0$. Let $\overline{A}$ and $\overline{B}$ be their complements. Which one of the following statements is FALSE?

(A) $P(A \cap B) = P(A)P(B)$
(B) $P(A|B) = P(A)$
(C) $P(A \cup B) = P(A) + P(B)$
(D) $P(\overline{A} \cap \overline{B}) = P(\overline{A})P(\overline{B})$

Options :

1. ✖ A
2. ✖ B
3. ✔ C
4. ✖ D

Question Number : 14 Question Type : MCQ

Let $z = x + iy$ be a complex variable. Consider that contour integration is performed along the unit circle in anticlockwise direction. Which one of the following statements is **NOT TRUE**?

(A) The residue of $\frac{z}{z^2-1}$ at $z=1$ is $1/2$

(B) $\oint_C z^2 dz = 0$

(C) $\frac{1}{2\pi i}\oint_C \frac{1}{z} dz = 1$

(D) $\overline{z}$ (complex conjugate of z) is an analytical function

Options :

1. ✖ A
2. ✖ B
3. ✖ C
4. ✔ D

Question Number : 15 Question Type : NAT

The value of p such that the vector $\begin{bmatrix}1\\2\\3\end{bmatrix}$ is an eigenvector of the matrix $\begin{bmatrix}4 & 1 & 2\\ p & 2 & 1\\ 14 & -4 & 10\end{bmatrix}$ is _____.

Correct Answer :
16.5 to 17.5

Question Number : 16 Question Type : NAT

In the circuit shown, at resonance, the amplitude of the sinusoidal voltage (in Volts) across the capacitor is _____.

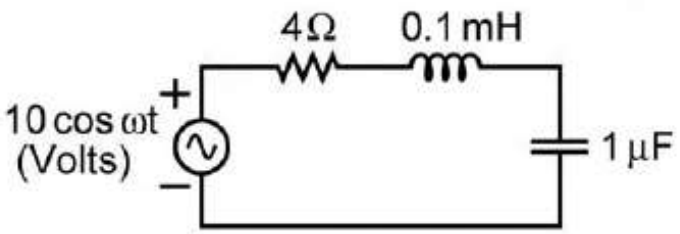

Correct Answer:
24 to 26

Question Number : 17 Question Type : NAT

In the network shown in the figure, all resistors are identical with R = 300 Ω. The resistance R_{ab} (in Ω) of the network is _____.

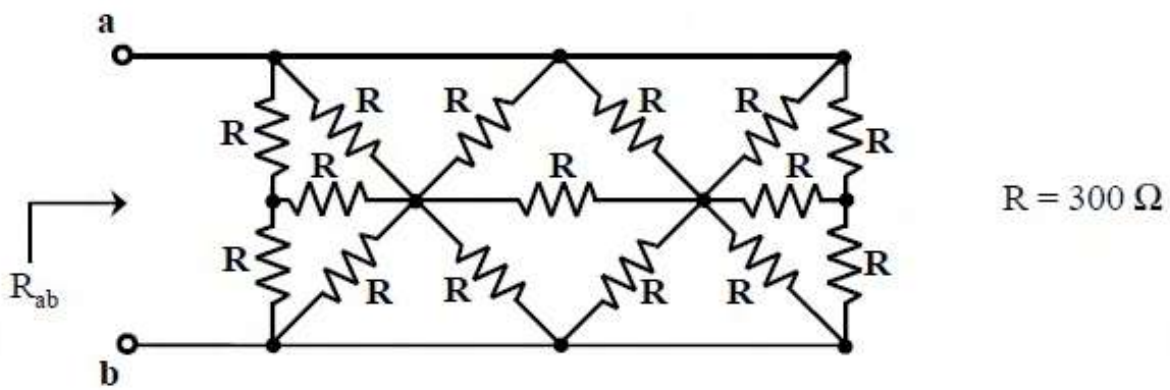

Correct Answer :
99.5 to 100.5

Question Number : 18 Question Type : MCQ

In the given circuit, the values of V_1 and V_2 respectively are

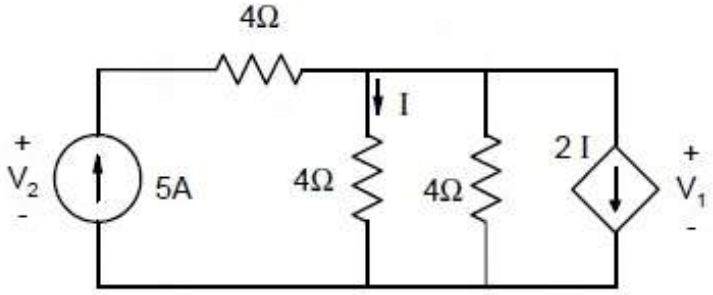

(A) 5 V, 25 V (B) 10 V, 30 V (C) 15 V, 35 V (D) 0 V, 20 V

Options :

1. ✔ A
2. ✖ B
3. ✖ C
4. ✖ D

Question Number : 19 Question Type : MCQ

A region of negative differential resistance is observed in the current voltage characteristics of a silicon PN junction if

(A) both the P-region and the N-region are heavily doped
(B) the N-region is heavily doped compared to the P-region
(C) the P-region is heavily doped compared to the N-region
(D) an intrinsic silicon region is inserted between the P-region and the N-region

Options :

1. ✔ A
2. ✖ B
3. ✖ C
4. ✖ D

Question Number : 20 Question Type : NAT

A silicon sample is uniformly doped with donor type impurities with a concentration of 10^{16} /cm^3. The electron and hole mobilities in the sample are 1200 cm^2/V-s and 400 cm^2/V-s respectively. Assume complete ionization of impurities. The charge of an electron is 1.6×10^{-19} C. The resistivity of the sample (in Ω-cm) is _____.

Correct Answer :

0.50 to 0.54

Question Number : 21 Question Type : MCQ

For the circuit with ideal diodes shown in the figure, the shape of the output (v_{out}) for the given sine wave input (v_{in}) will be

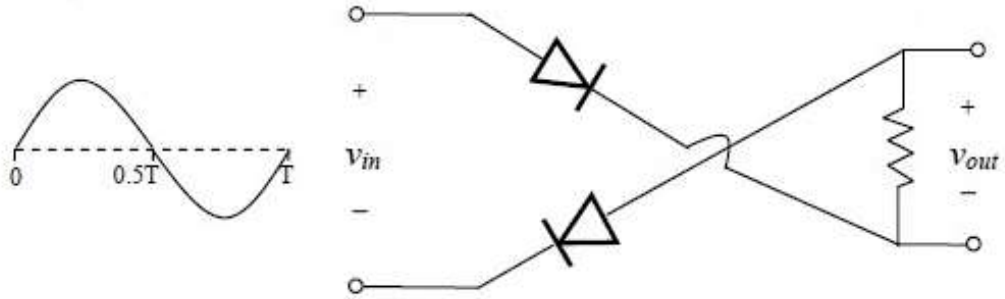

(A)

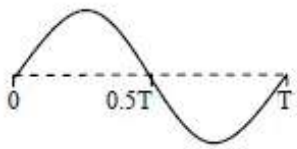

(B)

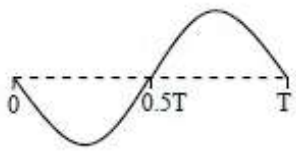

(C)

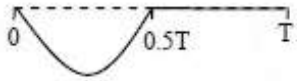

(D)

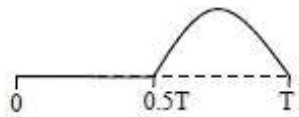

Options :

1. ✖ A
2. ✖ B
3. ✔ C
4. ✖ D

Question Number : 22 Question Type : NAT

In the circuit shown below, the Zener diode is ideal and the Zener voltage is 6 V. The output voltage V_o (in volts) is_____.

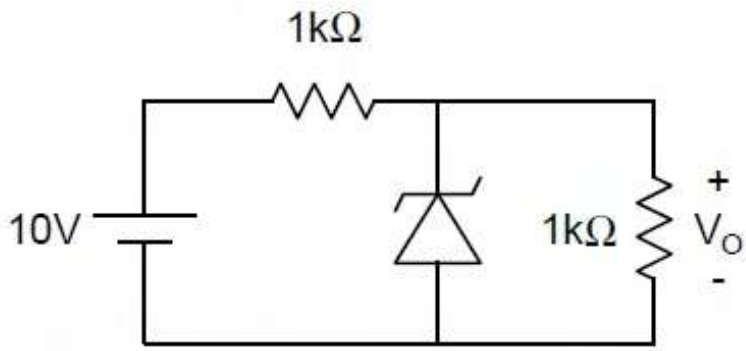

Correct Answer :

5

Question Number : 23 Question Type : MCQ

In the circuit shown, the switch SW is thrown from position A to position B at time $t = 0$. The energy (in μJ) taken from the 3 V source to charge the 0.1 μF capacitor from 0 V to 3 V is

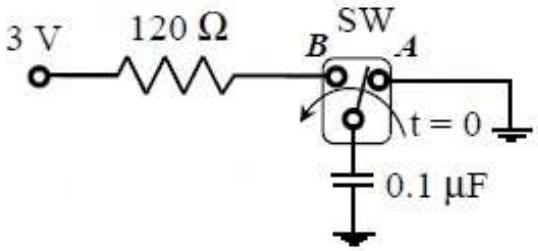

(A) 0.3 (B) 0.45 (C) 0.9 (D) 3

Options :

1. ✖ A
2. ✖ B
3. ✔ C
4. ✖ D

Question Number : 24 Question Type : MCQ

In an 8085 microprocessor, the shift registers which store the result of an addition and the overflow bit are, respectively

(A) B and F
(B) A and F
(C) H and F
(D) A and C

Options :

1. ✖ A
2. ✔ B
3. ✖ C
4. ✖ D

Question Number : 25 Question Type : NAT

A 16 Kb (=16,384 bit) memory array is designed as a square with an aspect ratio of one (number of rows is equal to the number of columns). The minimum number of address lines needed for the row decoder is _____.

Correct Answer:

7

Question Number : 26 Question Type : NAT

Consider a four bit D to A converter. The analog value corresponding to digital signals of values 0000 and 0001 are 0 V and 0.0625 V respectively. The analog value (in Volts) corresponding to the digital signal 1111 is _____.

Correct Answer :

0.93 to 0.94

Question Number : 27 Question Type : MCQ

The result of the convolution $x(-t) * \delta(-t - t_0)$ is

(A) $x(t + t_0)$ (B) $x(t - t_0)$ (C) $x(-t + t_0)$ (D) $x(-t - t_0)$

Options :

1. ✖ A
2. ✖ B
3. ✖ C
4. ✔ D

Question Number : 28 Question Type : NAT

The waveform of a periodic signal $x(t)$ is shown in the figure.

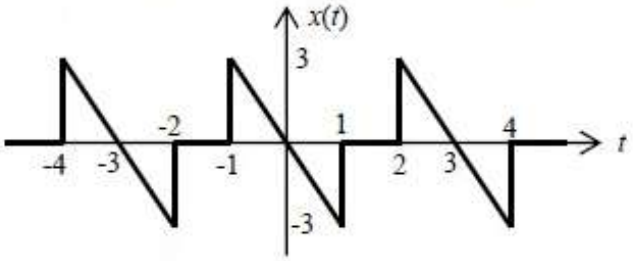

A signal $g(t)$ is defined by $g(t) = x\left(\frac{t-1}{2}\right)$. The average power of $g(t)$ is _____.

Correct Answer :

2

Question Number : 29 Question Type : MCQ

Negative feedback in a closed-loop control system **DOES NOT**

(A) reduce the overall gain (B) reduce bandwidth

(C) improve disturbance rejection (D) reduce sensitivity to parameter variation

Options :

1. ✖ A
2. ✔ B

3. ✖ C

4. ✖ D

Question Number : 30 Question Type : NAT

A unity negative feedback system has the open-loop transfer function $G(s) = \frac{K}{s(s+1)(s+3)}$. The value of the gain K (>0) at which the root locus crosses the imaginary axis is _____.

Correct Answer :

12

Question Number : 31 Question Type : MCQ

The polar plot of the transfer function $G(s) = \frac{10(s+1)}{s+10}$ for $0 \leq \omega < \infty$ will be in the

(A) first quadrant
(B) second quadrant
(C) third quadrant
(D) fourth quadrant

Options :

1. ✔ A

2. ✖ B

3. ✖ C

4. ✖ D

Question Number : 32 Question Type : MCQ

A sinusoidal signal of 2 kHz frequency is applied to a delta modulator. The sampling rate and step-size Δ of the delta modulator are $20,000$ samples per second and 0.1 V, respectively. To prevent slope overload, the maximum amplitude of the sinusoidal signal (in Volts) is

(A) $\frac{1}{2\pi}$

(B) $\frac{1}{\pi}$

(C) $\frac{2}{\pi}$

(D) π

Options :

1. ✔ A

2. ✖ B

3. ✖ C

4. ✖ D

Question Number : 33 Question Type : MCQ

Consider the signal $s(t) = m(t)\cos(2\pi f_c t) + \hat{m}(t)\sin(2\pi f_c t)$ where $\hat{m}(t)$ denotes the Hilbert transform of $m(t)$ and the bandwidth of $m(t)$ is very small compared to f_c. The signal $s(t)$ is a

(A) high-pass signal
(B) low-pass signal
(C) band-pass signal
(D) double sideband suppressed carrier signal

Options :

1. ✖ A
2. ✖ B
3. ✔ C
4. ✖ D

Question Number : 34 Question Type : MCQ

Consider a straight, infinitely long, current carrying conductor lying on the z-axis. Which one of the following plots (in linear scale) qualitatively represents the dependence of H_ϕ on r, where H_ϕ is the magnitude of the azimuthal component of magnetic field outside the conductor and r is the radial distance from the conductor?

(A)

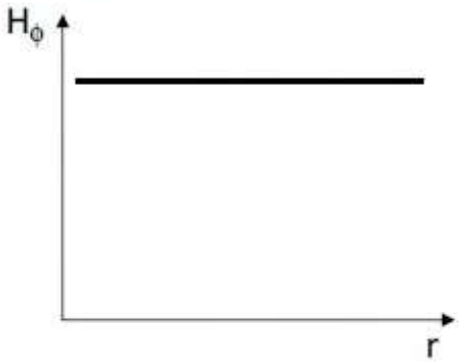

(B)

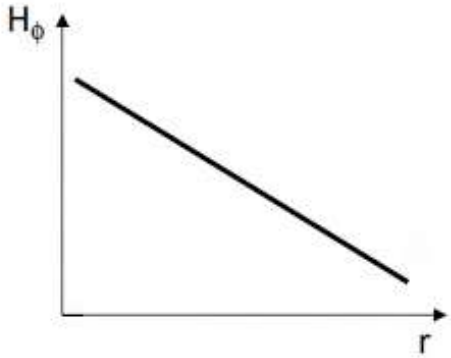

(C)

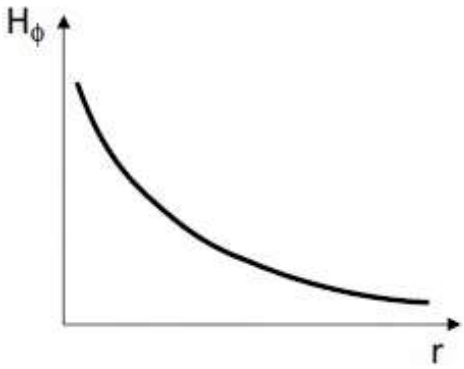

(D)

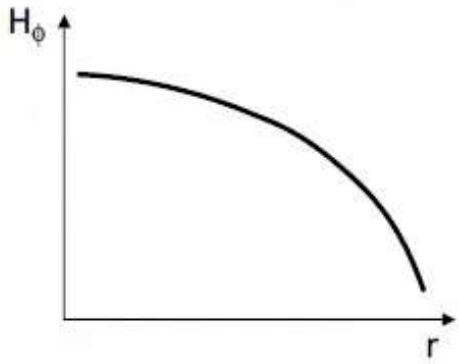

Options :

1. ✖ A
2. ✖ B
3. ✔ C
4. ✖ D

Question Number : 35 Question Type : NAT

The electric field component of a plane wave traveling in a lossless dielectric medium is given by $\vec{E}(z,t) = \hat{a}_y 2\cos\left(10^8 t - \frac{z}{\sqrt{2}}\right)$ V/m. The wavelength (in m) for the wave is _____.

Correct Answer :

8.85 to 8.92

Question Number : 36 Question Type : MCQ

The solution of the differential equation $\frac{d^2y}{dt^2} + 2\frac{dy}{dt} + y = 0$ with $y(0) = y'(0) = 1$ is

(A) $(2-t)e^{t}$

(B) $(1+2t)e^{-t}$

(C) $(2+t)e^{-t}$

(D) $(1-2t)e^{t}$

Options :

1. ✖ A
2. ✔ B
3. ✖ C
4. ✖ D

Question Number : 37 Question Type : MCQ

A vector $\vec{P}$ is given by $\vec{P} = x^3y\,\vec{a}_x - x^2y^2\,\vec{a}_y - x^2yz\,\vec{a}_z$. Which one of the following statements is **TRUE**?

(A) $\vec{P}$ is solenoidal, but not irrotational

(B) $\vec{P}$ is irrotational, but not solenoidal

(C) $\vec{P}$ is neither solenoidal nor irrotational

(D) $\vec{P}$ is both solenoidal and irrotational

Options :

1. ✔ A
2. ✖ B
3. ✖ C
4. ✖ D

Question Number : 38 Question Type : MCQ

Which one of the following graphs describes the function $f(x) = e^{-x}(x^2 + x + 1)$?

(A)

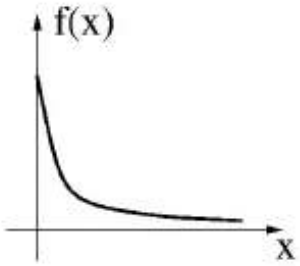

(B)

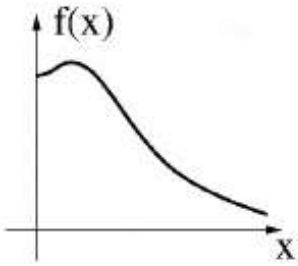

(C)

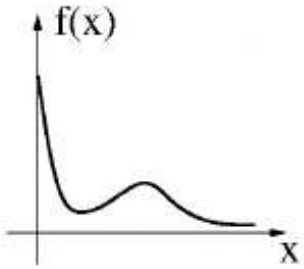

(D)

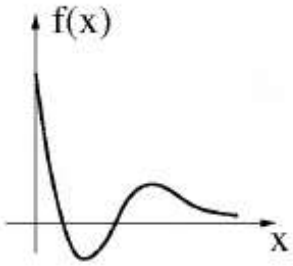

Options :

1. ✖ A
2. ✔ B
3. ✖ C
4. ✖ D

Question Number : 39 Question Type : NAT

The maximum area (in square units) of a rectangle whose vertices lie on the ellipse $x^2 + 4y^2 = 1$ is _____.

Correct Answer:

0.95 to 1.05

Question Number : 40 Question Type : MCQ

The damping ratio of a series RLC circuit can be expressed as

(A) $\frac{R^2C}{2L}$ (B) $\frac{2L}{R^2C}$ (C) $\frac{R}{2}\sqrt{\frac{C}{L}}$ (D) $\frac{2}{R}\sqrt{\frac{L}{C}}$

Options :

1. ✖ A
2. ✖ B
3. ✔ C
4. ✖ D

Question Number : 41 Question Type : NAT

In the circuit shown, switch SW is closed at $t = 0$. Assuming zero initial conditions, the value of $v_c(t)$ (in Volts) at $t = 1$ sec is _____.

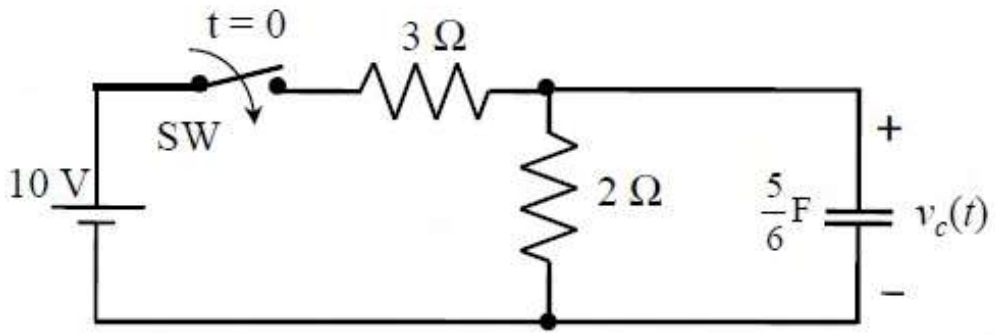

Correct Answer:
2.48 to 2.58

Question Number : 42 Question Type : NAT

In the given circuit, the maximum power (in Watts) that can be transferred to the load R_L is _____.

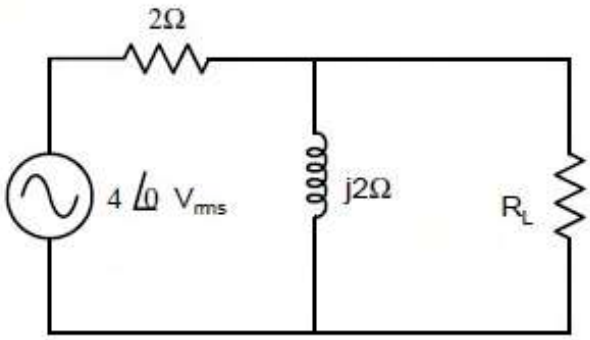

Correct Answer:
1.6 to 1.7

Question Number : 43 Question Type : NAT

The built-in potential of an abrupt p-n junction is 0.75 V. If its junction capacitance (C_J) at a reverse bias (V_R) of 1.25 V is 5 pF, the value of C_J (in pF) when $V_R = 7.25$ V is _____.

Correct Answer :
2.4 to 2.6

Question Number : 44 Question Type : NAT

A MOSFET in saturation has a drain current of 1 mA for $V_{DS} = 0.5$ V. If the channel length modulation coefficient is 0.05 V^{-1}, the output resistance (in kΩ) of the MOSFET is _____.

Correct Answer :

19 to 21

Question Number : 45 Question Type : NAT

For a silicon diode with long P and N regions, the accepter and donor impurity concentrations are 1×10^{17} cm^{-3} and 1×10^{15} cm^{-3}, respectively. The lifetimes of electrons in P region and holes in N region are both 100 μs. The electron and hole diffusion coefficients are 49 cm^2/s and 36 cm^2/s, respectively. Assume kT/q = 26 mV, the intrinsic carrier concentration is 1×10^{10} cm^{-3}, and $q = 1.6 \times 10^{-19}$ C. When a forward voltage of 208 mV is applied across the diode, the hole current density (in nA/cm^2) injected from P region to N region is _____.

Correct Answer :

28 to 30

Question Number : 46 Question Type : MCQ

The Boolean expression $F(X,Y,Z) = \bar{X}Y\bar{Z} + X\bar{Y}\bar{Z} + XY\bar{Z} + XYZ$ converted into the canonical product of sum (POS) form is

(A) $(X+Y+Z)(X+Y+\bar{Z})(X+\bar{Y}+\bar{Z})(\bar{X}+Y+\bar{Z})$

(B) $(X+\bar{Y}+Z)(\bar{X}+Y+\bar{Z})(\bar{X}+\bar{Y}+Z)(\bar{X}+\bar{Y}+\bar{Z})$

(C) $(X+Y+Z)(\bar{X}+Y+\bar{Z})(X+\bar{Y}+Z)(\bar{X}+\bar{Y}+\bar{Z})$

(D) $(X+\bar{Y}+\bar{Z})(\bar{X}+Y+Z)(\bar{X}+\bar{Y}+Z)(X+Y+Z)$

Options :

1. ✔ A
2. ✖ B
3. ✖ C
4. ✖ D

Question Number : 47 Question Type : NAT

All the logic gates shown in the figure have a propagation delay of 20 ns. Let A = C = 0 and B = 1 until time t = 0. At t = 0, all the inputs flip (i.e., A = C = 1 and B = 0) and remain in that state. For t > 0, output Z = 1 for a duration (in ns) of .

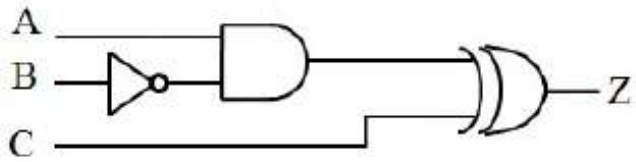

Correct Answer :

40

Question Number : 48 Question Type : MCQ

A 3-input majority gate is defined by the logic function $M(a,b,c) = ab + bc + ca$. Which one of the following gates is represented by the function $M(\overline{M(a,b,c)}, M(a,b,\overline{c}), c)$?

(A) 3-input NAND gate
(B) 3-input XOR gate
(C) 3-input NOR gate
(D) 3-input XNOR gate

Options :

1. ✖ A
2. ✔ B
3. ✖ C
4. ✖ D

Question Number : 49 Question Type : MCQ

For the NMOSFET in the circuit shown, the threshold voltage is V_{th}, where $V_{th} > 0$. The source voltage V_{SS} is varied from 0 to V_{DD}. Neglecting the channel length modulation, the drain current I_D as a function of V_{SS} is represented by

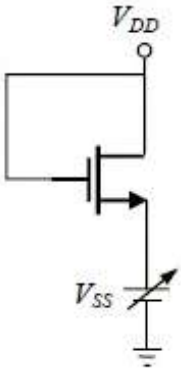

(A)

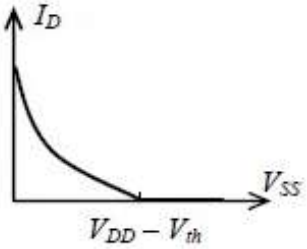

(B)

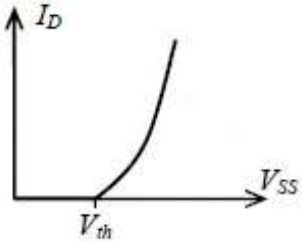

(C)

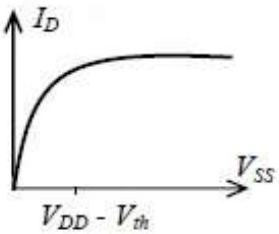

(D)

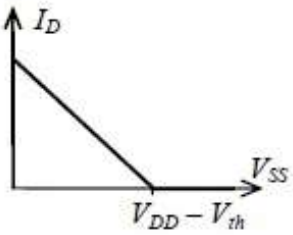

Options :

1. ✔ A
2. ✖ B
3. ✖ C
4. ✖ D

Question Number : 50 Question Type : NAT

In the circuit shown, assume that the opamp is ideal. The bridge output voltage V_0 (in mV) for $\delta = 0.05$ is _____.

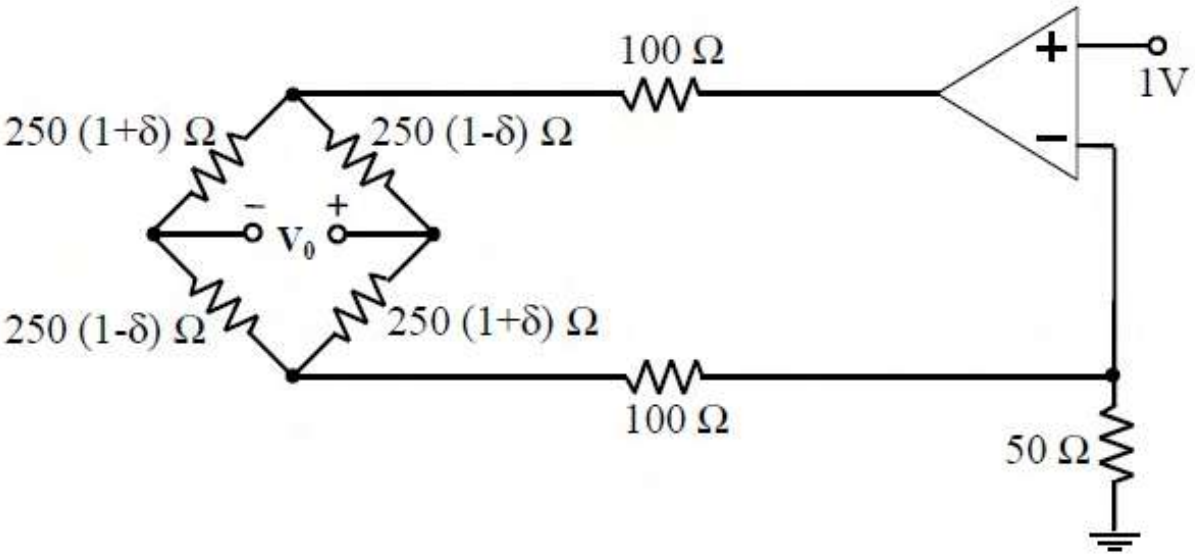

Correct Answer :

249 to 251

Question Number : 51 Question Type : MCQ

The circuit shown in the figure has an ideal opamp. The oscillation frequency and the condition to sustain the oscillations, respectively, are

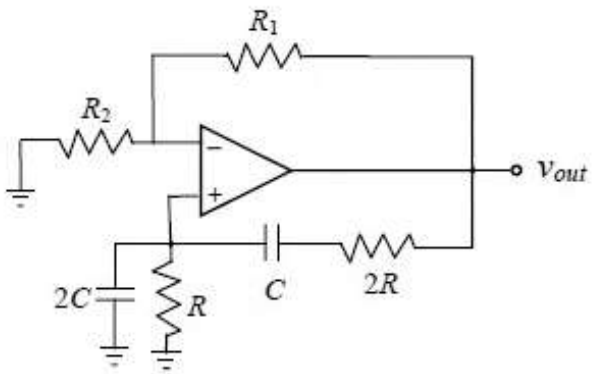

(A) $\frac{1}{CR}$ and $R_1 = R_2$

(B) $\frac{1}{CR}$ and $R_1 = 4R_2$

(C) $\frac{1}{2CR}$ and $R_1 = R_2$

(D) $\frac{1}{2CR}$ and $R_1 = 4R_2$

Options :

1. ✖ A
2. ✖ B
3. ✖ C
4. ✔ D

Question Number : 52 Question Type : NAT

In the circuit shown, $I_1 = 80$ mA and $I_2 = 4$ mA. Transistors T_1 and T_2 are identical. Assume that the thermal voltage V_T is 26 mV at 27 °C. At 50 °C, the value of the voltage $V_{12} = V_1 - V_2$ (in mV) is _____.

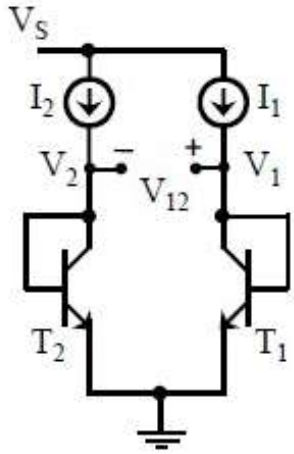

Correct Answer :

83.5 to 84.0

Question Number : 53 Question Type : MCQ

Two sequences $[a, b, c]$ and $[A, B, C]$ are related as,

$$\begin{bmatrix} A \\ B \\ C \end{bmatrix} = \begin{bmatrix} 1 & 1 & 1 \\ 1 & W_3^{-1} & W_3^{-2} \\ 1 & W_3^{-2} & W_3^{-4} \end{bmatrix} \begin{bmatrix} a \\ b \\ c \end{bmatrix} \quad \text{where } W_3 = e^{j\frac{2\pi}{3}}.$$

If another sequence $[p, q, r]$ is derived as,

$$\begin{bmatrix} p \\ q \\ r \end{bmatrix} = \begin{bmatrix} 1 & 1 & 1 \\ 1 & W_3^{1} & W_3^{2} \\ 1 & W_3^{2} & W_3^{4} \end{bmatrix} \begin{bmatrix} 1 & 0 & 0 \\ 0 & W_3^{2} & 0 \\ 0 & 0 & W_3^{4} \end{bmatrix} \begin{bmatrix} A/3 \\ B/3 \\ C/3 \end{bmatrix},$$

then the relationship between the sequences $[p, q, r]$ and $[a, b, c]$ is

(A) $[p, q, r] = [b, a, c]$

(B) $[p, q, r] = [b, c, a]$

(C) $[p, q, r] = [c, a, b]$

(D) $[p, q, r] = [c, b, a]$

Options :

1. ✖ A
2. ✖ B
3. ✔ C
4. ✖ D

Question Number : 54 Question Type : MCQ

For the discrete-time system shown in the figure, the poles of the system transfer function are located at

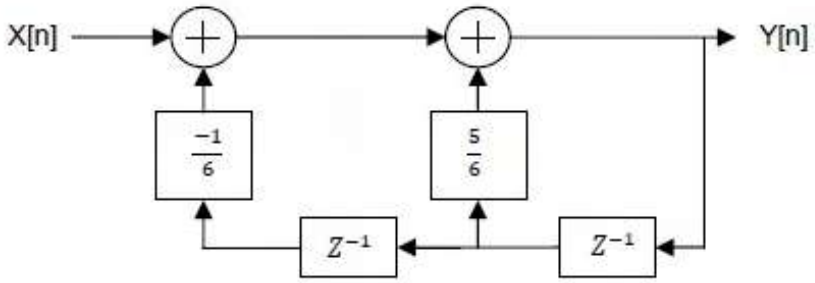

(A) 2, 3 (B) $\frac{1}{2}$, 3 (C) $\frac{1}{2}$, $\frac{1}{3}$ (D) 2, $\frac{1}{3}$

Options :

1. ✖ A
2. ✖ B
3. ✔ C
4. ✖ D

Question Number : 55 Question Type : MCQ

The pole-zero diagram of a causal and stable discrete-time system is shown in the figure. The zero at the origin has multiplicity 4. The impulse response of the system is $h[n]$. If $h[0] = 1$, we can conclude

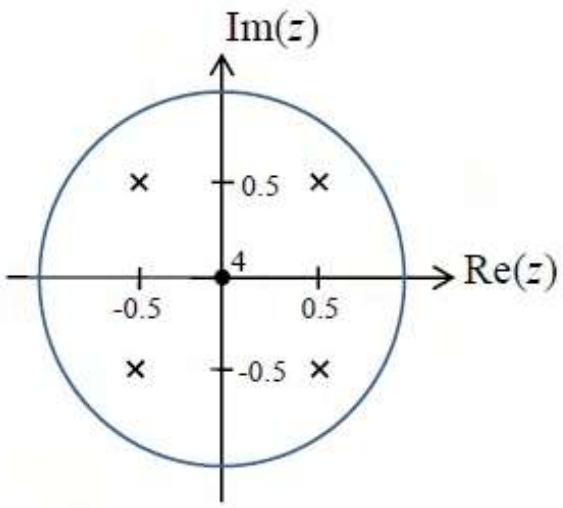

(A) $h[n]$ is real for all n
(B) $h[n]$ is purely imaginary for all n
(C) $h[n]$ is real for only even n
(D) $h[n]$ is purely imaginary for only odd n

Options :

1. ✔ A
2. ✖ B
3. ✖ C
4. ✖ D

Question Number : 56 Question Type : NAT

The open-loop transfer function of a plant in a unity feedback configuration is given as $G(s)=\frac{K(s+4)}{(s+8)(s^2-9)}$. The value of the gain $K(>0)$ for which $-1+j2$ lies on the root locus is _____.

Correct Answer :
25 to 26

Question Number : 57 Question Type : NAT

A lead compensator network includes a parallel combination of R and C in the feed-forward path. If the transfer function of the compensator is $G_c(s)=\frac{s+2}{s+4}$, the value of RC is _____.

Correct Answer :
0.5

Question Number : 58 Question Type : MCQ

A plant transfer function is given as $G(s)=\left(K_P+\frac{K_I}{s}\right)\frac{1}{s(s+2)}$. When the plant operates in a unity feedback configuration, the condition for the stability of the closed loop system is

(A) $K_P>\frac{K_I}{2}>0$ (B) $2K_I>K_P>0$ (C) $2K_I<K_P$ (D) $2K_I>K_P$

Options :
1. ✔ A
2. ✖ B
3. ✖ C
4. ✖ D

Question Number : 59 Question Type : NAT

The input X to the Binary Symmetric Channel (BSC) shown in the figure is '1' with probability 0.8. The cross-over probability is 1/7. If the received bit $Y = 0$, the conditional probability that '1' was transmitted is _____.

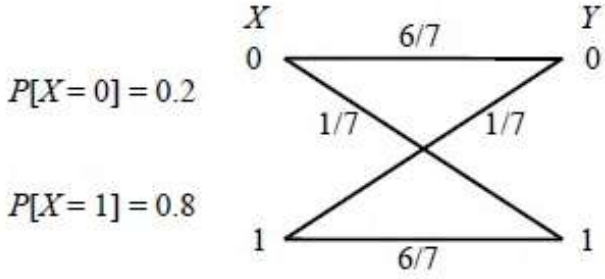

Correct Answer :
0.39 to 0.41

Question Number : 60 Question Type : NAT

The transmitted signal in a GSM system is of 200 kHz bandwidth and 8 users share a common bandwidth using TDMA. If at a given time 12 users are talking in a cell, the total bandwidth of the signal received by the base station of the cell will be at least (in kHz) _____.

Correct Answer:
400

Question Number : 61 Question Type : NAT

In the system shown in Figure (a), $m(t)$ is a low-pass signal with bandwidth W Hz. The frequency response of the band-pass filter $H(f)$ is shown in Figure (b). If it is desired that the output signal $z(t) = 10x(t)$, the maximum value of W (in Hz) should be strictly less than _____.

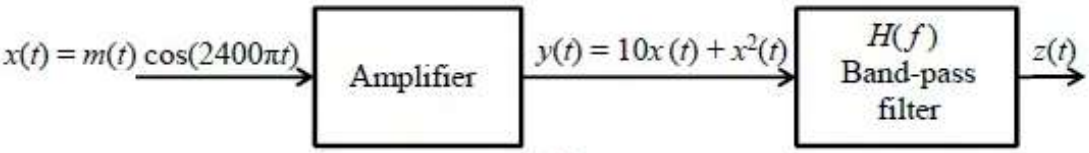

(a)

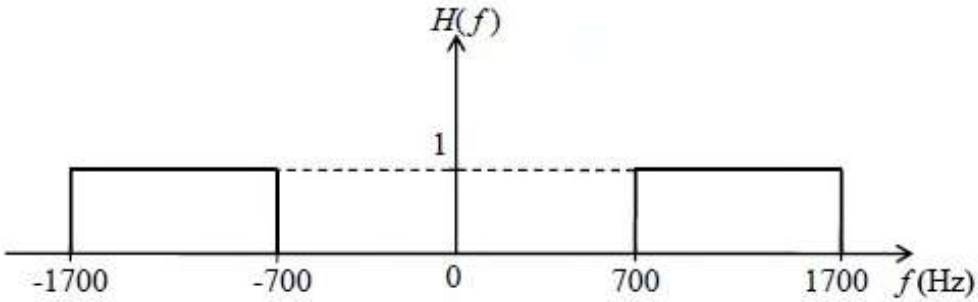

(b)

Correct Answer :
349 to 350

Question Number : 62 Question Type : MCQ

A source emits bit 0 with probability $\frac{1}{3}$ and bit 1 with probability $\frac{2}{3}$. The emitted bits are communicated to the receiver. The receiver decides for either 0 or 1 based on the received value R. It is given that the conditional density functions of R are as

$$f_{R|0}(r) = \begin{cases} \frac{1}{4}, & -3 \le x \le 1, \\ 0, & \text{otherwise,} \end{cases} \quad \text{and} \quad f_{R|1}(r) = \begin{cases} \frac{1}{6}, & -1 \le x \le 5, \\ 0, & \text{otherwise.} \end{cases}$$

The minimum decision error probability is

(A) 0 (B) 1/12 (C) 1/9 (D) 1/6

Options :
1. ✖ A
2. ✖ B
3. ✖ C
4. ✔ D

Question Number : 63 Question Type : MCQ

The longitudinal component of the magnetic field inside an air-filled rectangular waveguide made of a perfect electric conductor is given by the following expression

$$H_z(x, y, z, t) = 0.1 \cos(25\pi x) \cos(30.3\,\pi y) \cos(12\pi \times 10^9 t - \beta z) \quad (A/m)$$

The cross-sectional dimensions of the waveguide are given as $a = 0.08\ m$ and $b = 0.033\ m$. The mode of propagation inside the waveguide is

(A) TM_{12} (B) TM_{21}
(C) TE_{21} (D) TE_{12}

Options :
1. ✖ A
2. ✖ B
3. ✔ C
4. ✖ D

Question Number : 64 Question Type : NAT

The electric field intensity of a plane wave traveling in free space is given by the following expression

$$\mathbf{E}(x,t) = \mathbf{a}_y\, 24\,\pi\, \cos(\omega t - k_0 x) \quad (\text{V/m})$$

In this field, consider a square area 10 cm x 10 cm on a plane $x + y = 1$. The total time-averaged power (in mW) passing through the square area is _____.

Correct Answer :

53 to 54

Question Number : 65 Question Type : NAT

Consider a uniform plane wave with amplitude (E_0) of 10 V/m and 1.1 GHz frequency travelling in air, and incident normally on a dielectric medium with complex relative permittivity (ε_r) and permeability (μ_r) as shown in the figure.

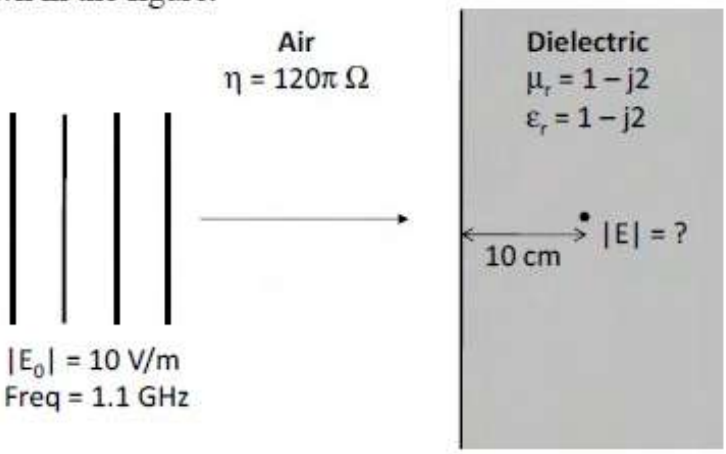

The magnitude of the transmitted electric field component (in V/m) after it has travelled a distance of 10 cm inside the dielectric region is _____.

Correct Answer :

0.08 to 0.12

SESSION - 2

Graduate Aptitude Test in Engineering

Notations :

1.Options shown in green color and with ✔ icon are correct.

2.Options shown in red color and with ✖ icon are incorrect.

Question Paper Name: EC: ELECTRONICS AND COMMUNICATION ENGINEERING 31st Jan Shift2
Number of Questions: 65
Total Marks: 100.0

Wrong answer for MCQ will result in negative marks, (-1/3) for 1 mark Questions and (-2/3) for 2 marks Questions.

General Aptitude

Number of Questions: 10
Section Marks: 15.0

Q.1 to Q.5 carry 1 mark each & Q.6 to Q.10 carry 2 marks each.

Question Number : 1 Question Type : MCQ

Choose the appropriate word/phrase, out of the four options given below, to complete the following sentence:

Dhoni, as well as the other team members of Indian team, _____present on the occasion.

(A) were (B) was (C) has (D) have

Options :

1. ✖ A
2. ✔ B
3. ✖ C
4. ✖ D

Question Number : 2 Question Type : MCQ

Choose the word most similar in meaning to the given word:

Awkward

(A) Inept (B) Graceful (C) Suitable (D) Dreadful

Options :

1. ✔ A
2. ✖ B
3. ✖ C
4. ✖ D

Question Number : 3 Question Type : MCQ

What is the adverb for the given word below?

Misogynous

(A) Misogynousness (B) Misogynity (C) Misogynously (D) Misogynous

Options :

1. ✖ A
2. ✖ B
3. ✔ C
4. ✖ D

Question Number : 4 Question Type : MCQ

An electric bus has onboard instruments that report the total electricity consumed since the start of the trip as well as the total distance covered. During a single day of operation, the bus travels on stretches M, N, O, and P, in that order. The cumulative distances travelled and the corresponding electricity consumption are shown in the Table below:

Stretch	Cumulative distance (km)	Electricity used (kWh)
M	20	12
N	45	25
O	75	45
P	100	57

The stretch where the electricity consumption per km is minimum is

(A) M (B) N (C) O (D) P

Options :

1. ✖ A
2. ✖ B
3. ✖ C
4. ✔ D

Question Number : 5 Question Type : MCQ

Ram and Ramesh appeared in an interview for two vacancies in the same department. The probability of Ram's selection is 1/6 and that of Ramesh is 1/8. What is the probability that only one of them will be selected?

(A) 47/48
(B) 1/4
(C) 13/48
(D) 35/48

Options :

1. ✖ A
2. ✔ B
3. ✖ C
4. ✖ D

Question Number : 6 Question Type : MCQ

In the following sentence certain parts are underlined and marked P, Q, and R. One of the parts may contain certain error or may not be acceptable in standard written communication. Select the part containing an error. Choose D as your answer if there is no error.

The student corrected all the errors (P) that the instructor marked (Q) on the answer book (R).

(A) P (B) Q (C) R (D) No Error

Options :

1. ✖ A
2. ✔ B
3. ✖ C
4. ✖ D

Question Number : 7 Question Type : MCQ

Given below are two statements followed by two conclusions. Assuming these statements to be true, decide which one logically follows.

Statements:

I. All film stars are playback singers.
II. All film directors are film stars.

Conclusions:

I. All film directors are playback singers.
II. Some film stars are film directors.

(A) Only conclusion I follows.
(B) Only conclusion II follows.
(C) Neither conclusion I nor II follows.
(D) Both conclusions I and II follow.

Options :

1. ✖ A
2. ✖ B
3. ✖ C
4. ✔ D

Question Number : 8 Question Type : NAT

A tiger is 50 leaps of its own behind a deer. The tiger takes 5 leaps per minute to the deer's 4. If the tiger and the deer cover 8 metre and 5metre per leap respectively, what distance in metres will the tiger have to run before it catches the deer?

Correct Answer :

800

Question Number : 9 Question Type : MCQ

If $a^2 + b^2 + c^2 = 1$, then $ab + bc + ac$ lies in the interval

(A) [1, 2/3]
(B) [−1/2, 1]
(C) [−1, 1/2]
(D) [2, −4]

Options :

1. ✖ A
2. ✔ B
3. ✖ C
4. ✖ D

Question Number : 10 Question Type : MCQ

Lamenting the gradual sidelining of the arts in school curricula, a group of prominent artists wrote to the Chief Minister last year, asking him to allocate more funds to support arts education in schools. However, no such increase has been announced in this year's Budget. The artists expressed their deep anguish at their request not being approved, but many of them remain optimistic about funding in the future.

Which of the statement(s) below is/are logically valid and can be inferred from the above statements?

(i) The artists expected funding for the arts to increase this year.
(ii) The Chief Minister was receptive to the idea of increasing funding for the arts.
(iii) The Chief Minister is a prominent artist.
(iv) Schools are giving less importance to arts education nowadays.

(A) (iii) and (iv) (B) (i) and (iv) (C) (i), (ii) and (iv) (D) (i) and (iii)

Options :

1. ✖ A
2. ✔ B
3. ✖ C
4. ✖ D

Electronics and Communication Engineering

Number of Questions:	55
Section Marks:	85.0

Q.11 to Q.35 carry 1 mark each & Q.36 to Q.65 carry 2 marks each.

Question Number : 11 Question Type : MCQ

The bilateral Laplace transform of a function $f(t) = \begin{cases} 1 \text{ if } a \le t \le b \\ 0 \text{ otherwise} \end{cases}$

is

(A) $\frac{a-b}{s}$ (B) $\frac{e^{s}(a-b)}{s}$ (C) $\frac{e^{-as}-e^{-bs}}{s}$ (D) $\frac{e^{s(a-b)}}{s}$

Options :

1. ✖ A
2. ✖ B
3. ✔ C
4. ✖ D

Question Number : 12 Question Type : MCQ

The value of x for which all the eigen-values of the matrix given below are real is

$$\begin{bmatrix} 10 & 5+j & 4 \\ x & 20 & 2 \\ 4 & 2 & -10 \end{bmatrix}$$

(A) $5+j$ (B) $5-j$ (C) $1-5j$ (D) $1+5j$

Options :
1. ✖ A
2. ✔ B
3. ✖ C
4. ✖ D

Question Number : 13 Question Type : NAT

Let $f(z) = \frac{az+b}{cz+d}$. If $f(z_1) = f(z_2)$ for all $z_1 \neq z_2$, $a = 2, b = 4$ and $c = 5$, then d should be equal to _____.

Correct Answer :
9.9 to 10.1

Question Number : 14 Question Type : MCQ

The general solution of the differential equation $\frac{dy}{dx} = \frac{1+\cos 2y}{1-\cos 2x}$ is

(A) $\tan y - \cot x = c$ (c is a constant) (B) $\tan x - \cot y = c$ (c is a constant)
(C) $\tan y + \cot x = c$ (c is a constant) (D) $\tan x + \cot y = c$ (c is a constant)

Options :
1. ✖ A
2. ✖ B
3. ✔ C
4. ✖ D

Question Number : 15 Question Type : MCQ

The magnitude and phase of the complex Fourier series coefficients a_k of a periodic signal $x(t)$ are shown in the figure. Choose the correct statement from the four choices given. Notation: C is the set of complex numbers, R is the set of purely real numbers, and P is the set of purely imaginary numbers.

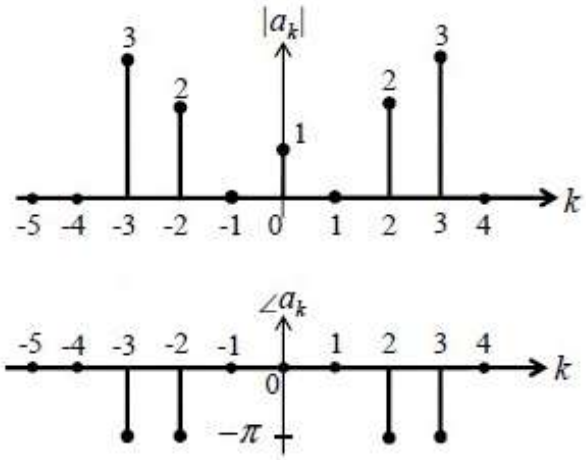

(A) $x(t) \in R$
(B) $x(t) \in P$
(C) $x(t) \in (C - R)$
(D) the information given is not sufficient to draw any conclusion about $x(t)$

Options :

1. ✔ A
2. ✖ B
3. ✖ C
4. ✖ D

Question Number : 16 Question Type : NAT

The voltage (V_C) across the capacitor (in Volts) in the network shown is _____ .

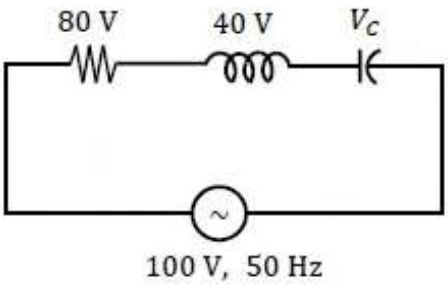

Correct Answer:
100

Question Number : 17 Question Type : NAT

In the circuit shown, the *average* value of the voltage V_{ab} (in Volts) in steady state condition is _____.

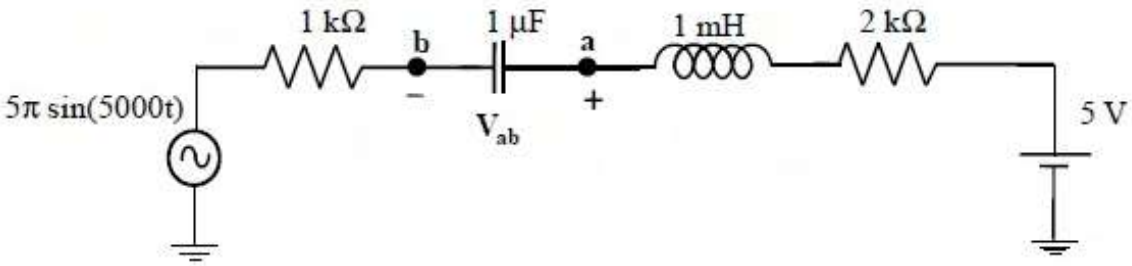

Correct Answer:
4.9 to 5.1

Question Number : 18 Question Type : MCQ

The 2-port admittance matrix of the circuit shown is given by

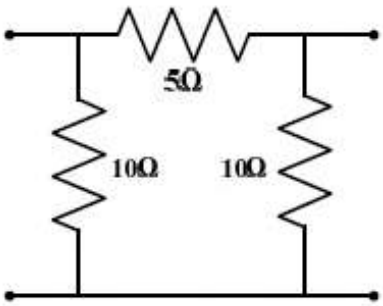

(A) $\begin{bmatrix} 0.3 & 0.2 \\ 0.2 & 0.3 \end{bmatrix}$

(B) $\begin{bmatrix} 15 & 5 \\ 5 & 15 \end{bmatrix}$

(C) $\begin{bmatrix} 3.33 & 5 \\ 5 & 3.33 \end{bmatrix}$

(D) $\begin{bmatrix} 0.3 & 0.4 \\ 0.4 & 0.3 \end{bmatrix}$

Options :
1. ✔ A
2. ✖ B
3. ✖ C
4. ✖ D

Question Number : 19 Question Type : NAT

An n-type silicon sample is uniformly illuminated with light which generates 10^{20} electron-hole pairs per cm^3 per second. The minority carrier lifetime in the sample is 1 μs. In the steady state, the hole concentration in the sample is approximately 10^x, where x is an integer. The value of x is ___.

Correct Answer :
14

Question Number : 20 Question Type : NAT

A piece of silicon is doped uniformly with phosphorous with a doping concentration of $10^{16}/cm^3$. The expected value of mobility versus doping concentration for silicon assuming full dopant ionization is shown below. The charge of an electron is 1.6×10^{-19} C. The conductivity (in S cm^{-1}) of the silicon sample at 300 K is _____.

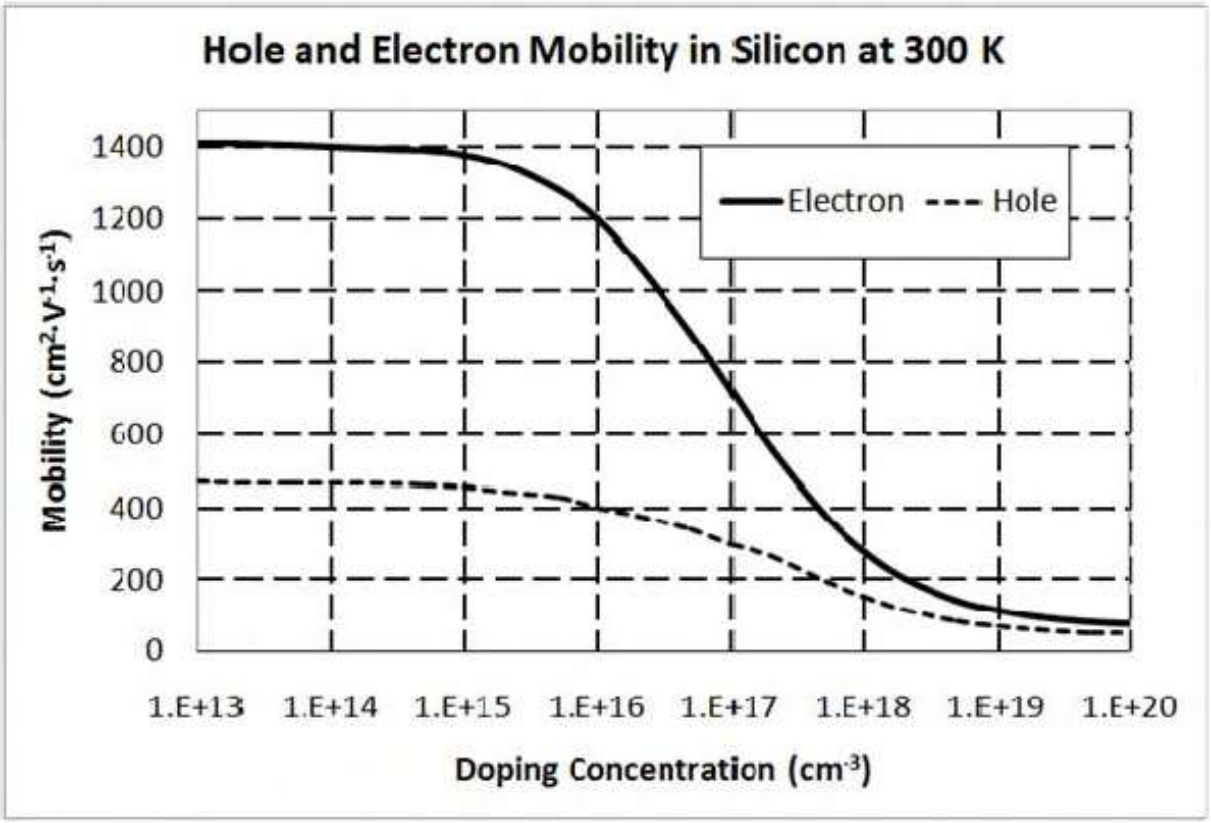

Correct Answer :

1.8 to 2.0

Question Number : 21 Question Type : MCQ

If the circuit shown has to function as a clamping circuit, then which one of the following conditions should be satisfied for the sinusoidal signal of period T ?

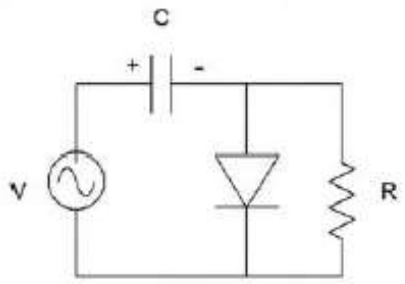

(A) RC << T (B) RC = 0.35 T (C) RC ≈ T (D) RC >> T

Options :

1. ✖ A
2. ✖ B

3. ✖ C

4. ✔ D

Question Number : 22 Question Type : NAT

In the circuit shown, $V_0 = V_{0A}$ for switch SW in position A and $V_0 = V_{0B}$ for SW in position B. Assume that the opamp is ideal. The value of $\frac{V_{0B}}{V_{0A}}$ is _____.

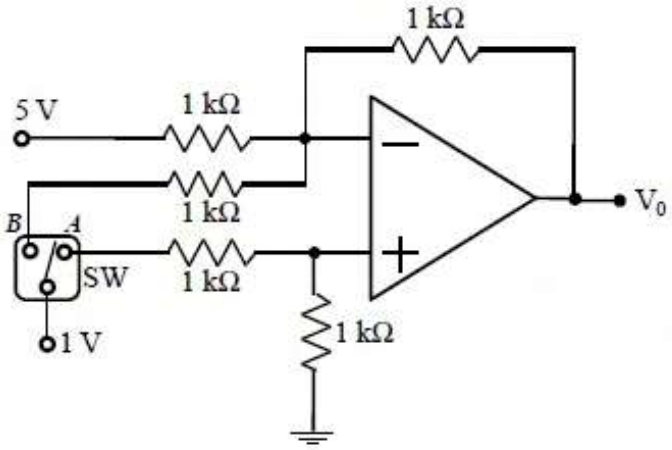

Correct Answer :

1.5

Question Number : 23 Question Type :NAT

In the bistable circuit shown, the ideal opamp has saturation levels of ± 5 V. The value of R_1 (in kΩ) that gives a hysteresis width of 500 mV is _____.

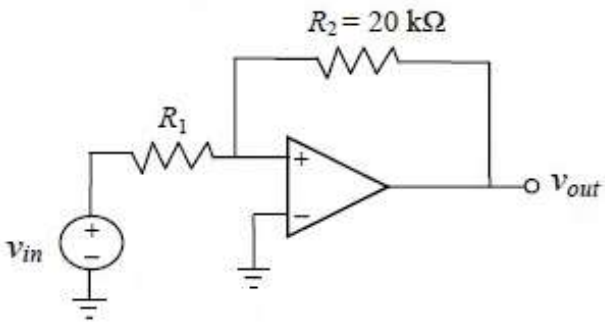

Correct Answer:

1

Question Number : 24 Question Type : MCQ

In the figure shown, the output Y is required to be $Y = A\,B + \bar{C}\,\bar{D}$. The gates G1 and G2 must be, respectively,

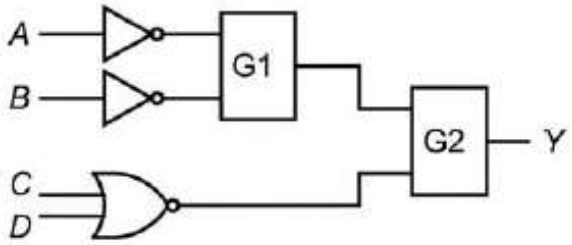

(A) NOR, OR
(B) OR, NAND
(C) NAND, OR
(D) AND, NAND

Options :

1. ✔ A
2. ✖ B
3. ✖ C
4. ✖ D

Question Number : 25 Question Type : MCQ

In an 8085 microprocessor, which one of the following instructions changes the content of the accumulator?

(A) MOV B,M
(B) PCHL
(C) RNZ
(D) SBI BEH

Options :

1. ✖ A
2. ✖ B
3. ✖ C
4. ✔ D

Question Number : 26 Question Type : NAT

A mod-n counter using a synchronous binary up-counter with synchronous clear input is shown in the figure. The value of n is _____.

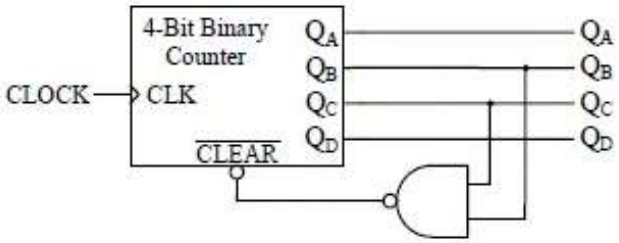

Correct Answer :

7

Question Number : 27 Question Type : MCQ

Let the signal $f(t) = 0$ outside the interval $[T_1, T_2]$, where T_1 and T_2 are finite. Furthermore, $|f(t)| < \infty$. The region of convergence (RoC) of the signal's bilateral Laplace transform $F(s)$ is

(A) a parallel strip containing the $j\Omega$ axis
(B) a parallel strip not containing the $j\Omega$ axis
(C) the entire s-plane
(D) a half plane containing the $j\Omega$ axis

Options :

1. ✖ A
2. ✖ B
3. ✔ C
4. ✖ D

Question Number : 28 Question Type : NAT

Two causal discrete-time signals $x[n]$ and $y[n]$ are related as $y[n] = \sum_{m=0}^{n} x[m]$.

If the z-transform of $y[n]$ is $\frac{2}{z(z-1)^2}$, the value of $x[2]$ is _____.

Correct Answer :

0

Question Number : 29 Question Type : MCQ

By performing cascading and/or summing/differencing operations using transfer function blocks $G_1(s)$ and $G_2(s)$, one **CANNOT** realize a transfer function of the form

(A) $G_1(s)G_2(s)$

(B) $\frac{G_1(s)}{G_2(s)}$

(C) $G_1(s)\left(\frac{1}{G_1(s)} + G_2(s)\right)$

(D) $G_1(s)\left(\frac{1}{G_1(s)} - G_2(s)\right)$

Options :

1. ✖ A
2. ✔ B
3. ✖ C
4. ✖ D

Question Number : 30 Question Type : MCQ

For the signal flow graph shown in the figure, the value of $\frac{C(s)}{R(s)}$ is

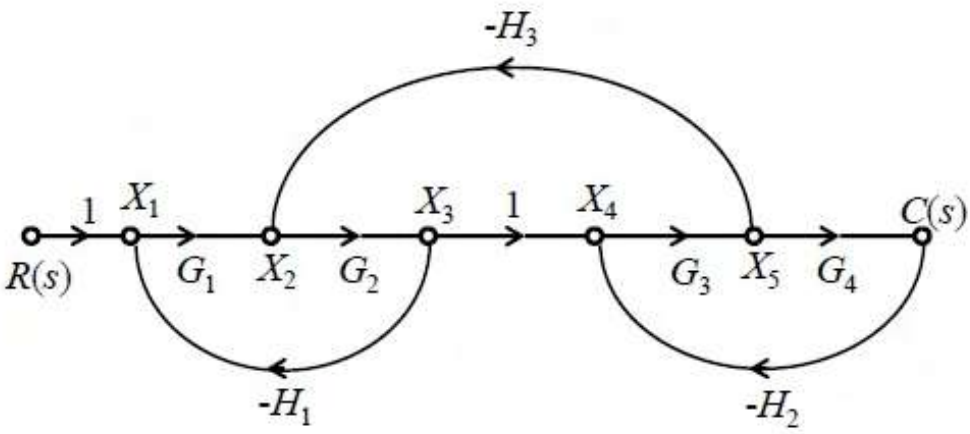

(A) $\frac{G_1G_2G_3G_4}{1-G_1G_2H_1-G_3G_4H_2-G_2G_3H_3+G_1G_2G_3G_4H_1H_2}$

(B) $\frac{G_1G_2G_3G_4}{1+G_1G_2H_1+G_3G_4H_2+G_2G_3H_3+G_1G_2G_3G_4H_1H_2}$

(C) $\frac{1}{1+G_1G_2H_1+G_3G_4H_2+G_2G_3H_3+G_1G_2G_3G_4H_1H_2}$

(D) $\frac{1}{1-G_1G_2H_1-G_3G_4H_2-G_2G_3H_3+G_1G_2G_3G_4H_1H_2}$

Options :

1. ✖ A
2. ✔ B
3. ✖ C
4. ✖ D

Question Number : 31 Question Type : NAT

A unity negative feedback system has an open-loop transfer function $G(s) = \frac{K}{s(s+10)}$. The gain K for the system to have a damping ratio of 0.25 is _____.

Correct Answer :

400

Question Number : 32 Question Type : NAT

A sinusoidal signal of amplitude A is quantized by a uniform quantizer. Assume that the signal utilizes all the representation levels of the quantizer. If the signal to quantization noise ratio is 31.8 dB, the number of levels in the quantizer is _____.

Correct Answer:
32

Question Number : 33 Question Type : MCQ

The signal $\cos\left(10\pi t+\frac{\pi}{4}\right)$ is ideally sampled at a sampling frequency of 15 Hz. The sampled signal is passed through a filter with impulse response $\left(\frac{\sin(\pi t)}{\pi t}\right)\cos\left(40\pi t-\frac{\pi}{2}\right)$. The filter output is

(A) $\frac{15}{2}\cos\left(40\pi t-\frac{\pi}{4}\right)$

(B) $\frac{15}{2}\left(\frac{\sin(\pi t)}{\pi t}\right)\cos\left(10\pi t+\frac{\pi}{4}\right)$

(C) $\frac{15}{2}\cos\left(10\pi t-\frac{\pi}{4}\right)$

(D) $\frac{15}{2}\left(\frac{\sin(\pi t)}{\pi t}\right)\cos\left(40\pi t-\frac{\pi}{2}\right)$

Options :
1. ✔ A
2. ✖ B
3. ✖ C
4. ✖ D

Question Number : 34 Question Type : NAT

In a source free region in vacuum, if the electrostatic potential $\varphi = 2x^2 + y^2 + cz^2$, the value of constant c must be _____.

Correct Answer :
-3.1 to -2.9

Question Number : 35 Question Type : MCQ

The electric field of a uniform plane electromagnetic wave is

$$\vec{E} = (\vec{a}_x + j4\vec{a}_y)\exp[j(2\pi \times 10^7 t - 0.2z)].$$

The polarization of the wave is

(A) right handed circular
(B) right handed elliptical
(C) left handed circular
(D) left handed elliptical

Options :

1. ✖ A
2. ✖ B
3. ✖ C
4. ✔ D

Question Number : 36 Question Type : MCQ

Consider the differential equation $\frac{dx}{dt} = 10 - 0.2x$ with initial condition $x(0) = 1$. The response $x(t)$ for $t > 0$ is

(A) $2 - e^{-0.2t}$
(B) $2 - e^{0.2t}$
(C) $50 - 49e^{-0.2t}$
(D) $50 - 49e^{0.2t}$

Options :

1. ✖ A
2. ✖ B
3. ✔ C
4. ✖ D

Question Number : 37 Question Type : NAT

The value of the integral $\int_{-\infty}^{\infty} 12\ \cos(2\pi t)\ \frac{\sin(4\pi t)}{4\pi t}\ dt$ is _____.

Correct Answer :

3

Question Number : 38 Question Type : NAT

If C denotes the counterclockwise unit circle, the value of the contour integral

$$\frac{1}{2\pi j}\oint_C Re\{z\}dz$$

is _____.

Correct Answer:
0.5

Question Number : 39 Question Type : NAT

Let the random variable X represent the number of times a fair coin needs to be tossed till two consecutive heads appear for the first time. The expectation of X is _____.

Correct Answer :
1.5

Question Number : 40 Question Type : MCQ

An LC tank circuit consists of an ideal capacitor C connected in parallel with a coil of inductance L having an internal resistance R. The resonant frequency of the tank circuit is

(A) $\frac{1}{2\pi\sqrt{LC}}$

(B) $\frac{1}{2\pi\sqrt{LC}}\sqrt{1-R^2\frac{C}{L}}$

(C) $\frac{1}{2\pi\sqrt{LC}}\sqrt{1-\frac{L}{R^2C}}$

(D) $\frac{1}{2\pi\sqrt{LC}}\left(1-R^2\frac{C}{L}\right)$

Options :
1. ✖ A
2. ✔ B
3. ✖ C
4. ✖ D

Question Number : 41 Question Type : NAT

In the circuit shown, the Norton equivalent resistance (in Ω) across terminals a-b is _____.

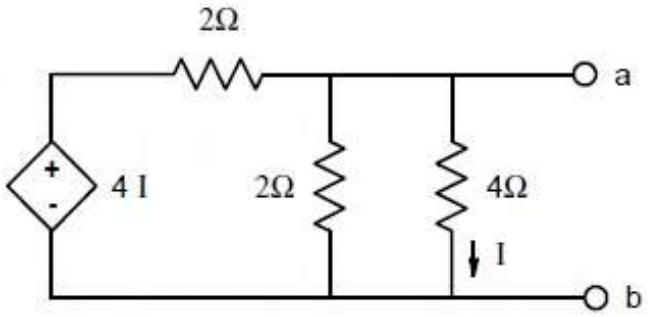

Correct Answer :
1.30 to 1.35

Question Number : 42 Question Type : NAT

In the circuit shown, the initial voltages across the capacitors C_1 and C_2 are 1 V and 3 V, respectively. The switch is closed at time $t = 0$. The total energy dissipated (in Joules) in the resistor R until steady state is reached, is _____.

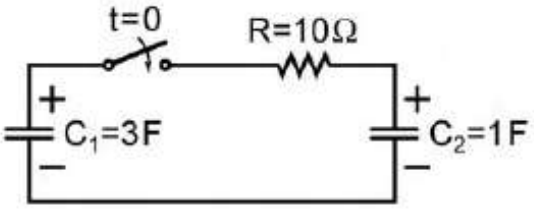

Correct Answer:
1.4 to 1.6

Question Number : 43 Question Type : NAT

A dc voltage of 10 V is applied across an n-type silicon bar having a rectangular cross-section and a length of 1 cm as shown in figure. The donor doping concentration N_D and the mobility of electrons μ_n are 10^{16} cm^{-3} and 1000 $cm^2V^{-1}s^{-1}$, respectively. The average time (in μs) taken by the electrons to move from one end of the bar to other end is _____.

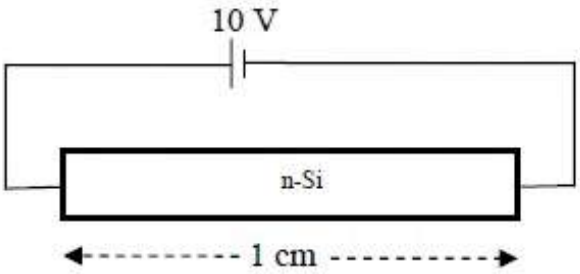

Correct Answer:
95 to 105

Question Number : 44 Question Type : NAT

In a MOS capacitor with an oxide layer thickness of 10 nm, the maximum depletion layer thickness is 100 nm. The permittivities of the semiconductor and the oxide layer are ε_s and ε_{ox} respectively. Assuming $\varepsilon_s/\varepsilon_{ox} = 3$, the ratio of the maximum capacitance to the minimum capacitance of this MOS capacitor is _____.

Correct Answer :
4.3 to 4.4

Question Number : 45 Question Type : MCQ

The energy band diagram and the electron density profile n(x) in a semiconductor are shown in the figures. Assume that $n(x) = 10^{15} e^{\left(\frac{q\alpha x}{kT}\right)}$ cm^{-3}, with $\alpha = 0.1$ V/cm and x expressed in cm. Given $\frac{kT}{q} = 0.026$ V, $D_n = 36$ cm^{2}s^{-1}, and $\frac{D}{\mu} = \frac{kT}{q}$. The electron current density (in A/cm^2) at x = 0 is

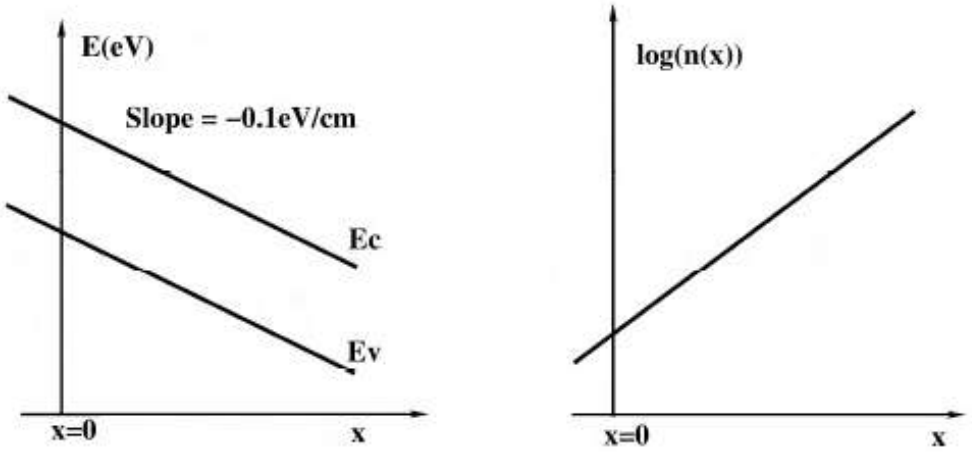

(A) -4.4×10^{-2} (B) -2.2×10^{-2} (C) 0 (D) 2.2×10^{-2}

Options :

1. ✖ A
2. ✖ B
3. ✔ C
4. ✖ D

Question Number : 46 Question Type : MCQ

A function of Boolean variables X, Y and Z is expressed in terms of the min-terms as

$$F(X, Y, Z) = \Sigma\,(1, 2, 5, 6, 7)$$

Which one of the product of sums given below is equal to the function $F(X, Y, Z)$?

(A) $(\overline{X}+\overline{Y}+\overline{Z})\cdot(\overline{X}+Y+Z)\cdot(X+\overline{Y}+\overline{Z})$

(B) $(X+Y+Z)\cdot(X+\overline{Y}+\overline{Z})\cdot(\overline{X}+Y+Z)$

(C) $(\overline{X}+\overline{Y}+Z)\cdot(\overline{X}+Y+\overline{Z})\cdot(X+\overline{Y}+Z)\cdot(X+Y+\overline{Z})\cdot(X+Y+Z)$

(D) $(X+Y+\overline{Z})\cdot(\overline{X}+Y+Z)\cdot(\overline{X}+Y+\overline{Z})\cdot(\overline{X}+\overline{Y}+Z)\cdot(\overline{X}+\overline{Y}+\overline{Z})$

Options :

1. ✖ A
2. ✔ B
3. ✖ C
4. ✖ D

Question Number : 47 Question Type : MCQ

The figure shows a binary counter with synchronous clear input. With the decoding logic shown, the counter works as a

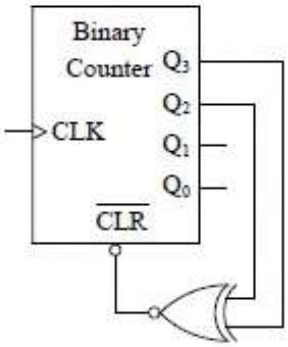

(A) mod-2 counter (B) mod-4 counter (C) mod-5 counter (D) mod-6 counter

Options :

1. ✖ A
2. ✖ B
3. ✔ C
4. ✖ D

Question Number : 48 Question Type : MCQ

A 1-to-8 demultiplexer with data input D_{in}, address inputs S_0, S_1, S_2 (with S_0 as the LSB) and $\overline{Y}_0$ to $\overline{Y}_7$ as the eight demultiplexed outputs, is to be designed using two 2-to-4 decoders (with enable input $\overline{E}$ and address inputs A_0 and A_1) as shown in the figure. D_{in}, S_0, S_1 and S_2 are to be connected to P, Q, R and S, but not necessarily in this order. The respective input connections to P, Q, R, and S terminals should be

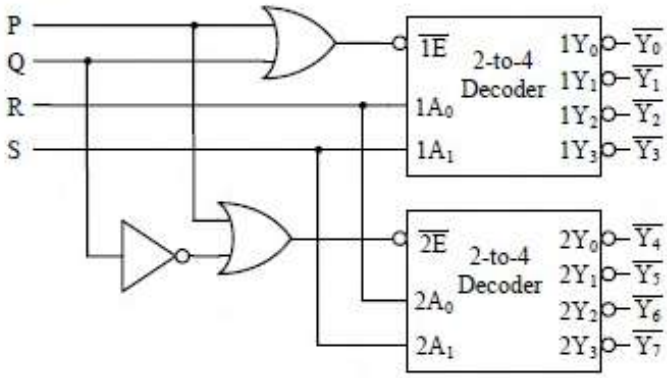

(A) S_2, D_{in}, S_0, S_1 (B) S_1, D_{in}, S_0, S_2

(C) D_{in}, S_0, S_1, S_2 (D) D_{in}, S_2, S_0, S_1

Options :

1. ✖ A
2. ✖ B
3. ✖ C
4. ✔ D

Question Number : 49 Question Type : NAT

The diode in the circuit given below has $V_{ON} = 0.7\ V$ but is ideal otherwise. The current (in mA) in the 4 kΩ resistor is _____.

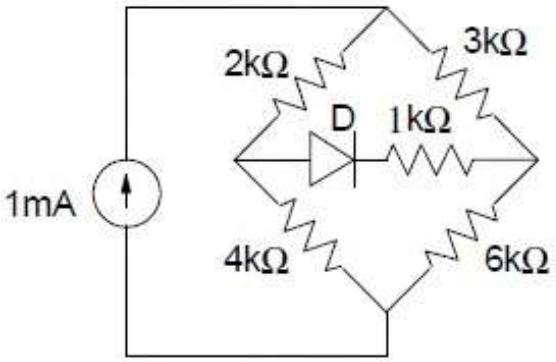

Correct Answer :
0.59 to 0.61

Question Number : 50 Question Type : NAT

Assuming that the opamp in the circuit shown below is ideal, the output voltage V_o (in volts) is_____.

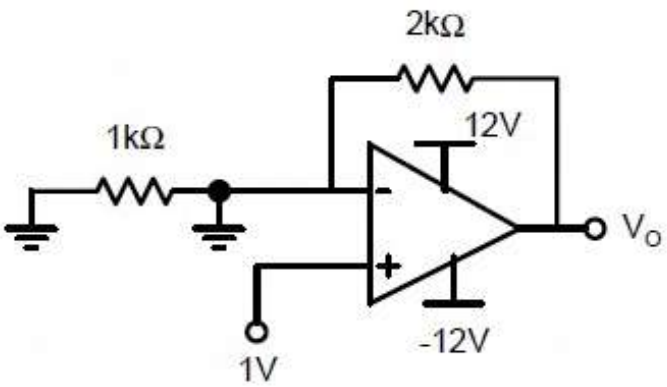

Correct Answer :
11 to 12

Question Number : 51 Question Type : NAT

For the voltage regulator circuit shown, the input voltage (V_{in}) is 20 V ± 20% and the regulated output voltage (V_{out}) is 10 V. Assume the opamp to be ideal. For a load R_L drawing 200 mA, the maximum power dissipation in Q_1 (in Watts) is _____.

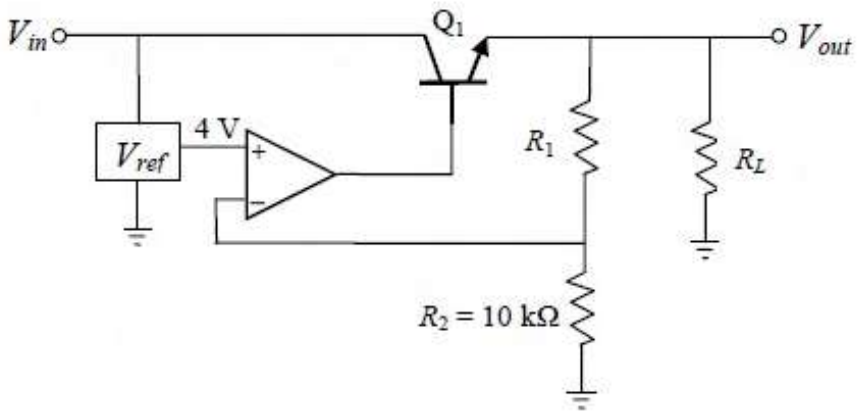

Correct Answer :
2.7 to 2.9

Question Number : 52 Question Type : NAT

In the ac equivalent circuit shown, the two BJTs are biased in active region and have identical parameters with β >>1. The open circuit small signal voltage gain is approximately _____.

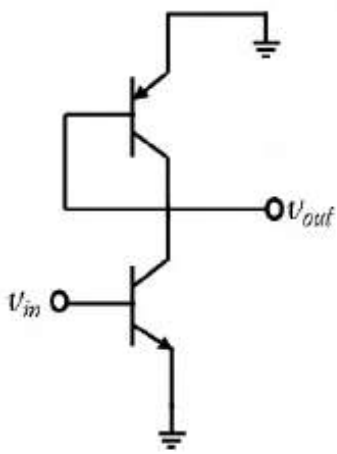

Correct Answer :
-1.1 to -0.9

Question Number : 53 Question Type : MCQ

Input $x(t)$ and output $y(t)$ of an LTI system are related by the differential equation $y''(t)-y'(t)-6y(t)=x(t)$. If the system is neither causal nor stable, the impulse response $h(t)$ of the system is

(A) $\frac{1}{5}e^{3t}u(-t)+\frac{1}{5}e^{-2t}u(-t)$

(B) $-\frac{1}{5}e^{3t}u(-t)+\frac{1}{5}e^{-2t}u(-t)$

(C) $\frac{1}{5}e^{3t}u(-t)-\frac{1}{5}e^{-2t}u(t)$

(D) $-\frac{1}{5}e^{3t}u(-t)-\frac{1}{5}e^{-2t}u(t)$

Options :

1. ✖ A
2. ✔ B
3. ✖ C
4. ✖ D

Question Number : 54 Question Type : NAT

Consider two real sequences with time-origin marked by the bold value,

$$x_1[n]=\{\mathbf{1},2,3,0\},\quad x_2[n]=\{\mathbf{1},3,2,1\}$$

Let $X_1(k)$ and $X_2(k)$ be 4-point DFTs of $x_1[n]$ and $x_2[n]$, respectively.

Another sequence $x_3[n]$ is derived by taking 4-point inverse DFT of $X_3(k)=X_1(k)X_2(k)$.

The value of $x_3[2]$ is _____.

Correct Answer :

10.9 to 11.1

Question Number : 55 Question Type : NAT

Let $x(t)=\alpha\, s(t)+s(-t)$ with $s(t)=\beta e^{-4t}u(t)$, where $u(t)$ is unit step function. If the bilateral Laplace transform of $x(t)$ is

$$X(s)=\frac{16}{s^2-16}\quad -4<\mathrm{Re}\{s\}<4;$$

then the value of β is _____.

Correct Answer :

-2

Question Number : 56 Question Type : MCQ

The state variable representation of a system is given as

$$\dot{x} = \begin{bmatrix} 0 & 1 \\ 0 & -1 \end{bmatrix} x; \quad x(0) = \begin{bmatrix} 1 \\ 0 \end{bmatrix}$$

$$y = \begin{bmatrix} 0 & 1 \end{bmatrix} x$$

The response $y(t)$ is

(A) $\sin(t)$ (B) $1-e^{t}$ (C) $1-\cos(t)$ (D) 0

Options :

1. ✖ A
2. ✖ B
3. ✖ C
4. ✔ D

Question Number : 57 Question Type : MCQ

The output of a standard second-order system for a unit step input is given as $y(t) = 1 - \frac{2}{\sqrt{3}} e^{-t} \cos\left(\sqrt{3}t - \frac{\pi}{6}\right)$. The transfer function of the system is

(A) $\frac{2}{(s+2)(s+\sqrt{3})}$ (B) $\frac{1}{s^2+2s+1}$ (C) $\frac{3}{s^2+2s+3}$ (D) $\frac{4}{s^2+2s+4}$

Options :

1. ✖ A
2. ✖ B
3. ✖ C
4. ✔ D

Question Number : 58 Question Type : NAT

The transfer function of a mass-spring-damper system is given by

$$G(s) = \frac{1}{Ms^2 + Bs + K}$$

The frequency response data for the system are given in the following table.

ω in rad/s	$\lvert G(j\omega)\rvert$ in dB	arg $(G(j\omega))$ in deg
0.01	-18.5	-0.2
0.1	-18.5	-1.3
0.2	-18.4	-2.6
1	-16	-16.9
2	-11.4	-89.4
3	-21.5	-151
5	-32.8	-167
10	-45.3	-174.5

The unit step response of the system approaches a steady state value of _____ .

Correct Answer :
0.10 to 0.13

Question Number : 59 Question Type : MCQ

A zero mean white Gaussian noise having power spectral density $\frac{N_0}{2}$ is passed through an LTI filter whose impulse response $h(t)$ is shown in the figure. The variance of the filtered noise at $t = 4$ is

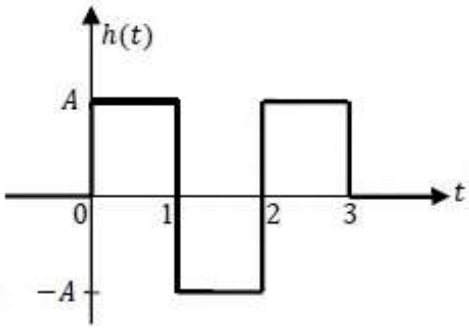

(A) $\frac{3}{2}A^2N_0$

(B) $\frac{3}{4}A^2N_0$

(C) A^2N_0

(D) $\frac{1}{2}A^2N_0$

Options :
1. ✔ A
2. ✖ B
3. ✖ C
4. ✖ D

Question Number : 60 Question Type : MCQ

$\{X_n\}_{n=-\infty}^{n=\infty}$ is an independent and identically distributed (i.i.d.) random process with X_n equally likely to be $+1$ or -1. $\{Y_n\}_{n=-\infty}^{n=\infty}$ is another random process obtained as $Y_n = X_n + 0.5\,X_{n-1}$. The autocorrelation function of $\{Y_n\}_{n=-\infty}^{n=\infty}$, denoted by $R_Y[k]$, is

(A)

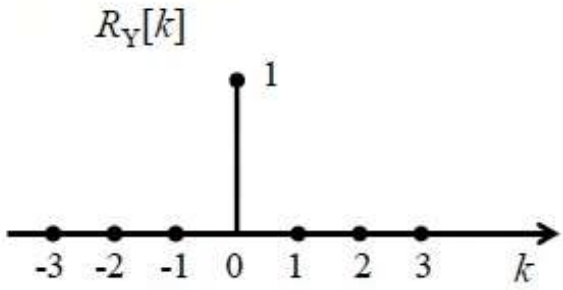

(B)

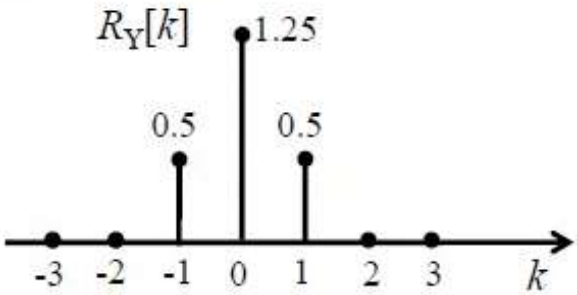

(C)

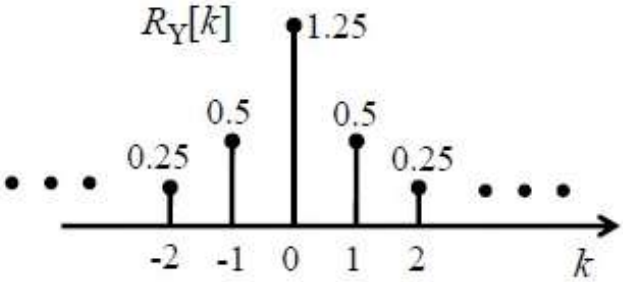

(D)

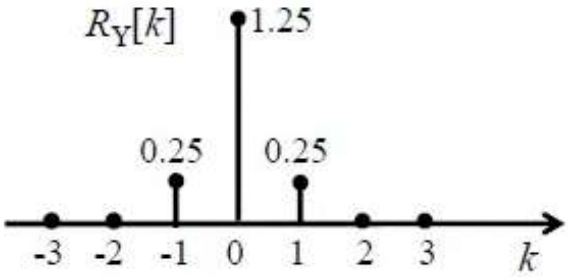

Options :

1. ✖ A
2. ✔ B
3. ✖ C
4. ✖ D

Question Number : 61 Question Type : MCQ

Consider a binary, digital communication system which uses pulses $g(t)$ and $-g(t)$ for transmitting bits over an AWGN channel. If the receiver uses a matched filter, which one of the following pulses will give the minimum probability of bit error?

(A)
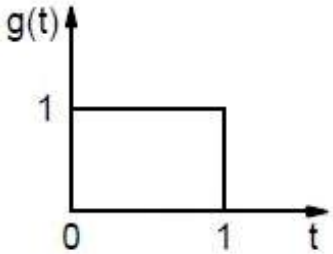

(B)
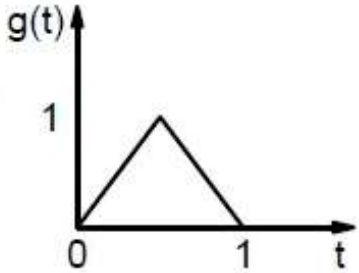

(C)
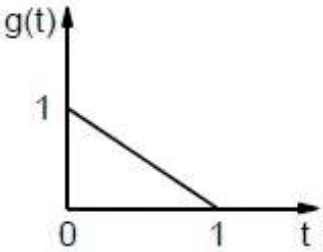

(D)
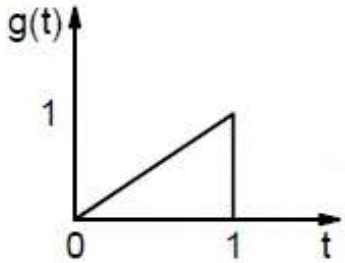

Options :

1. ✔ A
2. ✖ B
3. ✖ C
4. ✖ D

Question Number : 62 Question Type : MCQ

Let $X \in \{0,1\}$ and $Y \in \{0,1\}$ be two independent binary random variables. If $P(X = 0) = p$ and $P(Y = 0) = q$, then $P(X + Y \geq 1)$ is equal to

(A) $pq + (1-p)(1-q)$
(B) pq
(C) $p(1-q)$
(D) $1 - pq$

Options :

1. ✖ A
2. ✖ B
3. ✖ C
4. ✔ D

Question Number : 63 Question Type : NAT

An air-filled rectangular waveguide of internal dimensions a cm $\times$ b cm $(a > b)$ has a cutoff frequency of 6 GHz for the dominant TE_{10} mode. For the same waveguide, if the cutoff frequency of the TM_{11} mode is 15 GHz, the cutoff frequency of the TE_{01} mode in GHz is _____.

Correct Answer:
13.5 to 13.8

Question Number : 64 Question Type : NAT

Two half-wave dipole antennas placed as shown in the figure are excited with sinusoidally varying currents of frequency 3 MHz and phase shift of $\pi/2$ between them (the element at the origin leads in phase). If the maximum radiated E-field at the point P in the x-y plane occurs at an azimuthal angle of 60°, the distance d (in meters) between the antennas is _____.

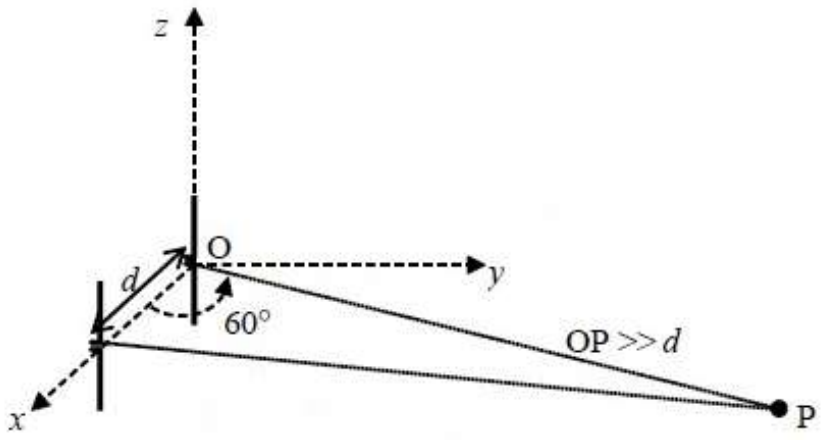

Correct Answer:
49 to 51

Question Number : 65 Question Type : MCQ

The electric field of a plane wave propagating in a lossless non-magnetic medium is given by the following expression

$$\mathbf{E}(z,t) = \mathbf{a}_x\, 5\, \cos(2\pi \times 10^9 t + \beta z) + \mathbf{a}_y\, 3\, \cos\left(2\pi \times 10^9 t + \beta z - \frac{\pi}{2}\right)$$

The type of the polarization is

(A) Right Hand Circular.
(B) Left Hand Elliptical.
(C) Right Hand Elliptical.
(D) Linear.

Options :
1. ✖ A
2. ✔ B
3. ✖ C
4. ✖ D

SESSION - 3

Graduate Aptitude Test in Engineering

Notations :

1.Options shown in green color and with ✔ icon are correct.

2.Options shown in red color and with ✖ icon are incorrect.

Question Paper Name: EC : ELECTRONICS AND COMMUNICATION ENGINEERING 1st Feb Shift 1
Number of Questions: 65
Total Marks: 100.0

Wrong answer for MCQ will result in negative marks, (-1/3) for 1 mark Questions and (-2/3) for 2 marks Questions.

General Aptitude

Number of Questions: 10
Section Marks: 15.0

Q.1 to Q.5 carry 1 mark each & Q.6 to Q.10 carry 2 marks each.

Question Number : 1 Question Type : MCQ

Choose the most appropriate word from the options given below to complete the following sentence.

If the athlete had wanted to come first in the race, he _____ several hours every day.

(A) should practise
(B) should have practised
(C) practised
(D) should be practising

Options :

1. ✖ A
2. ✔ B
3. ✖ C
4. ✖ D

Question Number : 2 Question Type : MCQ

Choose the most suitable one word substitute for the following expression:

Connotation of a road or way

(A) Pertinacious (B) Viaticum (C) Clandestine (D) Ravenous

Options :

1. ✖ A
2. ✔ B
3. ✖ C
4. ✖ D

Question Number : 3 Question Type : MCQ

Choose the correct verb to fill in the blank below:

Let us _____.

(A) introvert (B) alternate (C) atheist (D) altruist

Options :

1. ✖ A
2. ✔ B
3. ✖ C
4. ✖ D

Question Number : 4 Question Type : MCQ

Find the missing sequence in the letter series below:
A, CD, GHI, ?, UVWXY

(A) LMN (B) MNO (C) MNOP (D) NOPQ

Options :

1. ✖ A
2. ✖ B
3. ✔ C
4. ✖ D

Question Number : 5 Question Type : MCQ

If $x > y > 1$, which of the following must be true?

i. $\ln x > \ln y$ ii. $e^x > e^y$ iii. $y^x > x^y$ iv. $\cos x > \cos y$

(A) (i) and (ii) (B) (i) and (iii)
(C) (iii) and (iv) (D) (ii) and (iv)

Options :

1. ✔ A
2. ✖ B
3. ✖ C
4. ✖ D

Question Number : 6 Question Type : MCQ

Ram and Shyam shared a secret and promised to each other that it would remain between them. Ram expressed himself in one of the following ways as given in the choices below. Identify the correct way as per standard English.

(A) It would remain between you and me.
(B) It would remain between I and you.
(C) It would remain between you and I.
(D) It would remain with me.

Options :

1. ✔ A

2. ✖ B

3. ✖ C

4. ✖ D

Question Number : 7 Question Type : MCQ

In the following question, the first and the last sentence of the passage are in order and numbered 1 and 6. The rest of the passage is split into 4 parts and numbered as 2, 3, 4, and 5. These 4 parts are not arranged in proper order. Read the sentences and arrange them in a logical sequence to make a passage and choose the correct sequence from the given options.

1. On Diwali, the family rises early in the morning.
2. The whole family, including the young and the old enjoy doing this.
3. Children let off fireworks later in the night with their friends.
4. At sunset, the lamps are lit and the family performs various rituals.
5. Father, mother, and children visit relatives and exchange gifts and sweets.
6. Houses look so pretty with lighted lamps all around.

(A) 2,5,3,4 (B) 5,2,4,3 (C) 3,5,4,2 (D) 4,5,2,3

Options :

1. ✖ A

2. ✔ B

3. ✖ C

4. ✖ D

Question Number : 8 Question Type : NAT

From a circular sheet of paper of radius 30 cm, a sector of 10% area is removed. If the remaining part is used to make a conical surface, then the ratio of the radius and height of the cone is _____.

Correct Answer :

1.9 to 2.2

Question Number : 9 Question Type : MCQ

$\log \tan 1^\circ + \log \tan 2^\circ + \ldots\ldots + \log \tan 89^\circ$ is....

(A) 1 (B) $1/\sqrt{2}$ (C) 0 (D) -1

Options :

1. ✖ A

2. ✖ B

3. ✔ C

4. ✖ D

Question Number : 10 Question Type : MCQ

Ms. X will be in Bagdogra from 01/05/2014 to 20/05/2014 and from 22/05/2014 to 31/05/2014. On the morning of 21/05/2014, she will reach Kochi via Mumbai.

Which one of the statements below is logically valid and can be inferred from the above sentences?

(A) Ms. X will be in Kochi for one day, only in May.
(B) Ms. X will be in Kochi for only one day in May.
(C) Ms. X will be only in Kochi for one day in May.
(D) Only Ms. X will be in Kochi for one day in May.

Options :

1. ✖ A
2. ✔ B
3. ✖ C
4. ✖ D

Electronics and Communication Engineering

Number of Questions:	55
Section Marks:	85.0

Q.11 to Q.35 carry 1 mark each & Q.36 to Q.65 carry 2 marks each.

Question Number : 11 Question Type : MCQ

For $A = \begin{bmatrix} 1 & \tan x \\ -\tan x & 1 \end{bmatrix}$, the determinant of $A^T A^{-1}$ is

(A) $\sec^2 x$ (B) $\cos 4x$ (C) 1 (D) 0

Options :

1. ✖ A
2. ✖ B
3. ✔ C
4. ✖ D

Question Number : 12 Question Type : MCQ

The contour on the x-y plane, where the partial derivative of $x^2 + y^2$ with respect to y is equal to the partial derivative of $6y + 4x$ with respect to x, is

(A) $y = 2$ (B) $x = 2$ (C) $x + y = 4$ (D) $x - y = 0$

Options :

1. ✔ A
2. ✖ B
3. ✖ C
4. ✖ D

Question Number : 13 Question Type : MCQ

If C is a circle of radius r with centre z_0, in the complex z-plane and if n is a non-zero integer, then $\oint_C \frac{dz}{(z-z_0)^{n+1}}$ equals

(A) $2\pi nj$ (B) 0 (C) $\frac{nj}{2\pi}$ (D) $2\pi n$

Options :

1. ✖ A
2. ✔ B
3. ✖ C
4. ✖ D

Question Number : 14 Question Type : NAT

Consider the function $g(t) = e^{-t}\sin(2\pi t)u(t)$ where $u(t)$ is the unit step function. The area under $g(t)$ is _____.

Correct Answer :

0.14 to 0.16

Question Number : 15 Question Type : NAT

The value of $\sum_{n=0}^{\infty} n\left(\frac{1}{2}\right)^n$ is _____.

Correct Answer :

2

Question Number : 16 Question Type : NAT

For the circuit shown in the figure, the Thevenin equivalent voltage (in Volts) across terminals a-b is _____.

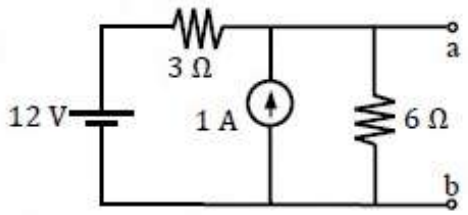

Correct Answer :

10

Question Number : 17 Question Type : NAT

In the circuit shown, the voltage V_X (in Volts) is _____.

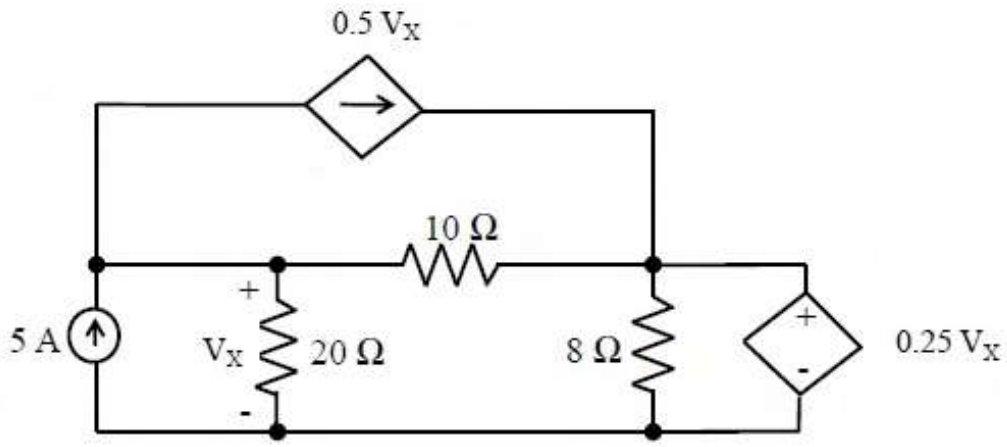

Correct Answer :
7.95 to 8.05

Question Number : 18 Question Type : NAT

At very high frequencies, the peak output voltage V_0 (in Volts) is _____.

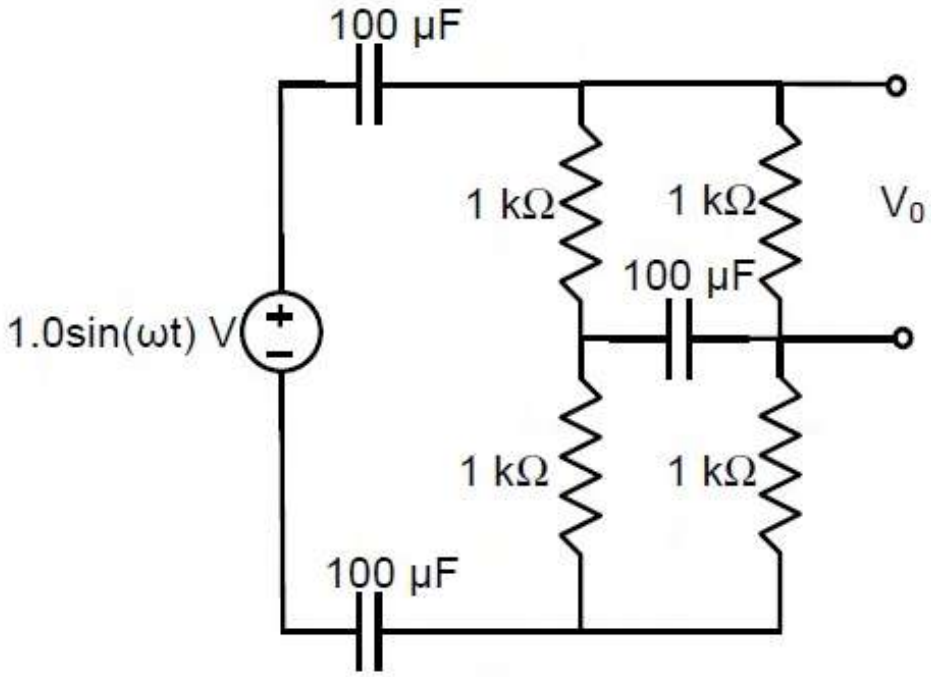

Correct Answer :
0.49 to 0.51

Question Number : 19 Question Type : MCQ

Which one of the following processes is preferred to form the gate dielectric (SiO_2) of MOSFETs ?

(A) Sputtering
(B) Molecular beam epitaxy
(C) Wet oxidation
(D) Dry oxidation

Options :

1. ✖ A
2. ✖ B
3. ✖ C
4. ✔ D

Question Number : 20 Question Type : MCQ

If the base width in a bipolar junction transistor is doubled, which one of the following statements will be TRUE?

(A) Current gain will increase.
(B) Unity gain frequency will increase.
(C) Emitter-base junction capacitance will increase.
(D) Early Voltage will increase.

Options :

1. ✖ A
2. ✖ B
3. ✖ C
4. ✔ D

Question Number : 21 Question Type : NAT

In the circuit shown in the figure, the BJT has a current gain (β) of 50. For an emitter-base voltage V_{EB} = 600 mV, the emitter-collector voltage V_{EC} (in Volts) is _____.

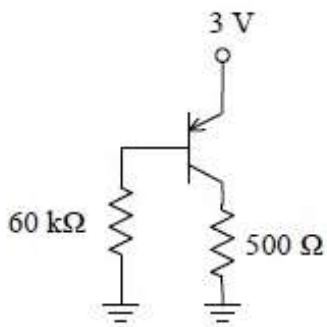

Correct Answer :

2

Question Number : 22 Question Type : NAT

In the circuit shown using an ideal opamp, the 3-dB cut-off frequency (in Hz) is _____.

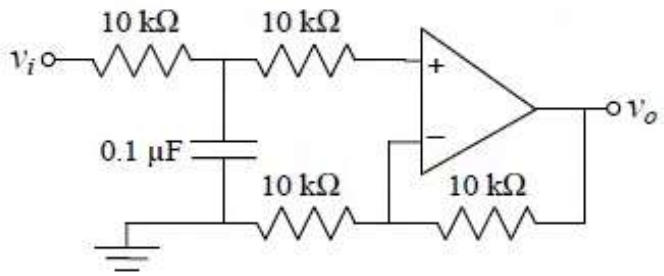

Correct Answer :
159 to 160

Question Number : 23 Question Type : NAT

In the circuit shown, assume that diodes D_1 and D_2 are ideal. In the steady state condition, the average voltage V_{ab} (in Volts) across the 0.5 μF capacitor is _____.

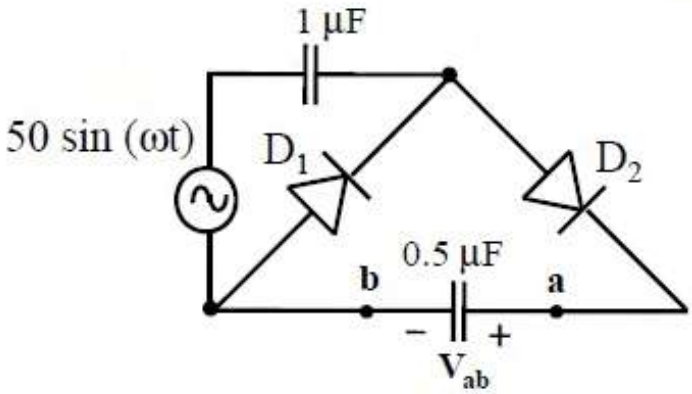

Correct Answer :
100

Question Number : 24 Question Type : MCQ

The circuit shown consists of J-K flip-flops, each with an active low asynchronous reset ($\overline{R_d}$ input). The counter corresponding to this circuit is

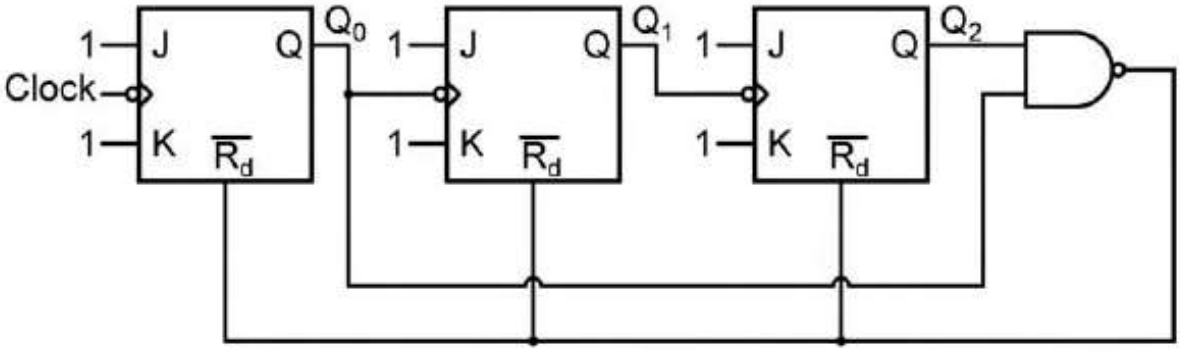

(A) a modulo-5 binary up counter
(B) a modulo-6 binary down counter
(C) a modulo-5 binary down counter
(D) a modulo-6 binary up counter

Options :
1. ✔ A
2. ✖ B
3. ✖ C
4. ✖ D

Question Number : 25 Question Type : MCQ

In the circuit shown, diodes D_1, D_2 and D_3 are ideal, and the inputs E_1, E_2 and E_3 are "0 V" for logic '0' and "10 V" for logic '1'. What logic gate does the circuit represent?

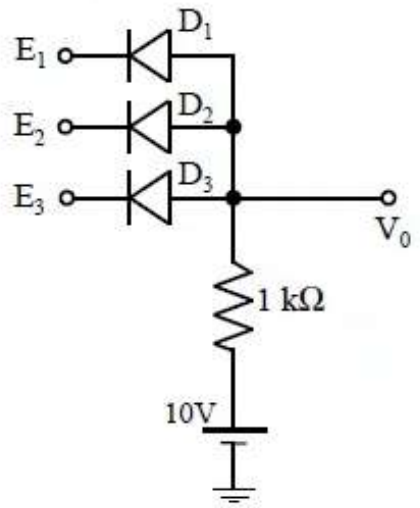

(A) 3-input OR gate
(B) 3-input NOR gate
(C) 3-input AND gate
(D) 3-input XOR gate

Options :

1. ✖ A
2. ✖ B
3. ✔ C
4. ✖ D

Question Number : 26 Question Type : MCQ

Which one of the following 8085 microprocessor programs correctly calculates the product of two 8-bit numbers stored in registers B and C?

(A)
```
        MVI A, 00H
        JNZ LOOP
        CMP C
LOOP    DCR B
        HLT
```

(B)
```
        MVI A, 00H
        CMP C
LOOP    DCR B
        JNZ LOOP
        HLT
```

(C)
```
        MVI A, 00H
LOOP    ADD C
        DCR B
        JNZ LOOP
        HLT
```

(D)
```
        MVI A, 00H
        ADD C
        JNZ LOOP
LOOP    INR B
        HLT
```

Options :

1. ✖ A
2. ✖ B
3. ✔ C
4. ✖ D

Question Number : 27 Question Type : MCQ

The impulse response of an LTI system can be obtained by

(A) differentiating the unit ramp response
(B) differentiating the unit step response
(C) integrating the unit ramp response
(D) integrating the unit step response

Options :

1. ✖ A
2. ✔ B
3. ✖ C
4. ✖ D

Question Number : 28 Question Type : MCQ

Consider a four-point moving average filter defined by the equation $y[n]=\sum_{i=0}^{3}\alpha_i\, x[n-i]$.
The condition on the filter coefficients that results in a null at zero frequency is

(A) $\alpha_1=\alpha_2=0;\quad \alpha_0=-\alpha_3$

(B) $\alpha_1=\alpha_2=1;\quad \alpha_0=-\alpha_3$

(C) $\alpha_0=\alpha_3=0;\quad \alpha_1=\alpha_2$

(D) $\alpha_1=\alpha_2=0;\quad \alpha_0=\alpha_3$

Options :

1. ✔ A
2. ✖ B
3. ✖ C
4. ✖ D

Question Number : 29 Question Type : NAT

Consider the Bode plot shown in the figure. Assume that all the poles and zeros are real-valued.

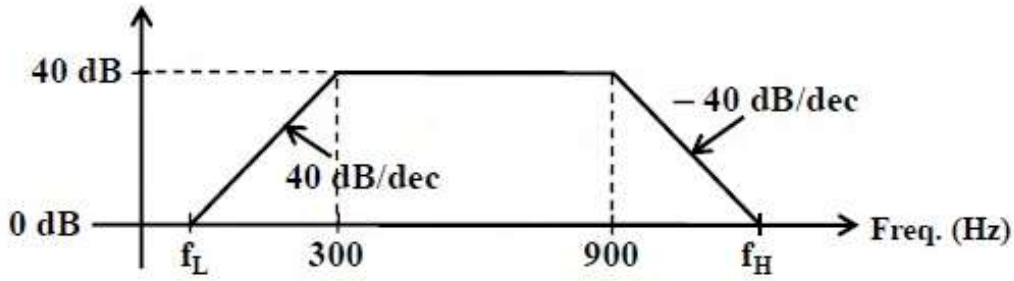

The value of $f_H - f_L$ (in Hz) is _____.

Correct Answer :

8970

Question Number : 30 Question Type : NAT

The phase margin (in degrees) of the system $G(s) = \frac{10}{s(s+10)}$ is _____.

Correct Answer :
84.0 to 84.5

Question Number : 31 Question Type : MCQ

The transfer function of a first-order controller is given as

$$G_C(s) = \frac{K(s+a)}{s+b}$$

where K, a and b are positive real numbers. The condition for this controller to act as a phase lead compensator is

(A) $a < b$ (B) $a > b$ (C) $K < ab$ (D) $K > ab$

Options :
1. ✔ A
2. ✖ B
3. ✖ C
4. ✖ D

Question Number : 32 Question Type : MCQ

The modulation scheme commonly used for transmission from GSM mobile terminals is

(A) 4-QAM
(B) 16-PSK
(C) Walsh-Hadamard orthogonal codes
(D) Gaussian Minimum Shift Keying (GMSK)

Options :
1. ✖ A
2. ✖ B
3. ✖ C
4. ✔ D

Question Number : 33 Question Type : MCQ

A message signal $m(t) = A_m \sin(2\pi f_m t)$ is used to modulate the phase of a carrier $A_c \cos(2\pi f_c t)$ to get the modulated signal $y(t) = A_c \cos(2\pi f_c t + m(t))$. The bandwidth of $y(t)$

(A) depends on A_m but not on f_m
(B) depends on f_m but not on A_m
(C) depends on both A_m and f_m
(D) does not depend on A_m or f_m

Options :
1. ✖ A

2. ✖ B

3. ✔ C

4. ✖ D

Question Number : 34 Question Type : MCQ

The directivity of an antenna array can be increased by adding more antenna elements, as a larger number of elements

(A) improves the radiation efficiency
(B) increases the effective area of the antenna
(C) results in a better impedance matching
(D) allows more power to be transmitted by the antenna

Options :

1. ✖ A

2. ✔ B

3. ✖ C

4. ✖ D

Question Number : 35 Question Type : MCQ

A coaxial cable is made of two brass conductors. The spacing between the conductors is filled with Teflon $(\varepsilon_r' = 2.1,\ \tan\delta = 0)$. Which one of the following circuits can represent the lumped element model of a small piece of this cable having length Δz?

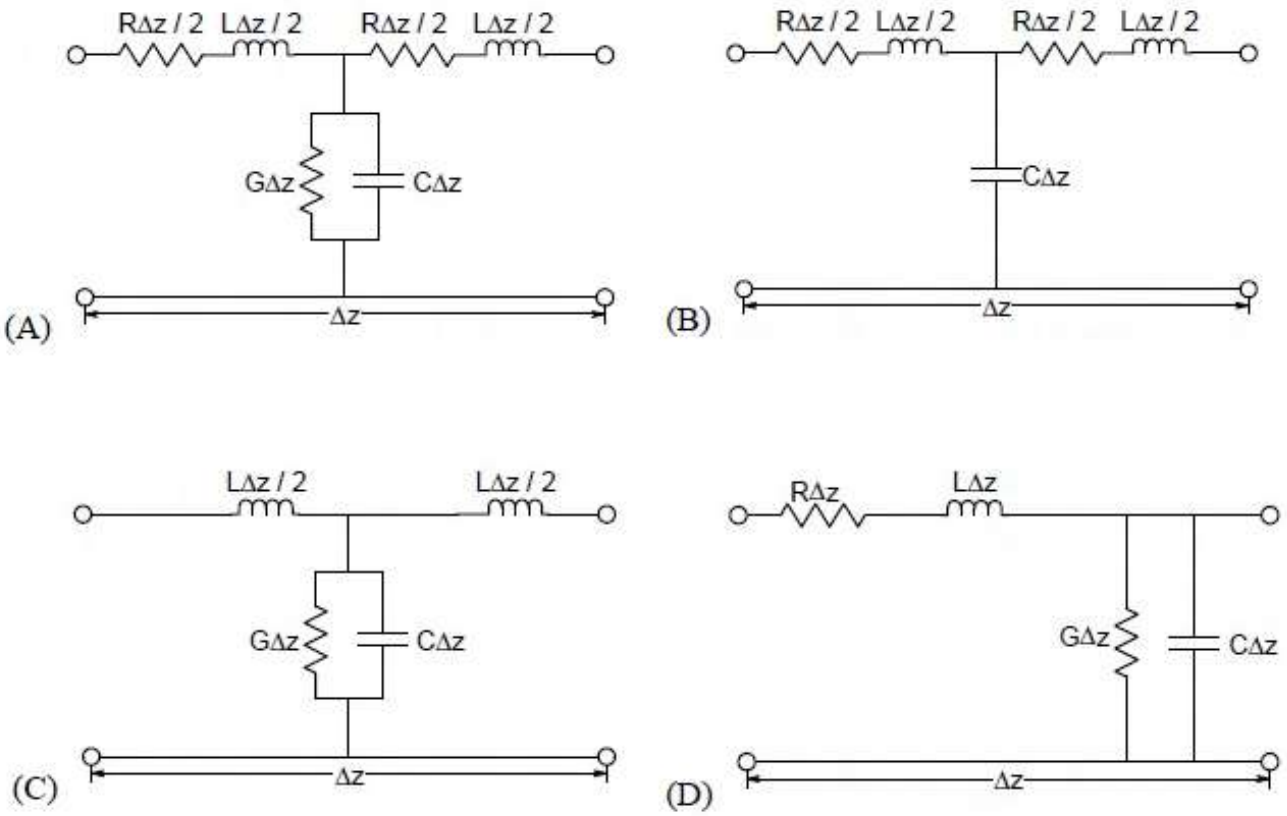

Options :

1. ✖ A

2. ✔ B

3. ✖ C

4. ✖ D

Question Number : 36 Question Type : NAT

The Newton-Raphson method is used to solve the equation $f(x) = x^3 - 5x^2 + 6x - 8 = 0$. Taking the initial guess as $x = 5$, the solution obtained at the end of the first iteration is _____.

Correct Answer :

4.25 to 4.35

Question Number : 37 Question Type : NAT

A fair die with faces {1, 2, 3, 4, 5, 6} is thrown repeatedly till '3' is observed for the first time. Let X denote the number of times the die is thrown. The expected value of X is ____.

Correct Answer :

6

Question Number : 38 Question Type : NAT

Consider the differential equation

$$\frac{d^2x(t)}{dt^2} + 3\frac{dx(t)}{dt} + 2x(t) = 0.$$

Given $x(0) = 20$ and $x(1) = 10/e$, where $e = 2.718$, the value of $x(2)$ is _____.

Correct Answer :

0.83 to 0.88

Question Number : 39 Question Type : NAT

A vector field $\mathbf{D} = 2\rho^2\,\mathbf{a}_\rho + z\,\mathbf{a}_z$ exists inside a cylindrical region enclosed by the surfaces $\rho = 1,\ z = 0$ and $z = 5$. Let S be the surface bounding this cylindrical region. The surface integral of this field on $S\left(\oiint_S \mathbf{D}.\mathbf{ds}\right)$ is _____.

Correct Answer :

78 to 79

Question Number : 40 Question Type : NAT

In the circuit shown, the current I flowing through the 50 Ω resistor will be zero if the value of capacitor C (in μF) is _____.

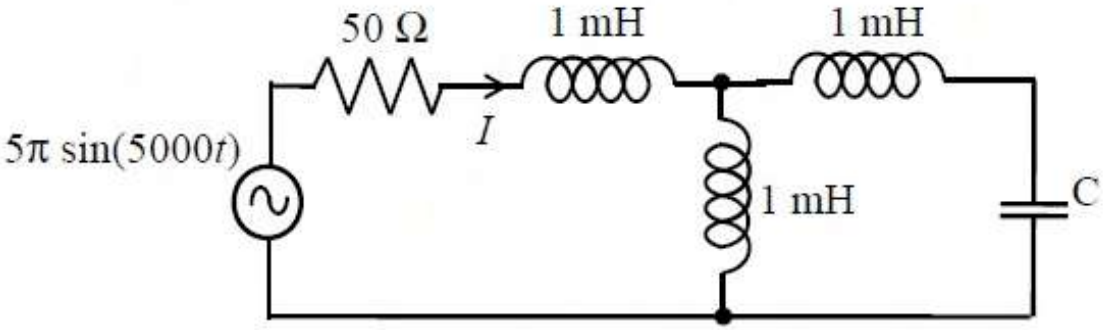

Correct Answer :

20

Question Number : 41 Question Type : MCQ

The ABCD parameters of the following 2-port network are

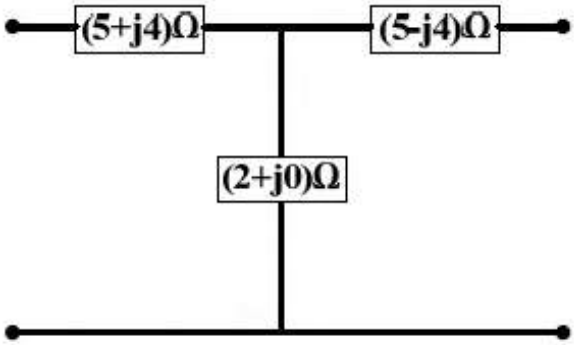

(A) $\begin{bmatrix} 3.5+j2 & 20.5 \\ 20.5 & 3.5-j2 \end{bmatrix}$

(B) $\begin{bmatrix} 3.5+j2 & 30.5 \\ 0.5 & 3.5-j2 \end{bmatrix}$

(C) $\begin{bmatrix} 10 & 2+j0 \\ 2+j0 & 10 \end{bmatrix}$

(D) $\begin{bmatrix} 7+j4 & 0.5 \\ 30.5 & 7-j4 \end{bmatrix}$

Options :

1. ✖ A
2. ✔ B
3. ✖ C
4. ✖ D

Question Number : 42 Question Type : MCQ

A network is described by the state model as

$$\dot{x}_1 = 2\,x_1 - x_2 + 3u$$
$$\dot{x}_2 = -4x_2 - u$$
$$y = 3x_1 - 2x_2$$

The transfer function $H(s)\ \left(=\frac{Y(s)}{U(s)}\right)$ is

(A) $\frac{11s+35}{(s-2)(s+4)}$

(B) $\frac{11s-35}{(s-2)(s+4)}$

(C) $\frac{11s+38}{(s-2)(s+4)}$

(D) $\frac{11s-38}{(s-2)(s+4)}$

Options :

1. ✔ A
2. ✖ B
3. ✖ C
4. ✖ D

Question Number : 43 Question Type : MCQ

The electric field profile in the depletion region of a p-n junction in equilibrium is shown in the figure. Which one of the following statements is **NOT TRUE**?

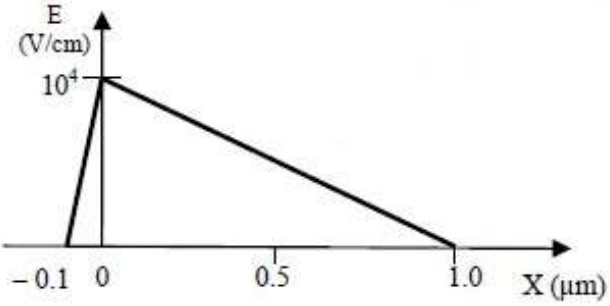

(A) The left side of the junction is n-type and the right side is p-type

(B) Both the n-type and p-type depletion regions are uniformly doped

(C) The potential difference across the depletion region is 700 mV

(D) If the p-type region has a doping concentration of 10^{15} cm^{-3}, then the doping concentration in the n-type region will be 10^{16} cm^{-3}

Options :

1. ✖ A
2. ✖ B
3. ✔ C
4. ✖ D

Question Number : 44 Question Type : NAT

The current in an enhancement mode NMOS transistor biased in saturation mode was measured to be 1 mA at a drain-source voltage of 5 V. When the drain-source voltage was increased to 6 V while keeping gate-source voltage same, the drain current increased to 1.02 mA. Assume that drain to source saturation voltage is much smaller than the applied drain-source voltage. The channel length modulation parameter λ (in V^{-1}) is _____.

Correct Answer :
0.018 to 0.026

Question Number : 45 Question Type : NAT

An npn BJT having reverse saturation current $I_S = 10^{-15}$ A is biased in the forward active region with $V_{BE} = 700$ mV. The thermal voltage (V_T) is 25 mV and the current gain (β) may vary from 50 to 150 due to manufacturing variations. The maximum emitter current (in μA) is _____.

Correct Answer :
1465 to 1485

Question Number : 46 Question Type : MCQ

A three bit pseudo random number generator is shown. Initially the value of output $Y \equiv Y_2\, Y_1\, Y_0$ is set to 111. The value of output Y after three clock cycles is

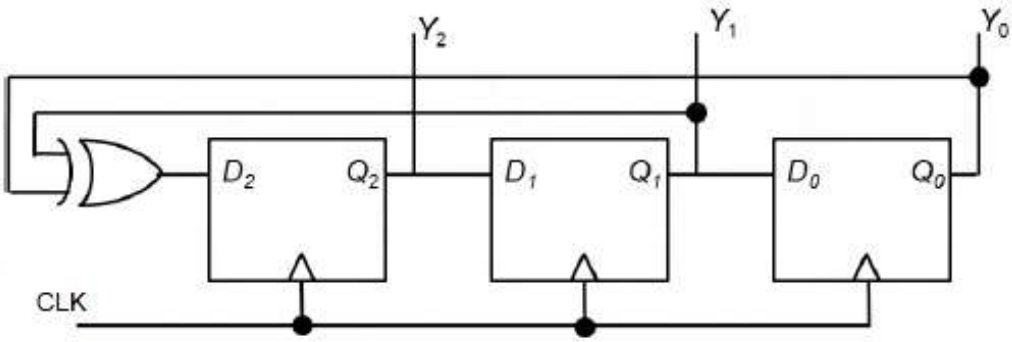

(A) 000 (B) 001 (C) 010 (D) 100

Options :
1. ✖ A
2. ✖ B
3. ✖ C
4. ✔ D

Question Number : 47 Question Type : MCQ

A universal logic gate can implement any Boolean function by connecting sufficient number of them appropriately. Three gates are shown.

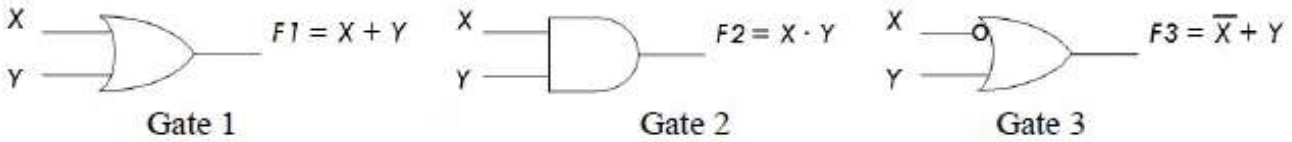

Gate 1 Gate 2 Gate 3

Which one of the following statements is TRUE?

(A) Gate 1 is a universal gate.
(B) Gate 2 is a universal gate.
(C) Gate 3 is a universal gate.
(D) None of the gates shown is a universal gate.

Options :

1. ✖ A
2. ✖ B
3. ✔ C
4. ✖ D

Question Number : 48 Question Type : MCQ

An SR latch is implemented using TTL gates as shown in the figure. The set and reset pulse inputs are provided using the push-button switches. It is observed that the circuit fails to work as desired. The SR latch can be made functional by changing

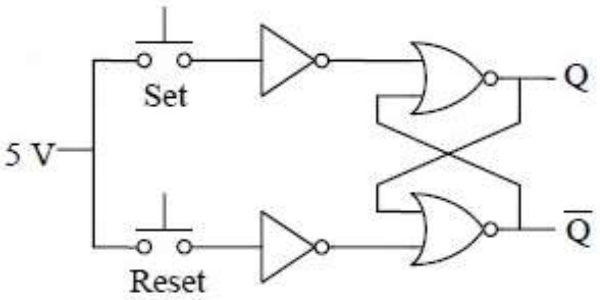

(A) NOR gates to NAND gates

(B) inverters to buffers

(C) NOR gates to NAND gates and inverters to buffers

(D) 5 V to ground

Options :

1. ✖ A
2. ✖ B
3. ✖ C
4. ✔ D

Question Number : 49 Question Type : NAT

In the circuit shown, assume that the opamp is ideal. If the gain (v_o / v_{in}) is −12, the value of R (in kΩ) is _____.

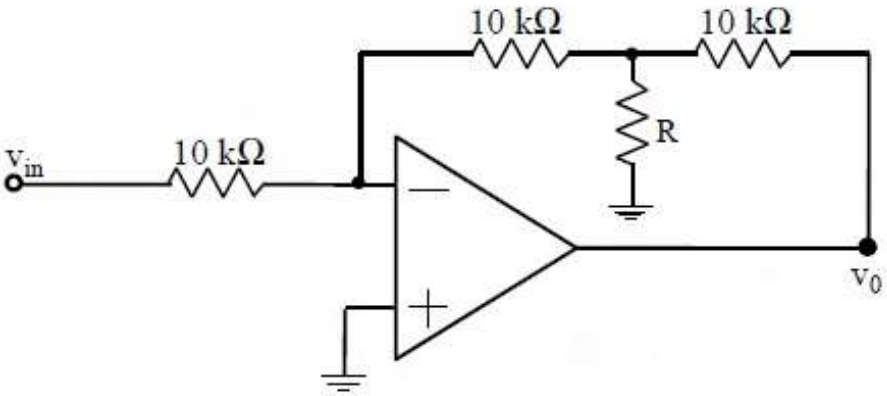

Correct Answer :

1

Question Number : 50 Question Type : NAT

In the circuit shown, both the enhancement mode NMOS transistors have the following characteristics: $k_n = \mu_n C_{ox}(W/L) = 1\,mA/V^2$; $V_{TN} = 1V$. Assume that the channel length modulation parameter λ is zero and body is shorted to source. The minimum supply voltage V_{DD} (in volts) needed to ensure that transistor M_1 operates in saturation mode of operation is _____.

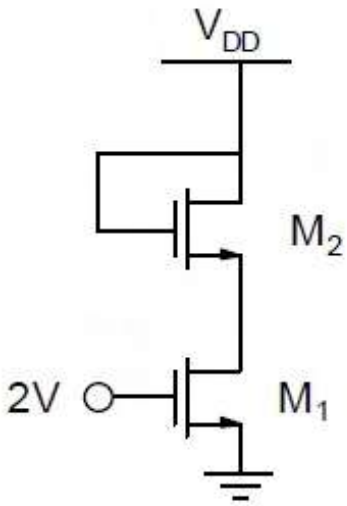

Correct Answer :

2.9 to 3.1

Question Number : 51 Question Type : NAT

In the circuit shown, assume that the diodes D_1 and D_2 are ideal. The average value of voltage V_{ab} (in Volts), across terminals '**a**' and '**b**' is _____.

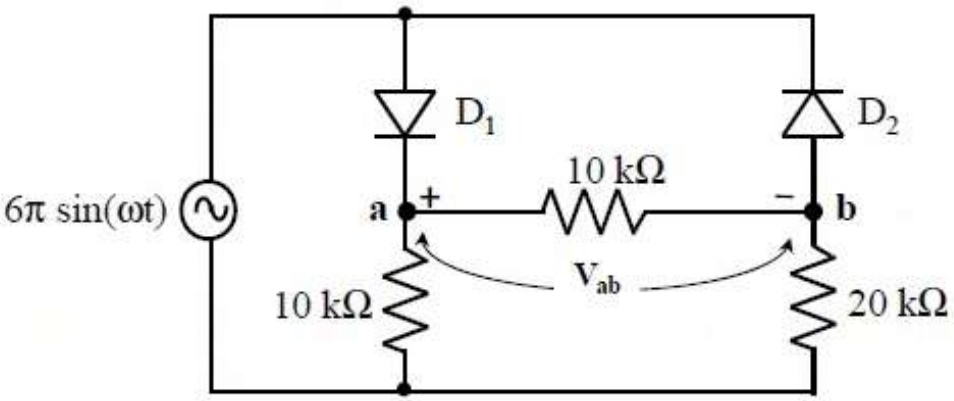

Correct Answer :

4.85 to 5.15

Question Number : 52 Question Type : MCQ

Suppose $x[n]$ is an absolutely summable discrete-time signal. Its z-transform is a rational function with two poles and two zeroes. The poles are at $z = \pm 2j$. Which one of the following statements is TRUE for the signal $x[n]$?

(A) It is a finite duration signal.
(B) It is a causal signal.
(C) It is a non-causal signal.
(D) It is a periodic signal.

Options :

1. ✖ A
2. ✖ B
3. ✔ C
4. ✖ D

Question Number : 53 Question Type : MCQ

A realization of a stable discrete time system is shown in the figure. If the system is excited by a unit step sequence input $x[n]$, the response $y[n]$ is

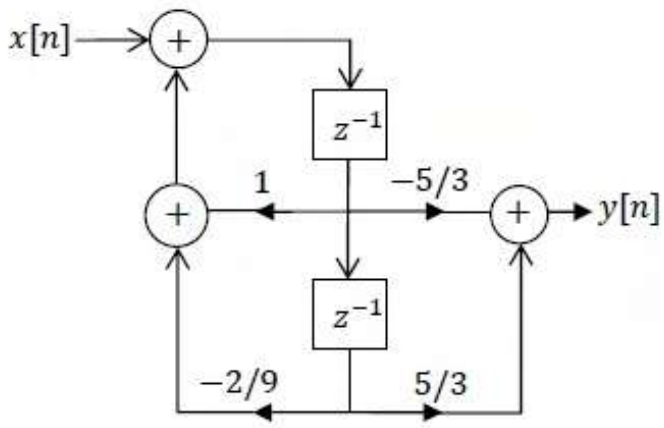

(A) $4\left(-\frac{1}{3}\right)^n u[n]-5\left(-\frac{2}{3}\right)^n u[n]$

(B) $5\left(-\frac{2}{3}\right)^n u[n]-3\left(-\frac{1}{3}\right)^n u[n]$

(C) $5\left(\frac{1}{3}\right)^n u[n]-5\left(\frac{2}{3}\right)^n u[n]$

(D) $5\left(\frac{2}{3}\right)^n u[n]-5\left(\frac{1}{3}\right)^n u[n]$

Options :

1. ✖ A
2. ✖ B
3. ✔ C
4. ✖ D

Question Number : 54 Question Type : NAT

Let $\tilde{x}[n] = 1 + \cos\left(\frac{\pi n}{8}\right)$ be a periodic signal with period 16. Its DFS coefficients are defined by $a_k = \frac{1}{16}\sum_{n=0}^{15}\tilde{x}[n]\exp(-j\frac{\pi}{8}kn)$ for all k. The value of the coefficient a_{31} is _____.

Correct Answer :

0.48 to 0.52

Question Number : 55 Question Type : NAT

Consider a continuous-time signal defined as

$$x(t) = \left(\frac{\sin(\pi t/2)}{(\pi t/2)}\right) * \sum_{n=-\infty}^{\infty} \delta(t-10n)$$

where '$*$' denotes the convolution operation and t is in seconds. The Nyquist sampling rate (in samples/sec) for $x(t)$ is _____.

Correct Answer :
0.39 to 0.41

Question Number : 56 Question Type : NAT

The position control of a DC servo-motor is given in the figure. The values of the parameters are $K_T = 1$ N-m/A, $R_a = 1\Omega$, $L_a = 0.1$H, $J = 5$kg-m^2, $B = 1$ N-m/(rad/sec) and $K_b = 1$V/(rad/sec). The steady-state position response (in radians) due to unit impulse disturbance torque T_d is _____.

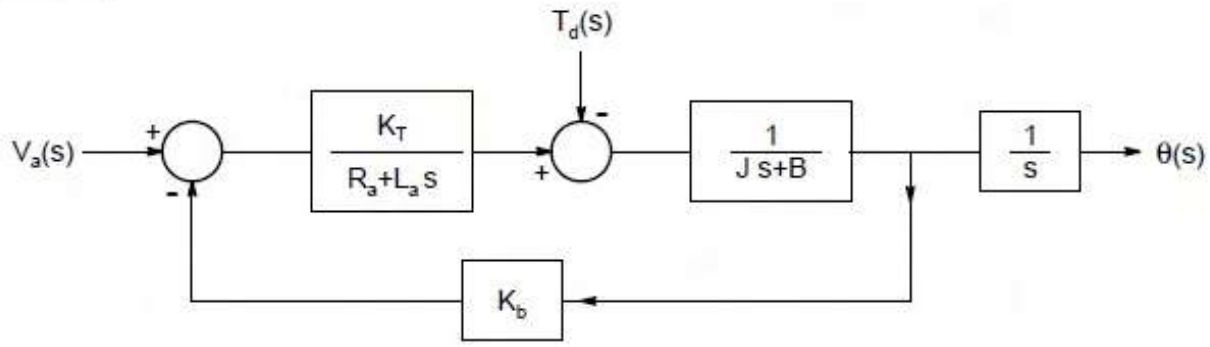

Correct Answer :
-0.51 to -0.49

Question Number : 57 Question Type : NAT

For the system shown in the figure, $s = -2.75$ lies on the root locus if K is _____.

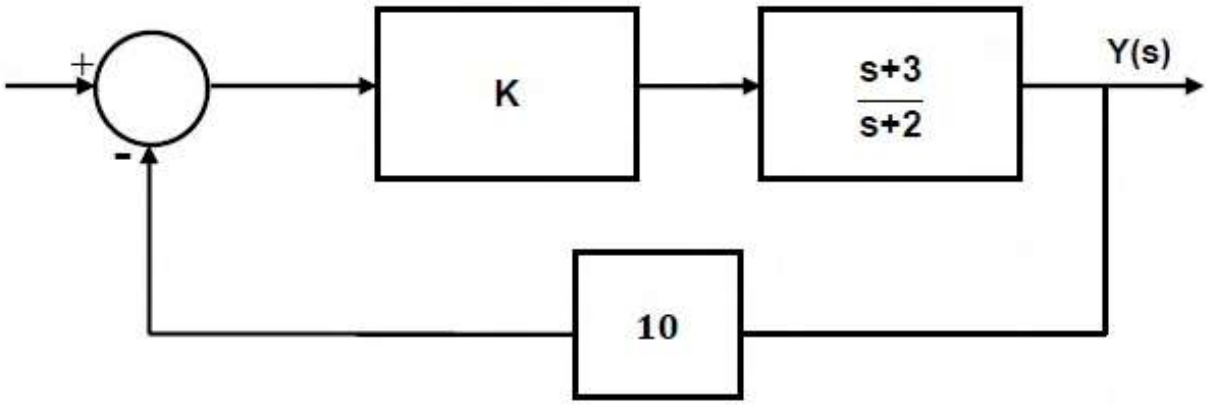

Correct Answer :
0.29 to 0.31

Question Number : 58 Question Type : NAT

The characteristic equation of an LTI system is given by $F(s) = s^5 + 2s^4 + 3s^3 + 6s^2 - 4s - 8 = 0$. The number of roots that lie strictly in the left half s-plane is _____.

Correct Answer :
2

Question Number : 59 Question Type : NAT

Two sequences $x_1[n]$ and $x_2[n]$ have the same energy. Suppose $x_1[n] = \alpha\, 0.5^n\, u[n]$, where α is a positive real number and $u[n]$ is the unit step sequence. Assume

$$x_2[n] = \begin{cases} \sqrt{1.5} & \text{for } n = 0, 1 \\ 0 & \text{otherwise.} \end{cases}$$

Then the value of α is _____.

Correct Answer :
1.49 to 1.51

Question Number : 60 Question Type : NAT

The variance of the random variable X with probability density function $f(x) = \frac{1}{2}|x|e^{-|x|}$ is

_____.

Correct Answer :
6

Question Number : 61 Question Type : MCQ

The complex envelope of the bandpass signal $x(t) = -\sqrt{2}\left(\frac{\sin(\pi t/5)}{\pi t/5}\right)\sin(\pi t - \frac{\pi}{4})$, centered about $f = \frac{1}{2}$ Hz, is

(A) $\left(\frac{\sin(\pi t/5)}{\pi t/5}\right)e^{j\frac{\pi}{4}}$

(B) $\left(\frac{\sin(\pi t/5)}{\pi t/5}\right)e^{-j\frac{\pi}{4}}$

(C) $\sqrt{2}\left(\frac{\sin(\pi t/5)}{\pi t/5}\right)e^{j\frac{\pi}{4}}$

(D) $\sqrt{2}\left(\frac{\sin(\pi t/5)}{\pi t/5}\right)e^{-j\frac{\pi}{4}}$

Options :
1. ✖ A
2. ✖ B
3. ✔ C
4. ✖ D

Question Number : 62 Question Type : NAT

A random binary wave $y(t)$ is given by

$$y(t) = \sum_{n=-\infty}^{\infty} X_n \, p(t - nT - \phi)$$

where $p(t) = u(t) - u(t-T)$, $u(t)$ is the unit step function and ϕ is an independent random variable with uniform distribution in $[0,T]$. The sequence $\{X_n\}$ consists of independent and identically distributed binary valued random variables with $P\{X_n = +1\} = P\{X_n = -1\} = 0.5$ for each n.

The value of the autocorrelation $R_{yy}\left(\frac{3T}{4}\right) \triangleq E\left[y(t)y\left(t - \frac{3T}{4}\right)\right]$ equals _____.

Correct Answer :

0.24 to 0.26

Question Number : 63 Question Type : MCQ

Consider the 3 m long lossless air-filled transmission line shown in the figure. It has a characteristic impedance of $120\pi\ \Omega$, is terminated by a short circuit, and is excited with a frequency of 37.5 MHz. What is the nature of the input impedance (Z_{in})?

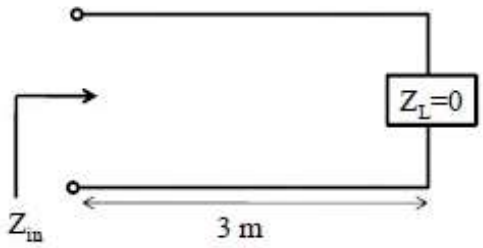

(A) Open (B) Short (C) Inductive (D) Capacitive

Options :

1. ✖ A
2. ✖ B
3. ✖ C
4. ✔ D

Question Number : 64 Question Type : NAT

A 200 m long transmission line having parameters shown in the figure is terminated into a load R_L. The line is connected to a 400 V source having source resistance R_S through a switch, which is closed at t = 0. The transient response of the circuit at the input of the line (z = 0) is also drawn in the figure. The value of R_L (in Ω) is _____.

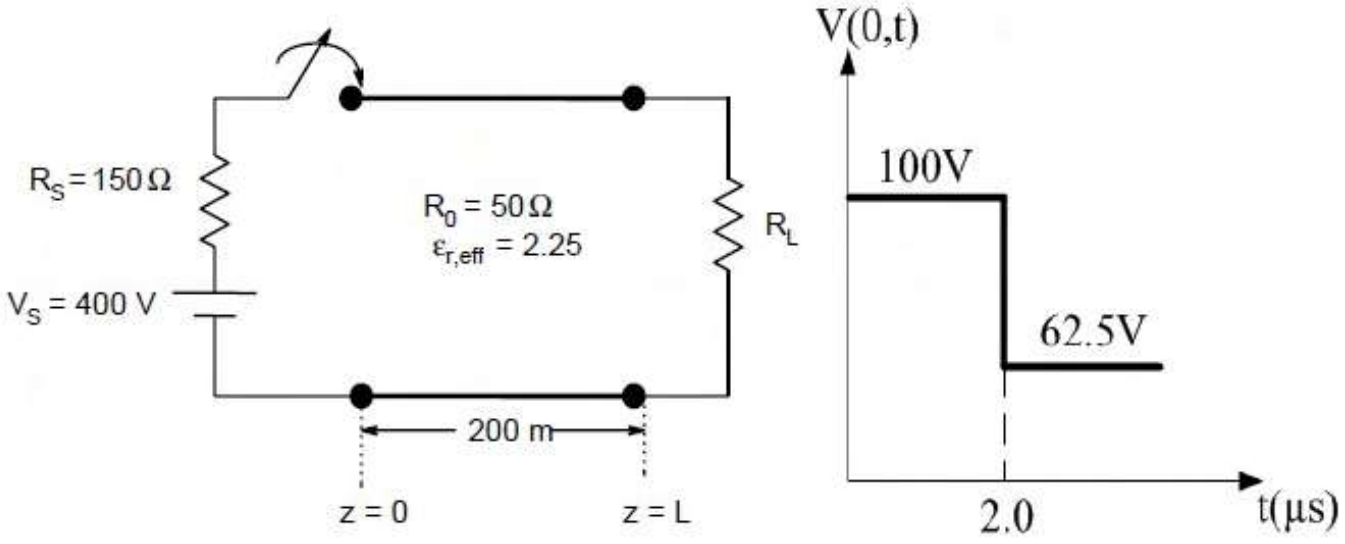

Correct Answer :
29 to 31

Question Number : 65 Question Type : NAT

A coaxial capacitor of inner radius 1 mm and outer radius 5 mm has a capacitance per unit length of 172 pF/m. If the ratio of outer radius to inner radius is doubled, the capacitance per unit length (in pF/m) is _____.

Correct Answer :
120.0 to 120.4