SESSION - 1

Graduate Aptitude Test in Engineering 2017

Question Paper Name: Electronics and Communication Engineering 5th Feb 2017 session1
Subject Name: Electronics and Communication Engineering
Duration: 180
Total Marks: 100

Organizing Institute:
Indian Institute of Technology Roorkee

Question Number : 1 Correct : 1 Wrong : -0.33

Consider the 5×5 matrix

$$A = \begin{bmatrix} 1 & 2 & 3 & 4 & 5 \\ 5 & 1 & 2 & 3 & 4 \\ 4 & 5 & 1 & 2 & 3 \\ 3 & 4 & 5 & 1 & 2 \\ 2 & 3 & 4 & 5 & 1 \end{bmatrix}.$$

It is given that $\boldsymbol{A}$ has only one real eigenvalue. Then the real eigenvalue of $\boldsymbol{A}$ is

(A) -2.5 (B) 0 (C) 15 (D) 25

Question Number : 2 Correct : 1 Wrong : -0.33

The rank of the matrix $\mathbf{M} = \begin{bmatrix} 5 & 10 & 10 \\ 1 & 0 & 2 \\ 3 & 6 & 6 \end{bmatrix}$ is

(A) 0 (B) 1 (C) 2 (D) 3

Question Number : 3 Correct : 1 Wrong : -0.33

Consider the following statements about the linear dependence of the real valued functions $y_1 = 1$, $y_2 = x$ and $y_3 = x^2$, over the field of real numbers.

I. y_1, y_2 and y_3 are linearly independent on $-1 \le x \le 0$
II. y_1, y_2 and y_3 are linearly dependent on $0 \le x \le 1$
III. y_1, y_2 and y_3 are linearly independent on $0 \le x \le 1$
IV. y_1, y_2 and y_3 are linearly dependent on $-1 \le x \le 0$

Which one among the following is correct?

(A) Both I and II are true
(B) Both I and III are true
(C) Both II and IV are true
(D) Both III and IV are true

Question Number : 4 **Correct : 1 Wrong : 0**

Three fair cubical dice are thrown simultaneously. The probability that all three dice have the same number of dots on the faces showing up is (up to third decimal place) _____.

Question Number : 5 **Correct : 1 Wrong : -0.33**

Consider the following statements for continuous-time linear time invariant (LTI) systems.

I. There is no bounded input bounded output (BIBO) stable system with a pole in the right half of the complex plane.
II. There is no causal and BIBO stable system with a pole in the right half of the complex plane.

Which one among the following is correct?

(A) Both I and II are true
(B) Both I and II are not true
(C) Only I is true
(D) Only II is true

Question Number : 6 **Correct : 1 Wrong : -0.33**

Consider a single input single output discrete-time system with $x[n]$ as input and $y[n]$ as output, where the two are related as

$$y[n] = \begin{cases} n|x[n]|, & \text{for } 0 \le n \le 10 \\ x[n] - x[n-1], & \text{otherwise.} \end{cases}$$

Which one of the following statements is true about the system?

(A) It is causal and stable
(B) It is causal but not stable
(C) It is not causal but stable
(D) It is neither causal nor stable

Question Number : 7 **Correct : 1 Wrong : 0**

In the circuit shown, the positive angular frequency ω (in radians per second) at which the magnitude of the phase difference between the voltages V_1 and V_2 equals $\frac{\pi}{4}$ radians, is _____.

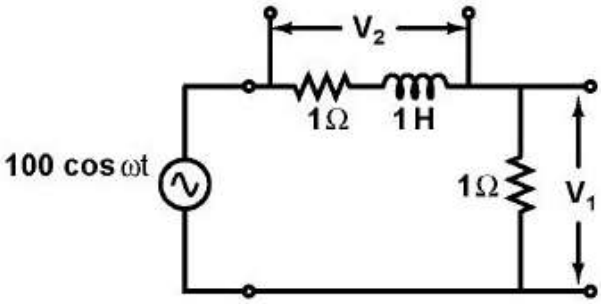

Question Number : 8 Correct : 1 Wrong : -0.33

A periodic signal $x(t)$ has a trigonometric Fourier series expansion

$$x(t) = a_0 + \sum_{n=1}^{\infty} (a_n \cos n\omega_0 t + b_n \sin n\omega_0 t)$$

If $x(t) = -x(-t) = -x(t - \pi/\omega_0)$, we can conclude that

(A) a_n are zero for all n and b_n are zero for n even
(B) a_n are zero for all n and b_n are zero for n odd
(C) a_n are zero for n even and b_n are zero for n odd
(D) a_n are zero for n odd and b_n are zero for n even

Question Number : 9 Correct : 1 Wrong : -0.33

A bar of Gallium Arsenide (GaAs) is doped with Silicon such that the Silicon atoms occupy Gallium and Arsenic sites in the GaAs crystal. Which one of the following statements is true?

(A) Silicon atoms act as p-type dopants in Arsenic sites and n-type dopants in Gallium sites
(B) Silicon atoms act as n-type dopants in Arsenic sites and p-type dopants in Gallium sites
(C) Silicon atoms act as p-type dopants in Arsenic as well as Gallium sites
(D) Silicon atoms act as n-type dopants in Arsenic as well as Gallium sites

Question Number : 10 Correct : 1 Wrong : -0.33

An n^+-n Silicon device is fabricated with uniform and non-degenerate donor doping concentrations of $N_{D1} = 1 \times 10^{18}\ \text{cm}^{-3}$ and $N_{D2} = 1 \times 10^{15}\ \text{cm}^{-3}$ corresponding to the n^+ and n regions respectively. At the operational temperature T, assume complete impurity ionization, $kT/q =$ 25 mV, and intrinsic carrier concentration to be $n_i = 1 \times 10^{10}\ \text{cm}^{-3}$. What is the magnitude of the built-in potential of this device?

(A) 0.748 V (B) 0.460 V (C) 0.288 V (D) 0.173 V

Question Number : 11 Correct : 1 Wrong : -0.33

For a narrow base PNP BJT, the excess minority carrier concentrations (Δn_E for emitter, Δp_B for base, Δn_C for collector) normalized to equilibrium minority carrier concentrations (n_{E0} for emitter, p_{B0} for base, n_{C0} for collector) in the quasi-neutral emitter, base and collector regions are shown below. Which one of the following biasing modes is the transistor operating in?

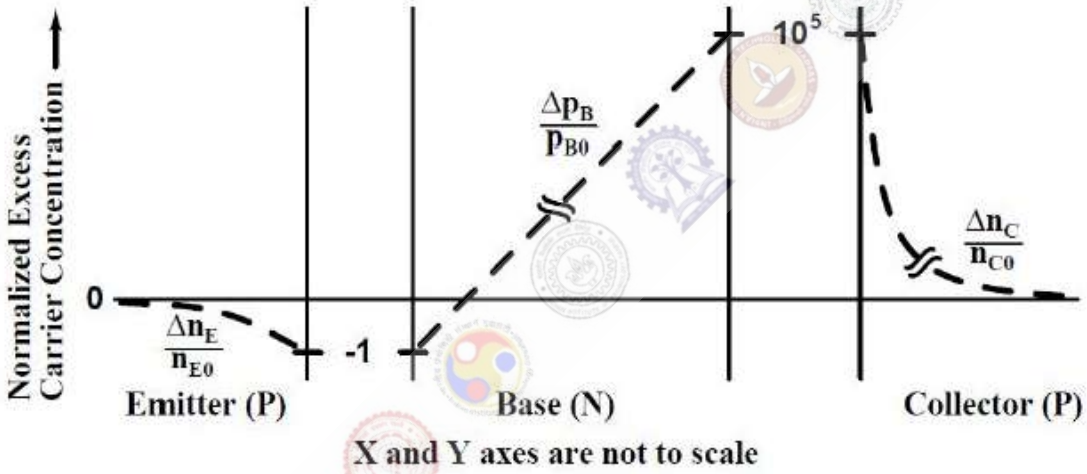

(A) Forward active (B) Saturation (C) Inverse active (D) Cutoff

Question Number : 12 Correct : 1 Wrong : -0.33

For the operational amplifier circuit shown, the output saturation voltages are $\pm$ 15 V. The upper and lower threshold voltages for the circuit are, respectively,

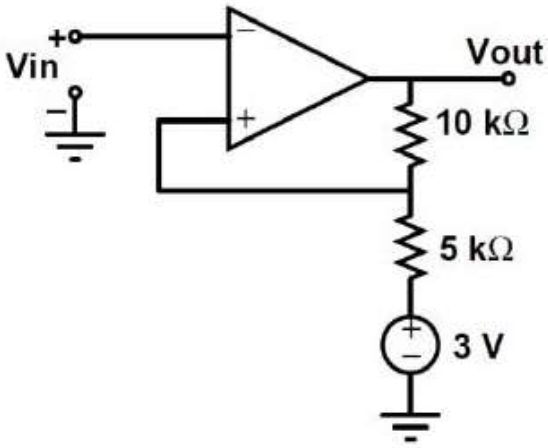

(A) +5 V and -5 V (B) +7 V and -3 V (C) +3 V and -7 V (D) +3 V and -3 V

Question Number : 13 **Correct : 1 Wrong : -0.33**

A good transconductance amplifier should have

(A) high input resistance and low output resistance
(B) low input resistance and high output resistance
(C) high input and output resistances
(D) low input and output resistances

Question Number : 14 **Correct : 1 Wrong : -0.33**

The Miller effect in the context of a Common Emitter amplifier explains

(A) an increase in the low-frequency cutoff frequency
(B) an increase in the high-frequency cutoff frequency
(C) a decrease in the low-frequency cutoff frequency
(D) a decrease in the high-frequency cutoff frequency

Question Number : 15 **Correct : 1 Wrong : -0.33**

In the latch circuit shown, the NAND gates have non-zero, but unequal propagation delays. The present input condition is: P = Q = '0'. If the input condition is changed simultaneously to P = Q = '1', the outputs X and Y are

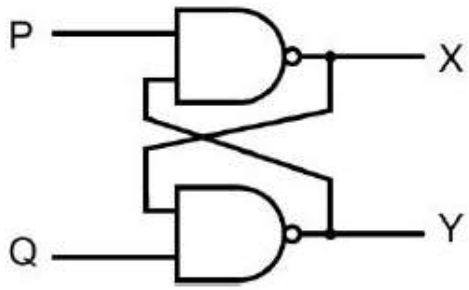

(A) X = '1', Y = '1'

(B) either X = '1', Y = '0' or X = '0', Y = '1'

(C) either X = '1', Y = '1' or X = '0', Y = '0'

(D) X = '0', Y = '0'

Question Number : 16 **Correct : 1 Wrong : -0.33**

The clock frequency of an 8085 microprocessor is 5 MHz. If the time required to execute an instruction is 1.4 μs, then the number of T-states needed for executing the instruction is

(A) 1 (B) 6 (C) 7 (D) 8

Question Number : 17 **Correct : 1 Wrong : 0**

Consider the D-Latch shown in the figure, which is transparent when its clock input CK is high and has zero propagation delay. In the figure, the clock signal CLK1 has a 50% duty cycle and CLK2 is a one-fifth period delayed version of CLK1. The duty cycle at the output of the latch in percentage is _____.

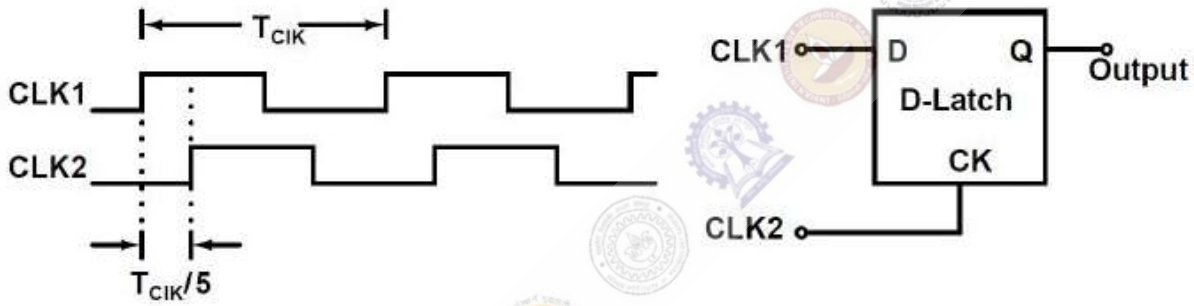

Question Number : 18 **Correct : 1 Wrong : 0**

The open loop transfer function

$$G(s) = \frac{(s+1)}{s^p(s+2)(s+3)}$$

where p is an integer, is connected in unity feedback configuration as shown in the figure.

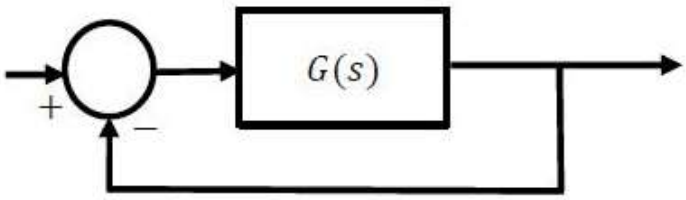

Given that the steady state error is zero for unit step input and is 6 for unit ramp input, the value of the parameter p is _____.

Question Number : 19 Correct : 1 Wrong : -0.33

Consider a stable system with transfer function

$$G(s) = \frac{s^p + b_1 s^{p-1} + \cdots + b_p}{s^q + a_1 s^{q-1} + \cdots + a_q}$$

where $b_1, \ldots, b_p$ and $a_1, \ldots, a_q$ are real valued constants. The slope of the Bode log magnitude curve of $G(s)$ converges to -60 dB/decade as $\omega \to \infty$. A possible pair of values for p and q is

(A) $p = 0$ and $q = 3$

(B) $p = 1$ and $q = 7$

(C) $p = 2$ and $q = 3$

(D) $p = 3$ and $q = 5$

Question Number : 20 Correct : 1 Wrong : -0.33

Which of the following can be the pole-zero configuration of a phase-lag controller (lag compensator)?

(A)

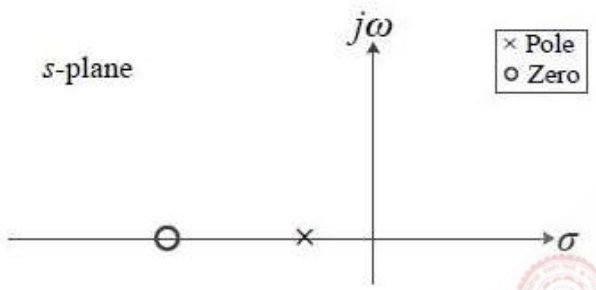

(B)

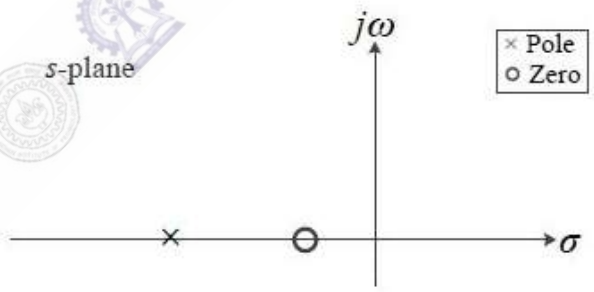

(C)

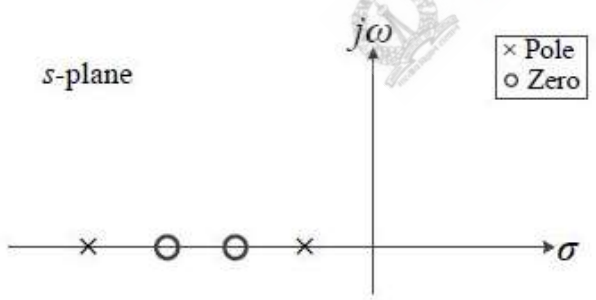

(D)

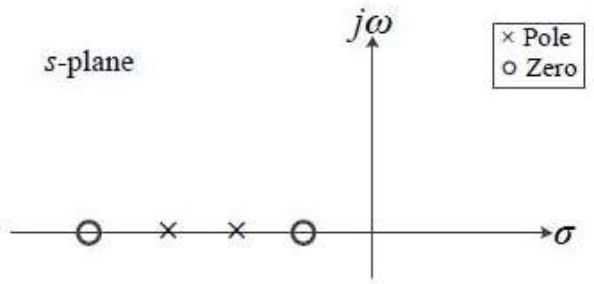

Question Number : 21 Correct : 1 Wrong : 0

Let (X_1, X_2) be independent random variables. X_1 has mean 0 and variance 1, while X_2 has mean 1 and variance 4. The mutual information $I(X_1; X_2)$ between X_1 and X_2 in bits is _____.

Question Number : 22 **Correct : 1 Wrong : -0.33**

Which one of the following statements about differential pulse code modulation (DPCM) is true?

(A) The sum of message signal sample with its prediction is quantized
(B) The message signal sample is directly quantized, and its prediction is not used
(C) The difference of message signal sample and a random signal is quantized
(D) The difference of message signal sample with its prediction is quantized

Question Number : 23 **Correct : 1 Wrong : -0.33**

In a digital communication system, the overall pulse shape $p(t)$ at the receiver before the sampler has the Fourier transform $P(f)$. If the symbols are transmitted at the rate of 2000 symbols per second, for which of the following cases is the inter symbol interference zero?

(A)

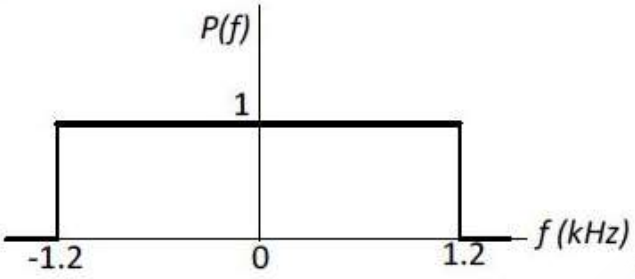

(B)

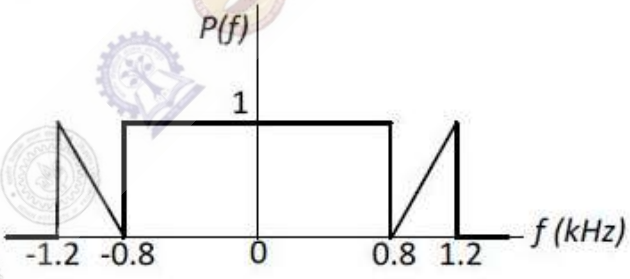

(C)

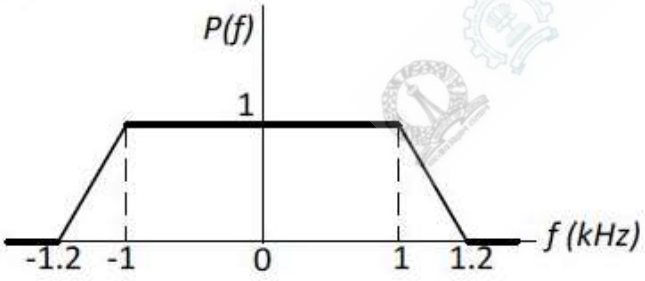

(D)

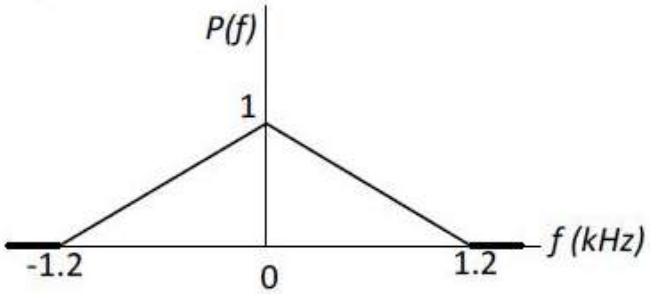

uestion Number : 24 **Correct : 1 Wrong : 0**

The voltage of an electromagnetic wave propagating in a coaxial cable with uniform characteristic impedance is $V(l) = e^{-\gamma l + j\omega t}$ Volts, where l is the distance along the length of the cable in metres, $\gamma = (0.1 + j40)\ \mathrm{m}^{-1}$ is the complex propagation constant, and $\omega = 2\pi \times 10^9$ rad/s is the angular frequency. The absolute value of the attenuation in the cable in dB/metre is _____.

Question Number : 25 **Correct : 1 Wrong : -0.33**

Consider a wireless communication link between a transmitter and a receiver located in free space, with finite and strictly positive capacity. If the effective areas of the transmitter and the receiver antennas, and the distance between them are all doubled, and everything else remains unchanged, the maximum capacity of the wireless link

(A) increases by a factor of 2
(B) decreases by a factor of 2
(C) remains unchanged
(D) decreases by a factor of $\sqrt{2}$

Question Number : 26 **Correct : 2 Wrong : -0.66**

Let $f(x) = e^{x+x^2}$ for real x. From among the following, choose the Taylor series approximation of $f(x)$ around $x = 0$, which includes all powers of x less than or equal to 3.

(A) $1 + x + x^2 + x^3$
(B) $1 + x + \frac{3}{2}x^2 + x^3$
(C) $1 + x + \frac{3}{2}x^2 + \frac{7}{6}x^3$
(D) $1 + x + 3x^2 + 7x^3$

Question Number : 27 **Correct : 2 Wrong : 0**

A three dimensional region R of finite volume is described by

$$x^2 + y^2 \leq z^3;\ 0 \leq z \leq 1,$$

where x, y, z are real. The volume of R (up to two decimal places) is _____.

Question Number : 28 **Correct : 2 Wrong : 0**

Let $I = \int_C (2z\,dx + 2y\,dy + 2x\,dz)$ where x, y, z are real, and let C be the straight line segment from point A: $(0, 2, 1)$ to point B: $(4, 1, -1)$. The value of I is _____.

Question Number : 29 **Correct : 2 Wrong : -0.66**

Which one of the following is the general solution of the first order differential equation

$$\frac{dy}{dx} = (x + y - 1)^2 ,$$

where x, y are real?

(A) $y = 1 + x + \tan^{-1}(x + c)$, where c is a constant.
(B) $y = 1 + x + \tan(x + c)$, where c is a constant.
(C) $y = 1 - x + \tan^{-1}(x + c)$, where c is a constant.
(D) $y = 1 - x + \tan(x + c)$, where c is a constant.

Question Number : 30 **Correct : 2 Wrong : 0**

Starting with $x = 1$, the solution of the equation $x^3 + x = 1$, after two iterations of Newton-Raphson's method (up to two decimal places) is _____

Question Number : 31 **Correct : 2 Wrong : -0.66**

Let $x(t)$ be a continuous time periodic signal with fundamental period $T = 1$ seconds. Let $\{a_k\}$ be the complex Fourier series coefficients of $x(t)$, where k is integer valued. Consider the following statements about $x(3t)$:

I. The complex Fourier series coefficients of $x(3t)$ are $\{a_k\}$ where k is integer valued
II. The complex Fourier series coefficients of $x(3t)$ are $\{3a_k\}$ where k is integer valued
III. The fundamental angular frequency of $x(3t)$ is 6π rad/s

For the three statements above, which one of the following is correct?

(A) only II and III are true
(B) only I and III are true
(C) only III is true
(D) only I is true

Question Number : 32 **Correct : 2 Wrong : 0**

Two discrete-time signals $x[n]$ and $h[n]$ are both non-zero only for $n = 0, 1, 2$, and are zero otherwise. It is given that

$$x[0] = 1, \qquad x[1] = 2, \qquad x[2] = 1, \qquad h[0] = 1.$$

Let $y[n]$ be the linear convolution of $x[n]$ and $h[n]$. Given that $y[1] = 3$ and $y[2] = 4$, the value of the expression $(10y[3] + y[4])$ is _____.

Question Number : 33 Correct : 2 Wrong : 0

Let $h[n]$ be the impulse response of a discrete-time linear time invariant (LTI) filter. The impulse response is given by

$$h[0] = \frac{1}{3};\ \ h[1] = \frac{1}{3};\ \ h[2] = \frac{1}{3};\ \text{ and }\ h[n] = 0 \text{ for } n < 0 \text{ and } n > 2.$$

Let $H(\omega)$ be the discrete-time Fourier transform (DTFT) of $h[n]$, where ω is the normalized angular frequency in radians. Given that $H(\omega_0) = 0$ and $0 < \omega_0 < \pi$, the value of ω_0 (in radians) is equal to _____.

Question Number : 34 Correct : 2 Wrong : 0

The figure shows an RLC circuit excited by the sinusoidal voltage $100\cos(3t)$ Volts, where t is in seconds. The ratio $\frac{\text{amplitude of } V_2}{\text{amplitude of } V_1}$ is _____.

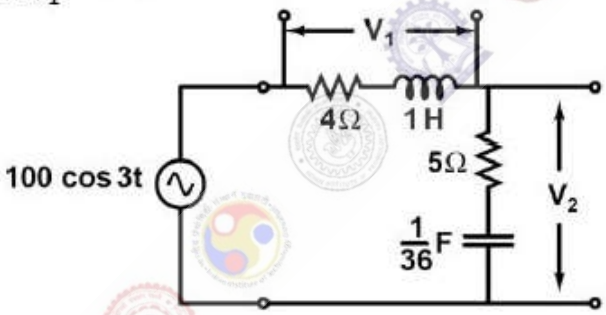

Question Number : 35 Correct : 2 Wrong : 0

In the circuit shown, the voltage $V_{IN}(t)$ is described by:

$$V_{IN}(t) = \begin{cases} 0, & \text{for } t < 0 \\ 15 \text{ Volts}, & \text{for } t \geq 0 \end{cases}$$

where t is in seconds. The time (in seconds) at which the current **I** in the circuit will reach the value 2 Amperes is _____.

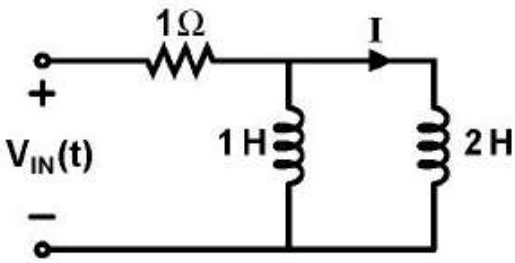

Question Number : 36 **Correct : 2 Wrong : 0**

The dependence of drift velocity of electrons on electric field in a semiconductor is shown below. The semiconductor has a uniform electron concentration of $n = 1 \times 10^{16}\ \text{cm}^{-3}$ and electronic charge $q = 1.6 \times 10^{-19}$ C. If a bias of 5 V is applied across a 1 μm region of this semiconductor, the resulting current density in this region, in kA/cm^2, is _____.

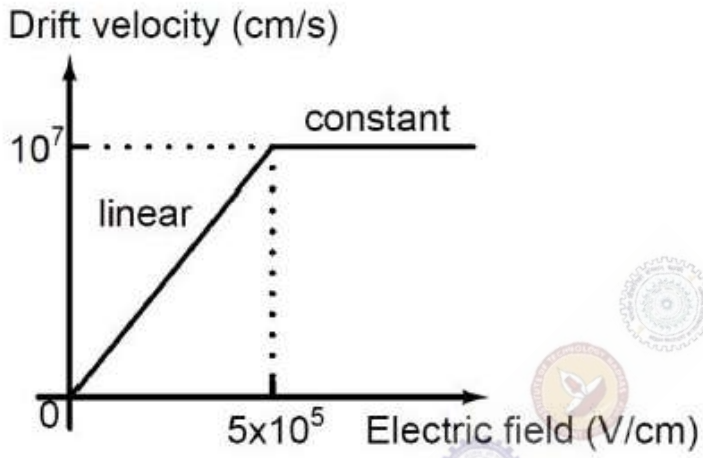

Question Number : 37 **Correct : 2 Wrong : 0**

As shown, a uniformly doped Silicon (Si) bar of length $L = 0.1$ μm with a donor concentration $N_D = 10^{16}\ \text{cm}^{-3}$ is illuminated at $x = 0$ such that electron and hole pairs are generated at the rate of $G_L = G_{L0}\left(1 - \frac{x}{L}\right), 0 \le x \le L$, where $G_{L0} = 10^{17}\ \text{cm}^{-3}\text{s}^{-1}$. Hole lifetime is 10^{-4} s, electronic charge $q = 1.6 \times 10^{-19}$ C, hole diffusion coefficient $D_p = 100\ \text{cm}^2/\text{s}$ and low level injection condition prevails. Assuming a linearly decaying steady state excess hole concentration that goes to 0 at $x = L$, the magnitude of the diffusion current density at $x = L/2$, in A/cm^2, is _____.

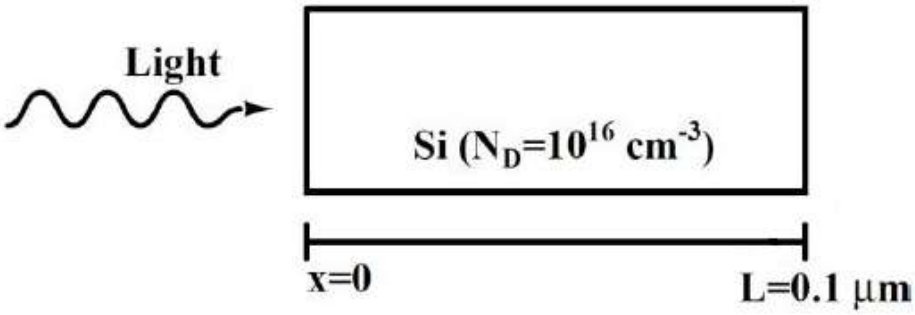

Question Number : 38 Correct : 2 Wrong : 0

As shown, two Silicon (Si) abrupt p-n junction diodes are fabricated with uniform donor doping concentrations of $N_{D1} = 10^{14}\ \text{cm}^{-3}$ and $N_{D2} = 10^{16}\ \text{cm}^{-3}$ in the n-regions of the diodes, and uniform acceptor doping concentrations of $N_{A1} = 10^{14}\ \text{cm}^{-3}$ and $N_{A2} = 10^{16}\ \text{cm}^{-3}$ in the p-regions of the diodes, respectively. Assuming that the reverse bias voltage is $\gg$ built-in potentials of the diodes, the ratio C_2/C_1 of their reverse bias capacitances for the same applied reverse bias, is _____.

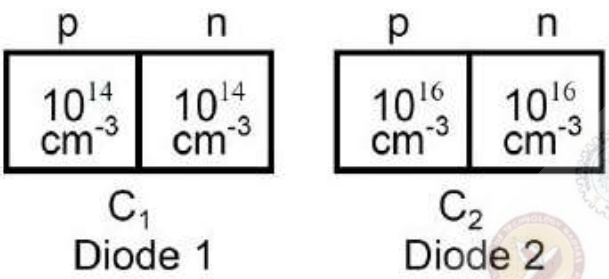

Question Number : 39 Correct : 2 Wrong : 0

In the figure shown, the npn transistor acts as a switch.

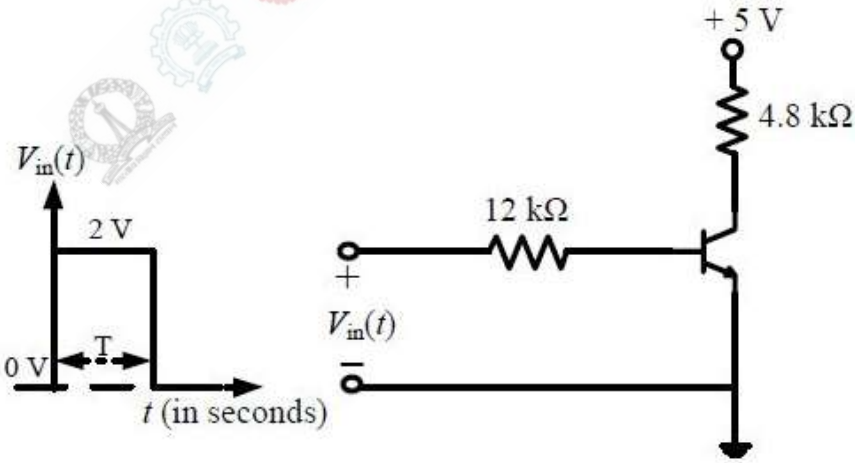

For the input $V_{in}(t)$ as shown in the figure, the transistor switches between the cut-off and saturation regions of operation, when T is large. Assume collector-to-emitter voltage at saturation $V_{CE(sat)} = 0.2\text{V}$ and base-to-emitter voltage $V_{BE} = 0.7\text{V}$. The minimum value of the common-base current gain (α) of the transistor for the switching should be _____.

Question Number : 40 Correct : 2 Wrong : 0

For the circuit shown, assume that the NMOS transistor is in saturation. Its threshold voltage $V_{tn} = 1\ V$ and its transconductance parameter $\mu_n C_{ox}\left(\frac{W}{L}\right) = 1\ mA/V^2$. Neglect channel length modulation and body bias effects. Under these conditions, the drain current I_D in mA is _____.

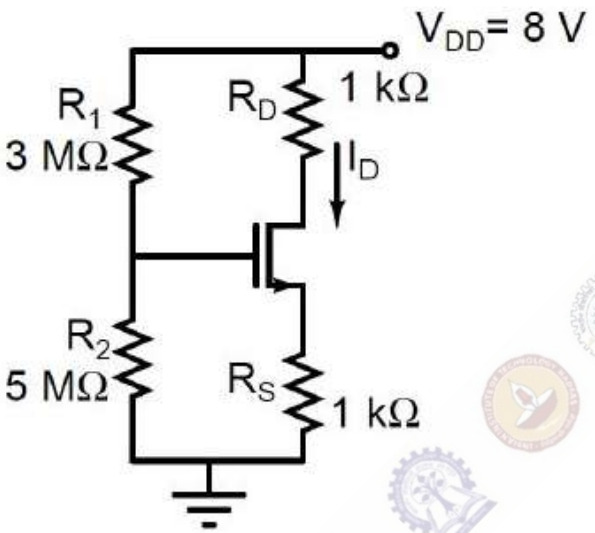

Question Number : 41 Correct : 2 Wrong : 0

For the DC analysis of the Common-Emitter amplifier shown, neglect the base current and assume that the emitter and collector currents are equal. Given that $V_T = 25$ mV, $V_{BE} = 0.7$ V, and the BJT output resistance r_o is practically infinite. Under these conditions, the midband voltage gain magnitude, $A_v = |v_o/v_i|$ V/V, is _____.

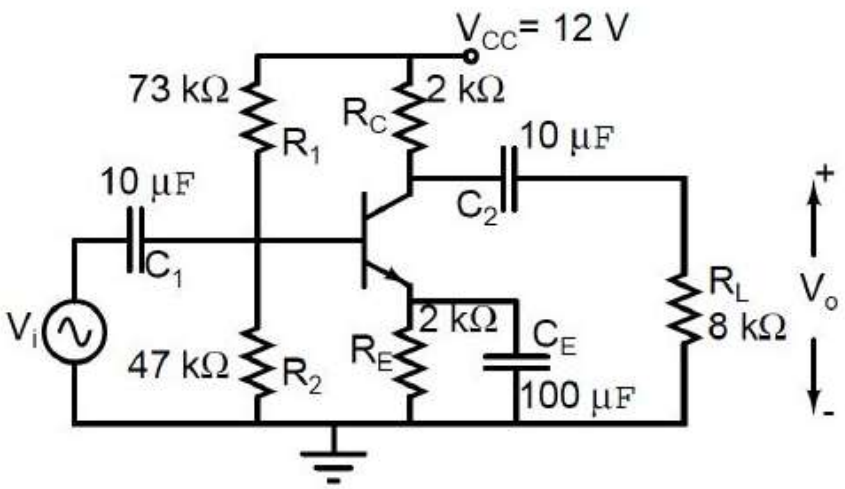

Question Number : 42 **Correct : 2 Wrong : 0**

The amplifier circuit shown in the figure is implemented using a compensated operational amplifier (op-amp), and has an open-loop voltage gain, $A_0 = 10^5$ V/V and an open-loop cut-off frequency, $f_c =$ 8 Hz. The voltage gain of the amplifier at 15 kHz, in V/V, is_____.

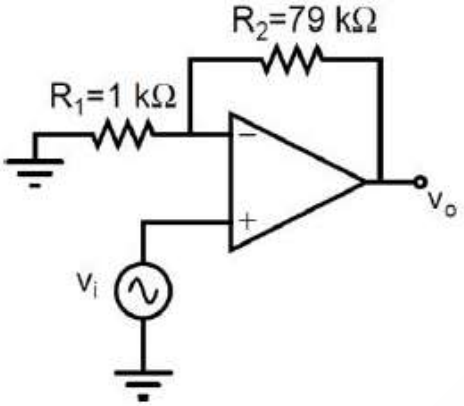

Question Number : 43 **Correct : 2 Wrong : -0.66**

Which one of the following gives the simplified sum of products expression for the Boolean function $F = m_0 + m_2 + m_3 + m_5$, where m_0, m_2, m_3 and m_5 are minterms corresponding to the inputs A, B and C with A as the MSB and C as the LSB?

(A) $\bar{A}B + \bar{A}\bar{B}\bar{C} + A\bar{B}C$
(B) $\bar{A}\bar{C} + \bar{A}B + A\bar{B}C$
(C) $\bar{A}\bar{C} + A\bar{B} + A\bar{B}C$
(D) $\bar{A}BC + \bar{A}\bar{C} + A\bar{B}C$

Question Number : 44 **Correct : 2 Wrong : 0**

A 4-bit shift register circuit configured for right-shift operation, i.e. $D_{in} \rightarrow A,\ A \rightarrow B,\ B \rightarrow C,\ C \rightarrow D$, is shown. If the present state of the shift register is $ABCD = 1101$, the number of clock cycles required to reach the state $ABCD = 1111$ is _____.

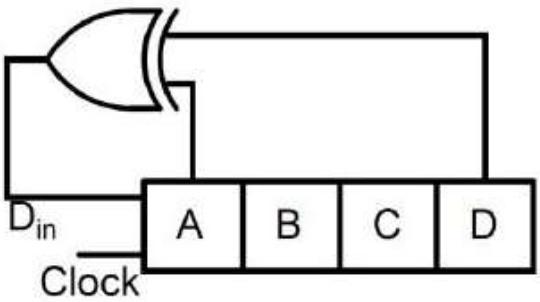

Question Number : 45 **Correct : 2 Wrong : -0.66**

The following FIVE instructions were executed on an 8085 microprocessor.

MVI A, 33H
MVI B, 78H
ADD B
CMA
ANI 32H

The Accumulator value immediately after the execution of the fifth instruction is

(A) 00H (B) 10H (C) 11H (D) 32H

Question Number : 46 **Correct : 2 Wrong : -0.66**

A finite state machine (FSM) is implemented using the D flip-flops A and B, and logic gates, as shown in the figure below. The four possible states of the FSM are $Q_A Q_B = 00, 01, 10$, and 11.

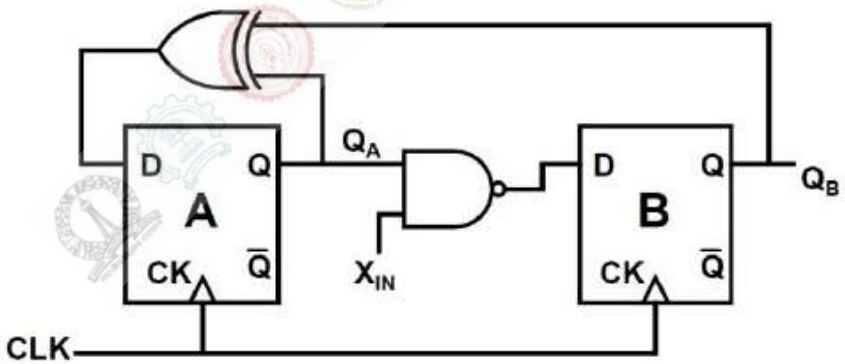

Assume that X_{IN} is held at a constant logic level throughout the operation of the FSM. When the FSM is initialized to the state $Q_A Q_B = 00$ and clocked, after a few clock cycles, it starts cycling through

(A) all of the four possible states if $X_{IN} = 1$
(B) three of the four possible states if $X_{IN} = 0$
(C) only two of the four possible states if $X_{IN} = 1$
(D) only two of the four possible states if $X_{IN} = 0$

Question Number : 47 **Correct : 2 Wrong : -0.66**

A linear time invariant (LTI) system with the transfer function

$$G(s) = \frac{K(s^2 + 2s + 2)}{(s^2 - 3s + 2)}$$

is connected in unity feedback configuration as shown in the figure.

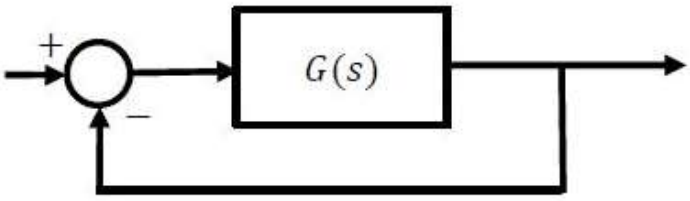

For the closed loop system shown, the root locus for $0 < K < \infty$ intersects the imaginary axis for $K = 1.5$. The closed loop system is stable for

(A) $K > 1.5$
(B) $1 < K < 1.5$
(C) $0 < K < 1$
(D) no positive value of K

Question Number : 48 **Correct : 2 Wrong : -0.66**

Which one of the following options correctly describes the locations of the roots of the equation $s^4 + s^2 + 1 = 0$ on the complex plane?

(A) Four left half plane (LHP) roots
(B) One right half plane (RHP) root, one LHP root and two roots on the imaginary axis
(C) Two RHP roots and two LHP roots
(D) All four roots are on the imaginary axis

Question Number : 49 **Correct : 2 Wrong : -0.66**

The Nyquist plot of the transfer function

$$G(s) = \frac{K}{(s^2 + 2s + 2)(s + 2)}$$

does not encircle the point $(-1 + j0)$ for $K = 10$ but does encircle the point $(-1 + j0)$ for $K = 100$. Then the closed loop system (having unity gain feedback) is

(A) stable for $K = 10$ and stable for $K = 100$
(B) stable for $K = 10$ and unstable for $K = 100$
(C) unstable for $K = 10$ and stable for $K = 100$
(D) unstable for $K = 10$ and unstable for $K = 100$

Question Number : 50 Correct : 2 Wrong : -0.66

In binary frequency shift keying (FSK), the given signal waveforms are

$$u_0(t) = 5\cos(20000\pi t)\,;\, 0 \le t \le T, \text{and}$$
$$u_1(t) = 5\cos(22000\pi t)\,;\, 0 \le t \le T,$$

where T is the bit-duration interval and t is in seconds. Both $u_0(t)$ and $u_1(t)$ are zero outside the interval $0 \le t \le T$. With a matched filter (correlator) based receiver, the smallest positive value of T (in milliseconds) required to have $u_0(t)$ and $u_1(t)$ uncorrelated is

(A) 0.25 ms (B) 0.5 ms (C) 0.75 ms (D) 1.0 ms

Question Number : 51 Correct : 2 Wrong : -0.66

Let $X(t)$ be a wide sense stationary random process with the power spectral density $S_X(f)$ as shown in Figure (a), where f is in Hertz (Hz). The random process $X(t)$ is input to an ideal lowpass filter with the frequency response

$$H(f) = \begin{cases} 1, & |f| \le \frac{1}{2}\text{Hz} \\ 0, & |f| > \frac{1}{2}\text{Hz} \end{cases}$$

as shown in Figure (b). The output of the lowpass filter is $Y(t)$.

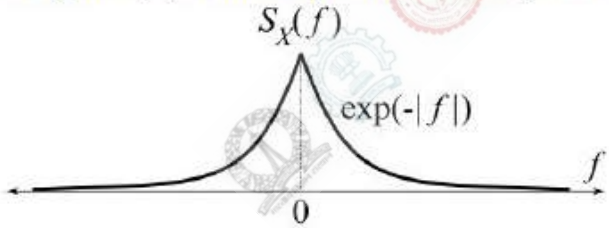

(a)

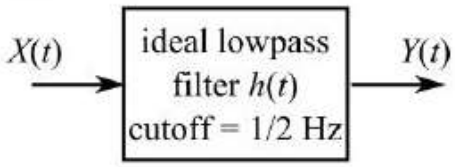

(b)

Let E be the expectation operator and consider the following statements:

I. $E(X(t)) = E(Y(t))$
II. $E(X^2(t)) = E(Y^2(t))$
III. $E(Y^2(t)) = 2$

Select the correct option:

(A) only I is true
(B) only II and III are true
(C) only I and II are true
(D) only I and III are true

Question Number : 52 **Correct : 2 Wrong : 0**

A continuous time signal $x(t) = 4\cos(200\pi t) + 8\cos(400\pi t)$, where t is in seconds, is the input to a linear time invariant (LTI) filter with the impulse response

$$h(t) = \begin{cases} \dfrac{2\sin(300\pi t)}{\pi t}, & t \neq 0 \\ 600, & t = 0. \end{cases}$$

Let $y(t)$ be the output of this filter. The maximum value of $|y(t)|$ is _____.

Question Number : 53 **Correct : 2 Wrong : 0**

An optical fiber is kept along the $\hat{z}$ direction. The refractive indices for the electric fields along $\hat{x}$ and $\hat{y}$ directions in the fiber are $n_x = 1.5000$ and $n_y = 1.5001$, respectively ($n_x \neq n_y$ due to the imperfection in the fiber cross-section). The free space wavelength of a light wave propagating in the fiber is 1.5 μm. If the lightwave is circularly polarized at the input of the fiber, the minimum propagation distance after which it becomes linearly polarized, in centimetres, is _____.

Question Number : 54 **Correct : 2 Wrong : -0.66**

The expression for an electric field in free space is $\mathbf{E} = E_0\,(\hat{x} + \hat{y} + j2\hat{z})\,e^{-j(\omega t - kx + ky)}$, where x, y, z represent the spatial coordinates, t represents time, and ω, k are constants. This electric field

(A) does not represent a plane wave.
(B) represents a circularly polarized plane wave propagating normal to the z-axis.
(C) represents an elliptically polarized plane wave propagating along the x-y plane.
(D) represents a linearly polarized plane wave.

Question Number : 55 **Correct : 2 Wrong : -0.66**

A half wavelength dipole is kept in the x-y plane and oriented along 45° from the x-axis. Determine the direction of null in the radiation pattern for $0 \leq \phi \leq \pi$. Here the angle θ ($0 \leq \theta \leq \pi$) is measured from the z-axis, and the angle ϕ ($0 \leq \phi \leq 2\pi$) is measured from the x-axis in the x-y plane.

(A) $\theta = 90°$, $\phi = 45°$
(B) $\theta = 45°$, $\phi = 90°$
(C) $\theta = 90°$, $\phi = 135°$
(D) $\theta = 45°$, $\phi = 135°$

Question Number : 56 **Correct : 1 Wrong : -0.33**

She has a sharp tongue and it can occasionally turn_____

(A) hurtful (B) left (C) methodical (D) vital

Question Number : 57 **Correct : 1 Wrong : -0.33**

I _____ made arrangements had I _____ informed earlier.

(A) could have, been
(B) would have, being
(C) had, have
(D) had been, been

Question Number : 58 **Correct : 1 Wrong : -0.33**

In the summer, water consumption is known to decrease overall by 25%. A Water Board official states that in the summer household consumption decreases by 20%, while other consumption increases by 70%.

Which of the following statements is correct?

(A) The ratio of household to other consumption is 8/17
(B) The ratio of household to other consumption is 1/17
(C) The ratio of household to other consumption is 17/8
(D) There are errors in the official's statement.

Question Number : 59 **Correct : 1 Wrong : -0.33**

40% of deaths on city roads may be attributed to drunken driving. The number of degrees needed to represent this as a slice of a pie chart is

(A) 120 (B) 144 (C) 160 (D) 212

Question Number : 60 **Correct : 1 Wrong : -0.33**

Some tables are shelves. Some shelves are chairs. All chairs are benches. Which of the following conclusions can be deduced from the preceding sentences?

i. At least one bench is a table
ii. At least one shelf is a bench
iii. At least one chair is a table
iv. All benches are chairs

(A) Only i (B) Only ii (C) Only ii and iii (D) Only iv

Question Number : 61 **Correct : 2 Wrong : -0.66**

"If you are looking for a history of India, or for an account of the rise and fall of the British Raj, or for the reason of the cleaving of the subcontinent into two mutually antagonistic parts and the effects this mutilation will have in the respective sections, and ultimately on Asia, you will not find it in these pages; for though I have spent a lifetime in the country, I lived too near the seat of events, and was too intimately associated with the actors, to get the perspective needed for the impartial recording of these matters".

Here, the word 'antagonistic' is closest in meaning to

(A) impartial (B) argumentative (C) separated (D) hostile

Question Number : 62 **Correct : 2 Wrong : -0.66**

S, T, U, V, W, X, Y, and Z are seated around a circular table. T's neighbours are Y and V. Z is seated third to the left of T and second to the right of S. U's neighbours are S and Y; and T and W are not seated opposite each other. Who is third to the left of V?

(A) X (B) W (C) U (D) T

Question Number : 63 **Correct : 2 Wrong : -0.66**

Trucks (10 m long) and cars (5 m long) go on a single lane bridge. There must be a gap of at least 20 m after each truck and a gap of at least 15 m after each car. Trucks and cars travel at a speed of 36 km/h. If cars and trucks go alternately, what is the maximum number of vehicles that can use the bridge in one hour?

(A) 1440 (B) 1200 (C) 720 (D) 600

Question Number : 64 **Correct : 2 Wrong : -0.66**

There are 3 Indians and 3 Chinese in a group of 6 people. How many subgroups of this group can we choose so that every subgroup has at least one Indian?

(A) 56 (B) 52 (C) 48 (D) 44

Question Number : 65 **Correct : 2 Wrong : -0.66**

A contour line joins locations having the same height above the mean sea level. The following is a contour plot of a geographical region. Contour lines are shown at 25 m intervals in this plot.

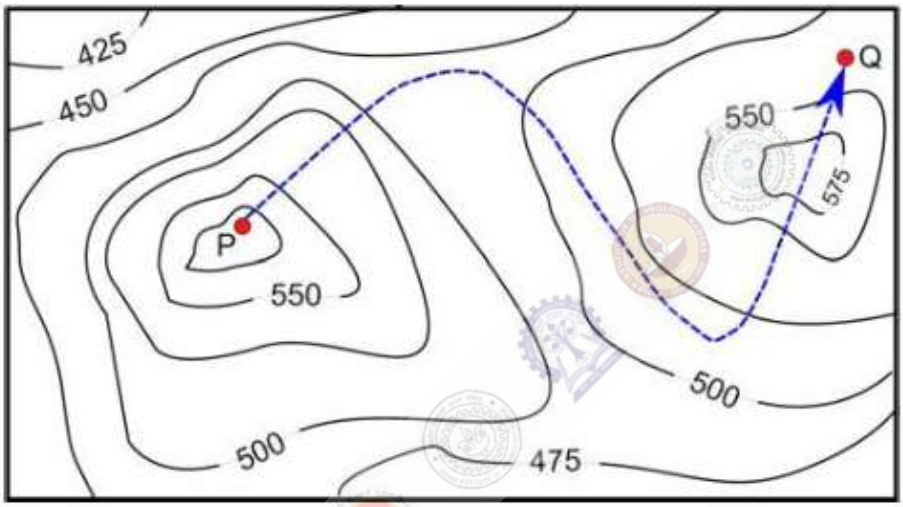

The path from P to Q is best described by

(A) Up-Down-Up-Down
(B) Down-Up-Down-Up
(C) Down-Up-Down
(D) Up-Down-Up

Q. No.	Type	Section	Key	Marks
1	MCQ	EC-1	C	1
2	MCQ	EC-1	C	1
3	MCQ	EC-1	B	1
4	NAT	EC-1	0.027 to 0.028	1
5	MCQ	EC-1	D	1
6	MCQ	EC-1	A	1
7	NAT	EC-1	0.9 to 1.1	1
8	MCQ	EC-1	A	1
9	MCQ	EC-1	A	1
10	MCQ	EC-1	D	1
11	MCQ	EC-1	C	1
12	MCQ	EC-1	B	1
13	MCQ	EC-1	C	1
14	MCQ	EC-1	D	1
15	MCQ	EC-1	B	1
16	MCQ	EC-1	C	1
17	NAT	EC-1	29.9 to 30.1	1
18	NAT	EC-1	0.99 to 1.01	1
19	MCQ	EC-1	A	1
20	MCQ	EC-1	A	1
21	NAT	EC-1	0.0 to 0.0	1
22	MCQ	EC-1	D	1
23	MCQ	EC-1	B	1
24	NAT	EC-1	0.85 to 0.88	1
25	MCQ	EC-1	C	1
26	MCQ	EC-1	C	2
27	NAT	EC-1	0.70 to 0.85	2
28	NAT	EC-1	-11.1 to -10.9	2
29	MCQ	EC-1	D	2
30	NAT	EC-1	0.65 to 0.72	2
31	MCQ	EC-1	B	2
32	NAT	EC-1	31.00 to 31.00	2
33	NAT	EC-1	2.05 to 2.15	2
34	NAT	EC-1	2.55 to 2.65	2
35	NAT	EC-1	0.30 to 0.40	2
36	NAT	EC-1	1.5 to 1.7	2

37	NAT	EC-1	15.9 to 16.1	2
38	NAT	EC-1	10.0 to 10.0	2
39	NAT	EC-1	0.89 to 0.91	2
40	NAT	EC-1	1.9 to 2.1	2
41	NAT	EC-1	127.0 to 129.0	2
42	NAT	EC-1	43.3 to 45.3	2
43	MCQ	EC-1	B	2
44	NAT	EC-1	10.0 to 10.0	2
45	MCQ	EC-1	B	2
46	MCQ	EC-1	D	2
47	MCQ	EC-1	A	2
48	MCQ	EC-1	C	2
49	MCQ	EC-1	B	2
50	MCQ	EC-1	B	2
51	MCQ	EC-1	A	2
52	NAT	EC-1	7.90 to 8.10	2
53	NAT	EC-1	0.36 to 0.38	2
54	MCQ	EC-1	C	2
55	MCQ	EC-1	A	2
56	MCQ	GA	A	1
57	MCQ	GA	A	1
58	MCQ	GA	D	1
59	MCQ	GA	B	1
60	MCQ	GA	B	1
61	MCQ	GA	D	2
62	MCQ	GA	A	2
63	MCQ	GA	A	2
64	MCQ	GA	A	2
65	MCQ	GA	C	2

SESSION - 2

Graduate Aptitude Test in Engineering 2017

Question Paper Name: Electronics and Communication Engineering 5th Feb 2017 session 2
Subject Name: Electronics and Communication Engineering
Duration: 180
Total Marks: 100

Organizing Institute:

Indian Institute of Technology Roorkee

Question Number : 1 **Correct : 1 Wrong : 0**

The rank of the matrix

$$\begin{bmatrix} 1 & -1 & 0 & 0 & 0 \\ 0 & 0 & 1 & -1 & 0 \\ 0 & 1 & -1 & 0 & 0 \\ -1 & 0 & 0 & 0 & 1 \\ 0 & 0 & 0 & 1 & -1 \end{bmatrix}$$

is _____.

Question Number : 2 **Correct : 1 Wrong : -0.33**

The general solution of the differential equation

$$\frac{d^2y}{dx^2} + 2\frac{dy}{dx} - 5y = 0$$

in terms of arbitrary constants K_1 and K_2 is

(A) $K_1 e^{(-1+\sqrt{6})x} + K_2 e^{(-1-\sqrt{6})x}$

(B) $K_1 e^{(-1+\sqrt{8})x} + K_2 e^{(-1-\sqrt{8})x}$

(C) $K_1 e^{(-2+\sqrt{6})x} + K_2 e^{(-2-\sqrt{6})x}$

(D) $K_1 e^{(-2+\sqrt{8})x} + K_2 e^{(-2-\sqrt{8})x}$

Question Number : 3 **Correct : 1 Wrong : 0**

The smaller angle (in degrees) between the planes $x + y + z = 1$ and $2x - y + 2z = 0$ is _____.

Question Number : 4 **Correct : 1 Wrong : -0.33**

The residues of a function

$$f(z) = \frac{1}{(z-4)(z+1)^3}$$

are

(A) $\frac{-1}{27}$ and $\frac{-1}{125}$

(B) $\frac{1}{125}$ and $\frac{-1}{125}$

(C) $\frac{-1}{27}$ and $\frac{1}{5}$

(D) $\frac{1}{125}$ and $\frac{-1}{5}$

Question Number : 5 **Correct : 1 Wrong : 0**

In the circuit shown, V is a sinusoidal voltage source. The current I is in phase with voltage V. The ratio $\frac{\text{amplitude of voltage across the capacitor}}{\text{amplitude of voltage across the resistor}}$ is _____.

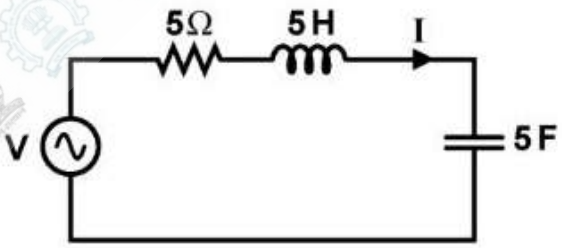

Question Number : 6 **Correct : 1 Wrong : 0**

A connection is made consisting of resistance A in series with a parallel combination of resistances B and C. Three resistors of value 10 Ω, 5 Ω, 2 Ω are provided. Consider all possible permutations of the given resistors into the positions A, B, C, and identify the configurations with maximum possible overall resistance, and also the ones with minimum possible overall resistance. The ratio of maximum to minimum values of the resistances (up to second decimal place) is _____.

Question Number : 7 **Correct : 1 Wrong : -0.33**

An LTI system with unit sample response $h[n] = 5\delta[n] - 7\delta[n-1] + 7\delta[n-3] - 5\delta[n-4]$ is a

(A) low-pass filter

(B) high-pass filter

(C) band-pass filter

(D) band-stop filter

Question Number : 8 **Correct : 1 Wrong : -0.33**

The input $x(t)$ and the output $y(t)$ of a continuous-time system are related as

$$y(t) = \int_{t-T}^{t} x(u)\, du.$$

The system is

(A) linear and time-variant

(B) linear and time-invariant

(C) non-linear and time-variant

(D) non-linear and time-invariant

Question Number : 9 **Correct : 1 Wrong : -0.33**

An n-channel enhancement mode MOSFET is biased at $V_{GS} > V_{TH}$ and $V_{DS} > (V_{GS} - V_{TH})$, where V_{GS} is the gate-to-source voltage, V_{DS} is the drain-to-source voltage and V_{TH} is the threshold voltage. Considering channel length modulation effect to be significant, the MOSFET behaves as a

(A) voltage source with zero output impedance

(B) voltage source with non-zero output impedance

(C) current source with finite output impedance

(D) current source with infinite output impedance

Question Number : 10 **Correct : 1 Wrong : -0.33**

An *npn* bipolar junction transistor (BJT) is operating in the active region. If the reverse bias across the base-collector junction is increased, then

(A) the effective base width increases and common-emitter current gain increases

(B) the effective base width increases and common-emitter current gain decreases

(C) the effective base width decreases and common-emitter current gain increases

(D) the effective base width decreases and common-emitter current gain decreases

Question Number : 11 **Correct : 1 Wrong : 0**

Consider an n-channel MOSFET having width W, length L, electron mobility in the channel μ_n and oxide capacitance per unit area C_{ox}. If gate-to-source voltage $V_{GS} = 0.7$ V, drain-to-source voltage $V_{DS} = 0.1$ V, $(\mu_n C_{ox}) = 100\ \mu A/V^2$, threshold voltage $V_{TH} = 0.3$ V and $(W/L) = 50$, then the transconductance g_m (in mA/V) is _____

Question Number : 12 **Correct : 1 Wrong : 0**

The output V_0 of the diode circuit shown in the figure is connected to an averaging DC voltmeter. The reading on the DC voltmeter in Volts, neglecting the voltage drop across the diode, is _____.

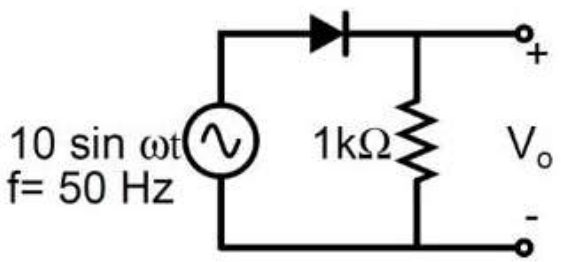

Question Number : 13 **Correct : 1 Wrong : -0.33**

In the figure, D1 is a real silicon *pn* junction diode with a drop of 0.7 V under forward bias condition and D2 is a Zener diode with breakdown voltage of − 6.8 V. The input $V_{in}(t)$ is a periodic square wave of period T, whose one period is shown in the figure.

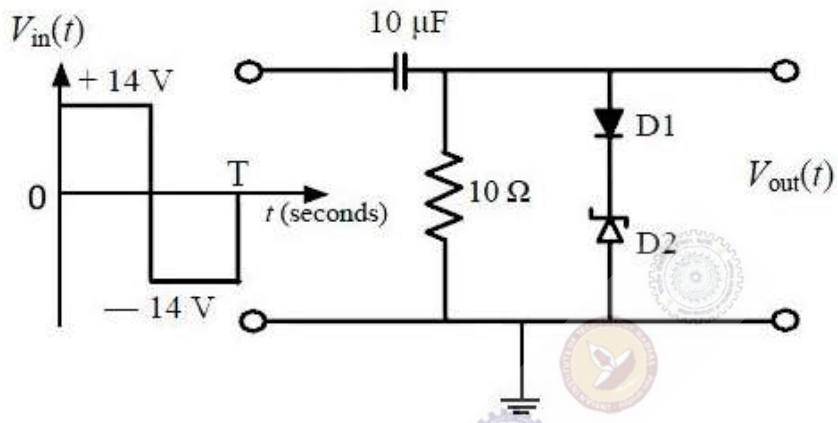

Assuming 10τ << T, where τ is the time constant of the circuit, the maximum and minimum values of the output waveform are respectively,

(A) 7.5 V and −20.5 V

(B) 6.1 V and −21.9 V

(C) 7.5 V and −21.2 V

(D) 6.1 V and −22.6 V

Question Number : 14 **Correct : 1 Wrong : 0**

Consider the circuit shown in the figure. Assume base-to-emitter voltage $V_{BE} = 0.8$ V and common-base current gain (α) of the transistor is unity.

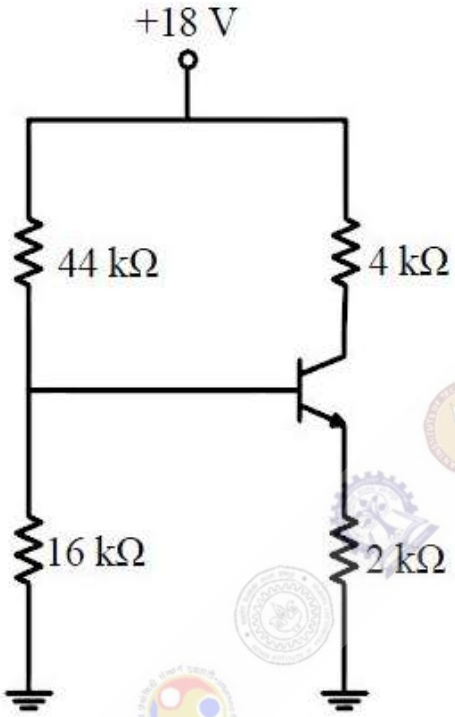

The value of the collector-to-emitter voltage V_{CE} (in volt) is _____

Question Number : 15 **Correct : 1 Wrong : -0.33**

For the circuit shown in the figure, P and Q are the inputs and Y is the output.

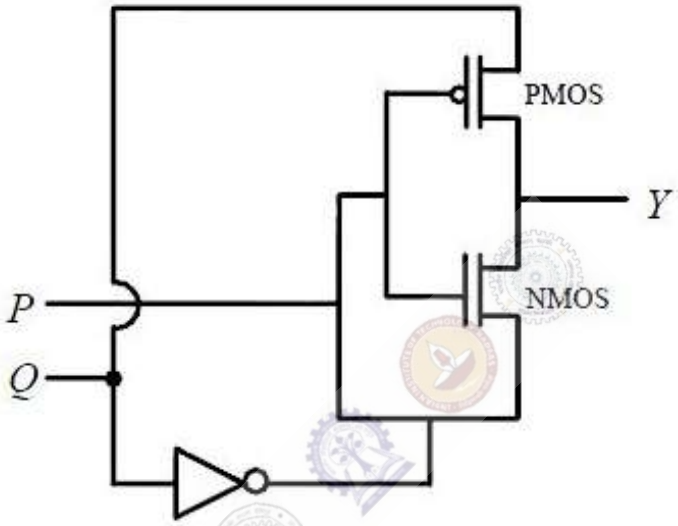

The logic implemented by the circuit is

(A) XNOR (B) XOR (C) NOR (D) OR

Question Number : 16 **Correct : 1 Wrong : -0.33**

Consider the circuit shown in the figure.

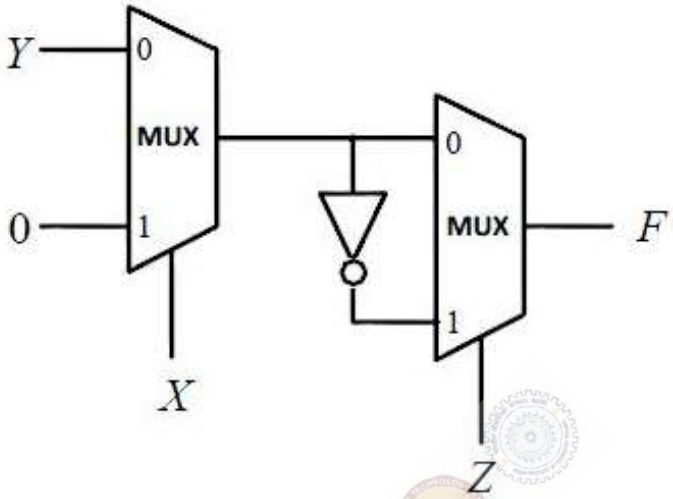

The Boolean expression F implemented by the circuit is

(A) $\bar{X}\,\bar{Y}\,\bar{Z} + X\,Y + \bar{Y}\,Z$

(B) $\bar{X}\,Y\,\bar{Z} + X\,Z + \bar{Y}\,Z$

(C) $\bar{X}\,Y\,\bar{Z} + X\,Y + \bar{Y}\,Z$

(D) $\bar{X}\,\bar{Y}\,\bar{Z} + X\,Z + \bar{Y}\,Z$

Question Number : 17 **Correct : 1 Wrong : -0.33**

In a DRAM,

(A) periodic refreshing is not required

(B) information is stored in a capacitor

(C) information is stored in a latch

(D) both read and write operations can be performed simultaneously

Question Number : 18 **Correct : 1 Wrong : 0**

For the system shown in the figure, $Y(s)/X(s) =$ _____

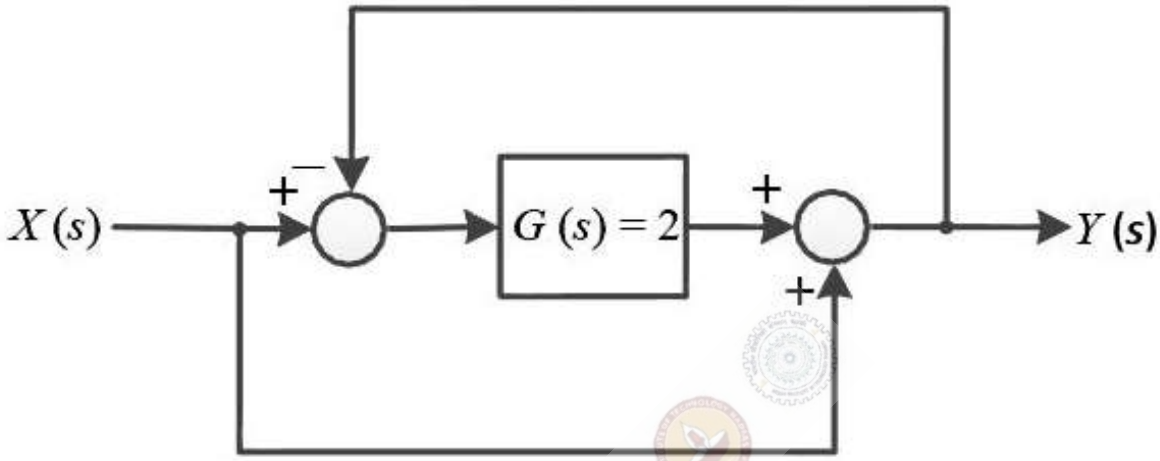

Question Number : 19 **Correct : 1 Wrong : 0**

Consider the state space realization

$$\begin{bmatrix}\dot{x}_1(t)\\ \dot{x}_2(t)\end{bmatrix} = \begin{bmatrix}0 & 0\\ 0 & -9\end{bmatrix}\begin{bmatrix}x_1(t)\\ x_2(t)\end{bmatrix} + \begin{bmatrix}0\\ 45\end{bmatrix}u(t)\,,\ \text{with the initial condition}\ \begin{bmatrix}x_1(0)\\ x_2(0)\end{bmatrix} = \begin{bmatrix}0\\ 0\end{bmatrix},$$

where $u(t)$ denotes the unit step function. The value of $\lim_{t\to\infty}\left|\sqrt{x_1^2(t)+x_2^2(t)}\right|$ is _____.

Question Number : 20 **Correct : 1 Wrong : -0.33**

Which of the following statements is **incorrect**?

(A) Lead compensator is used to reduce the settling time.

(B) Lag compensator is used to reduce the steady state error.

(C) Lead compensator may increase the order of a system.

(D) Lag compensator always stabilizes an unstable system.

Question Number : 21 **Correct : 1 Wrong : -0.33**

Which one of the following graphs shows the Shannon capacity (channel capacity) in bits of a memoryless binary symmetric channel with crossover probability p?

(A)

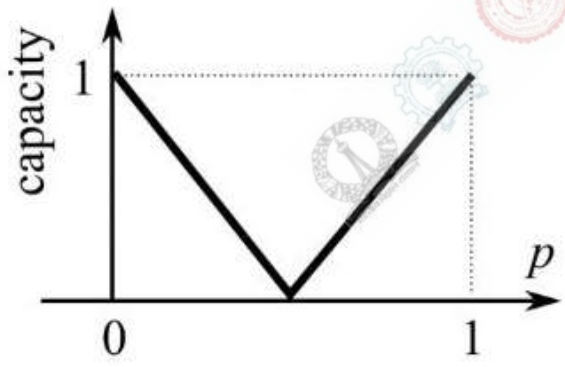

(B)

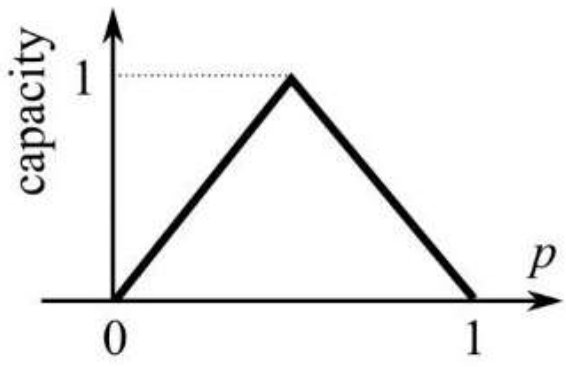

(C)

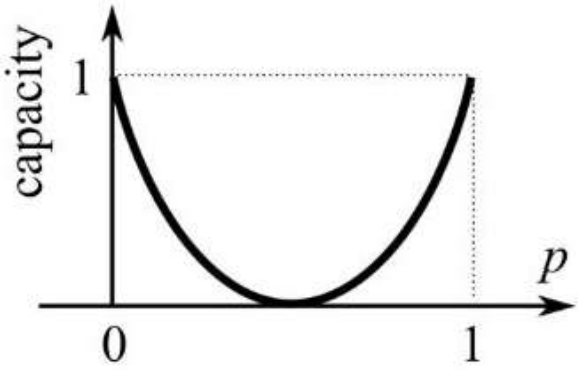

(D)

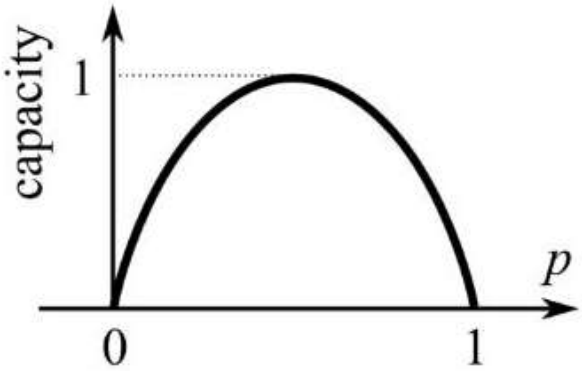

Question Number : 22 Correct : 1 Wrong : 0

Consider the random process

$$X(t) = U + Vt,$$

where U is a zero-mean Gaussian random variable and V is a random variable uniformly distributed between 0 and 2. Assume that U and V are statistically independent. The mean value of the random process at $t = 2$ is _____

Question Number : 23 Correct : 1 Wrong : 0

A sinusoidal message signal is converted to a PCM signal using a uniform quantizer. The required signal-to-quantization noise ratio (SQNR) at the output of the quantizer is 40 dB. The minimum number of bits per sample needed to achieve the desired SQNR is _____

Question Number : 24 Correct : 1 Wrong : -0.33

Two conducting spheres S1 and S2 of radii a and b ($b > a$) respectively, are placed far apart and connected by a long, thin conducting wire, as shown in the figure.

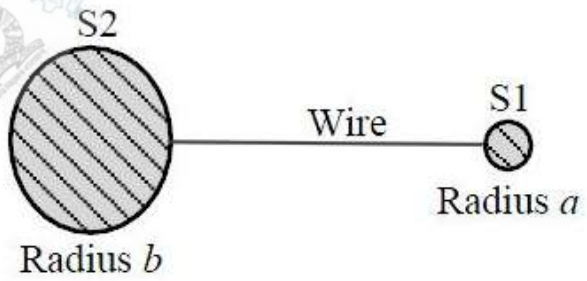

For some charge placed on this structure, the potential and surface electric field on S1 are V_a and E_a, and that on S2 are V_b and E_b, respectively. Then, which of the following is **CORRECT**?

(A) $V_a = V_b$ and $E_a < E_b$

(B) $V_a > V_b$ and $E_a > E_b$

(C) $V_a = V_b$ and $E_a > E_b$

(D) $V_a > V_b$ and $E_a = E_b$

Question Number : 25 **Correct : 1 Wrong : 0**

A two-wire transmission line terminates in a television set. The VSWR measured on the line is 5.8. The percentage of power that is reflected from the television set is _____

Question Number : 26 **Correct : 2 Wrong : -0.66**

The values of the integrals

$$\int_0^1 \left(\int_0^1 \frac{x-y}{(x+y)^3} dy \right) dx$$

and

$$\int_0^1 \left(\int_0^1 \frac{x-y}{(x+y)^3} dx \right) dy$$

are

(A) same and equal to 0.5

(B) same and equal to − 0.5

(C) 0.5 and − 0.5, respectively

(D) − 0.5 and 0.5, respectively

Question Number : 27 **Correct : 2 Wrong : -0.66**

An integral I over a counterclockwise circle C is given by

$$I = \oint_C \frac{z^2-1}{z^2+1} e^z \, dz.$$

If C is defined as $|z| = 3$, then the value of I is

(A) $-\pi i \sin(1)$ (B) $-2\pi i \sin(1)$ (C) $-3\pi i \sin(1)$ (D) $-4\pi i \sin(1)$

Question Number : 28 **Correct : 2 Wrong : -0.66**

If the vector function $\vec{F} = \widehat{a_x}(3y - k_1 z) + \widehat{a_y}(k_2 x - 2z) - \widehat{a_z}(k_3 y + z)$ is irrotational, then the values of the constants k_1, k_2 and k_3, respectively, are

(A) 0.3, −2.5, 0.5

(B) 0.0, 3.0, 2.0

(C) 0.3, 0.33, 0.5

(D) 4.0, 3.0, 2.0

Question Number : 29 **Correct : 2 Wrong : 0**

Passengers try repeatedly to get a seat reservation in any train running between two stations until they are successful. If there is 40% chance of getting reservation in any attempt by a passenger, then the average number of attempts that passengers need to make to get a seat reserved is _____

Question Number : 30 **Correct : 2 Wrong : 0**

The minimum value of the function $f(x) = \frac{1}{3}x(x^2 - 3)$ in the interval $-100 \le x \le 100$ occurs at $x =$ _____.

Question Number : 31 **Correct : 2 Wrong : 0**

The switch in the circuit, shown in the figure, was open for a long time and is closed at $t = 0$.

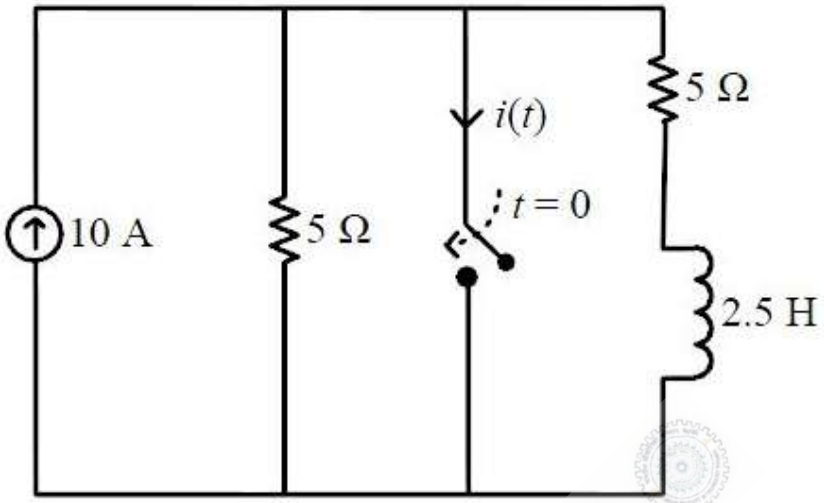

The current $i(t)$ (in ampere) at $t = 0.5$ seconds is _____

Question Number : 32 **Correct : 2 Wrong : 0**

Consider the circuit shown in the figure.

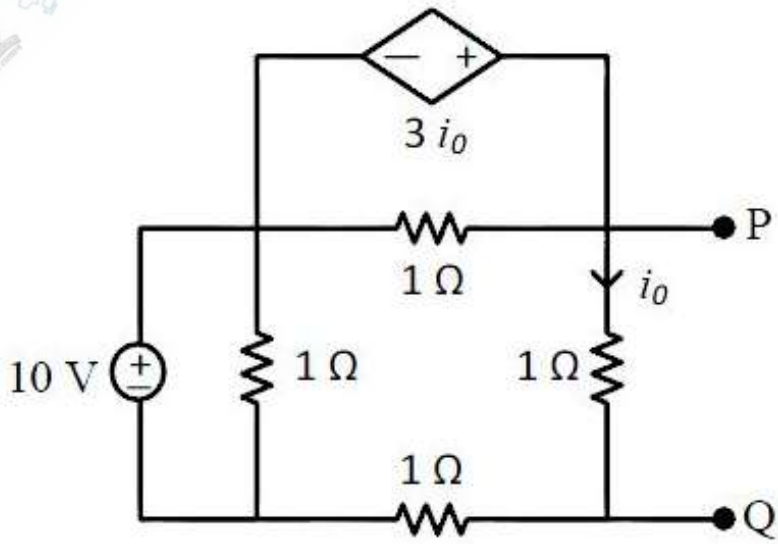

The Thevenin equivalent resistance (in Ω) across P-Q is _____

Question Number : 33 **Correct : 2 Wrong : 0**

Consider an LTI system with magnitude response

$$|H(f)| = \begin{cases} 1 - \dfrac{|f|}{20}, & |f| \le 20 \\ 0, & |f| > 20 \end{cases}$$

and phase response

$$\arg\{H(f)\} = -2f.$$

If the input to the system is

$$x(t) = 8\cos\left(20\pi t + \frac{\pi}{4}\right) + 16\sin\left(40\pi t + \frac{\pi}{8}\right) + 24\cos\left(80\pi t + \frac{\pi}{16}\right),$$

then the average power of the output signal $y(t)$ is _____

Question Number : 34 **Correct : 2 Wrong : 0**

The transfer function of a causal LTI system is $H(s) = 1/s$. If the input to the system is $x(t) = [\sin(t)/\pi t]\, u(t)$, where $u(t)$ is a unit step function, the system output $y(t)$ as $t \to \infty$ is _____

Question Number : 35 **Correct : 2 Wrong : 0**

Consider the parallel combination of two LTI systems shown in the figure.

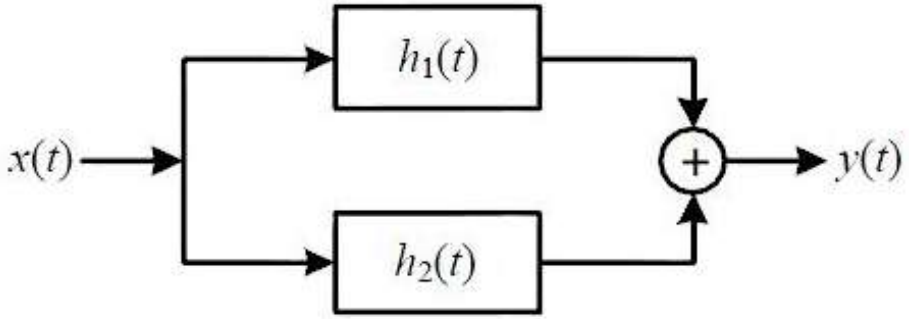

The impulse responses of the systems are

$$h_1(t) = 2\delta(t+2) - 3\delta(t+1)$$

$$h_2(t) = \delta(t-2).$$

If the input $x(t)$ is a unit step signal, then the energy of $y(t)$ is _____

Question Number : 36 **Correct : 2 Wrong : 0**

A MOS capacitor is fabricated on p-type Si (Silicon) where the metal work function is 4.1 eV and electron affinity of Si is 4.0 eV. $E_C - E_F = 0.9$ eV, where E_C and E_F are the conduction band minimum and the Fermi energy levels of Si, respectively. Oxide $\epsilon_r = 3.9$, $\epsilon_o = 8.85 \times 10^{-14}$ F/cm, oxide thickness $t_{ox} = 0.1$ µm and electronic charge $q = 1.6 \times 10^{-19}$ C. If the measured flat band voltage of this capacitor is -1 V, then the magnitude of the fixed charge at the oxide-semiconductor interface, in nC/cm^2, is _____.

Question Number : 37 **Correct : 2 Wrong : 0**

For a particular intensity of incident light on a silicon pn junction solar cell, the photocurrent density (J_L) is 2.5 mA/cm^2 and the open-circuit voltage (V_{oc}) is 0.451 V. Consider thermal voltage (V_T) to be 25 mV. If the intensity of the incident light is increased by 20 times, assuming that the temperature remains unchanged, V_{oc} (in volts) will be _____

Question Number : 38 **Correct : 2 Wrong : -0.66**

Two n-channel MOSFETs, T1 and T2, are identical in all respects except that the width of T2 is double that of T1. Both the transistors are biased in the saturation region of operation, but the gate overdrive voltage ($V_{GS} - V_{TH}$) of T2 is double that of T1, where V_{GS} and V_{TH} are the gate-to-source voltage and threshold voltage of the transistors, respectively. If the drain current and transconductance of T1 are I_{D1} and g_{m1} respectively, the corresponding values of these two parameters for T2 are

(A) $8I_{D1}$ and $2g_{m1}$ (B) $8I_{D1}$ and $4g_{m1}$ (C) $4I_{D1}$ and $4g_{m1}$ (D) $4I_{D1}$ and $2g_{m1}$

Question Number : 39 **Correct : 2 Wrong : -0.66**

An abrupt pn junction (located at $x = 0$) is uniformly doped on both p and n sides. The width of the depletion region is W and the electric field variation in the x-direction is $E(x)$. Which of the following figures represents the electric field profile near the pn junction?

(A)

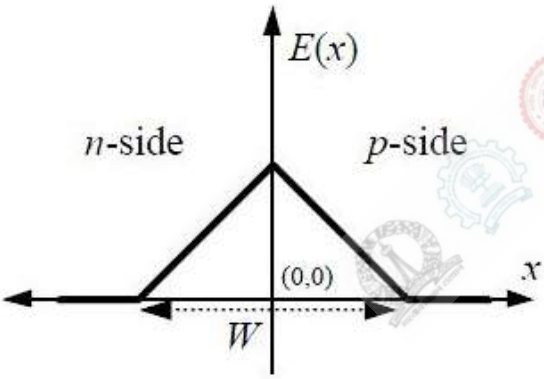

(B)

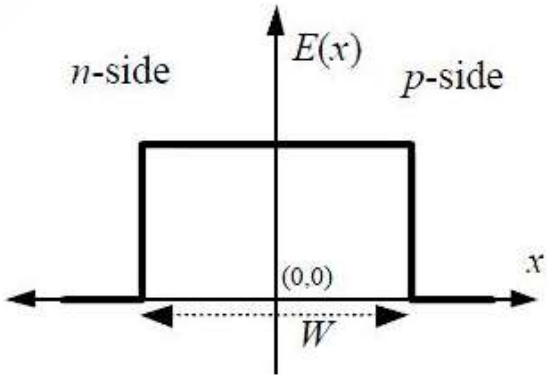

(C)

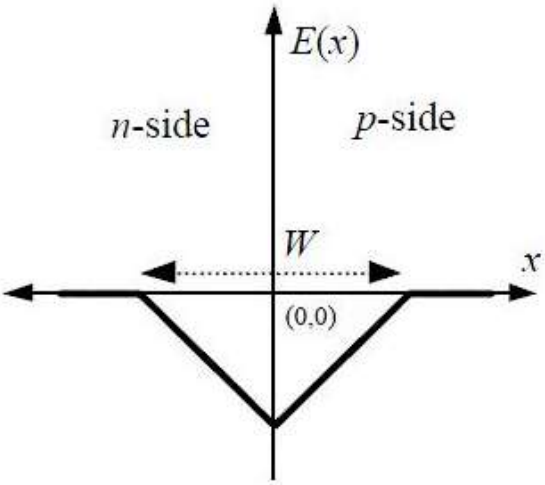

(D)

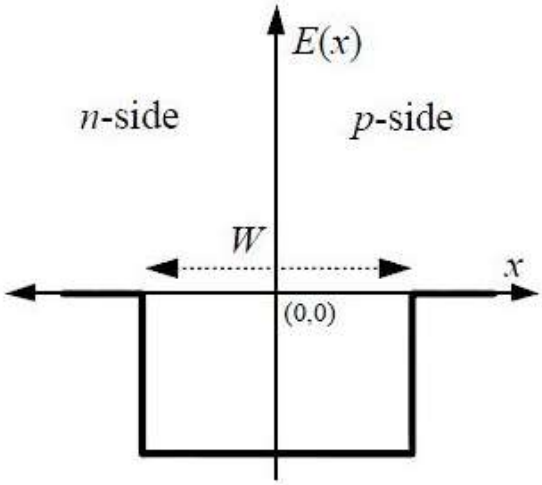

Question Number : 40 **Correct : 2 Wrong : -0.66**

Assuming that transistors M_1 and M_2 are identical and have a threshold voltage of 1 V, the state of transistors M_1 and M_2 are respectively

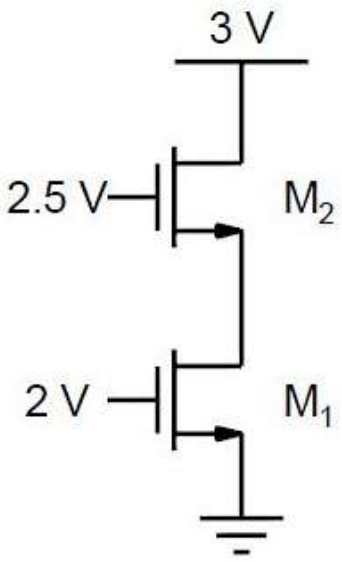

(A) Saturation, Saturation

(B) Linear, Linear

(C) Linear, Saturation

(D) Saturation, Linear

Question Number : 41 **Correct : 2 Wrong : 0**

In the circuit shown, transistors Q_1 and Q_2 are biased at a collector current of 2.6 mA. Assuming that transistor current gains are sufficiently large to assume collector current equal to emitter current and thermal voltage of 26 mV, the magnitude of voltage gain V_o/V_s in the mid-band frequency range is _____ (up to second decimal place).

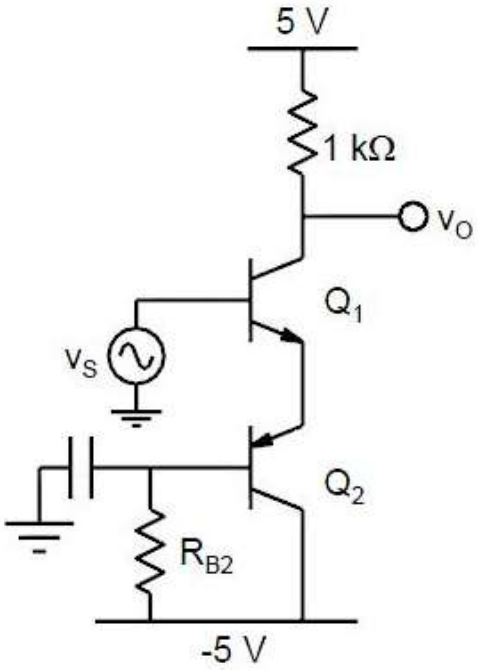

Question Number : 42 **Correct : 2 Wrong : 0**

In the voltage reference circuit shown in the figure, the op-amp is ideal and the transistors Q_1, $Q_2, \ldots, Q_{32}$ are identical in all respects and have infinitely large values of common-emitter current gain (β). The collector current (I_c) of the transistors is related to their base-emitter voltage (V_{BE}) by the relation $I_C = I_S \exp(V_{BE}/V_T)$, where I_S is the saturation current. Assume that the voltage V_p shown in the figure is 0.7 V and the thermal voltage $V_T = 26$ mV.

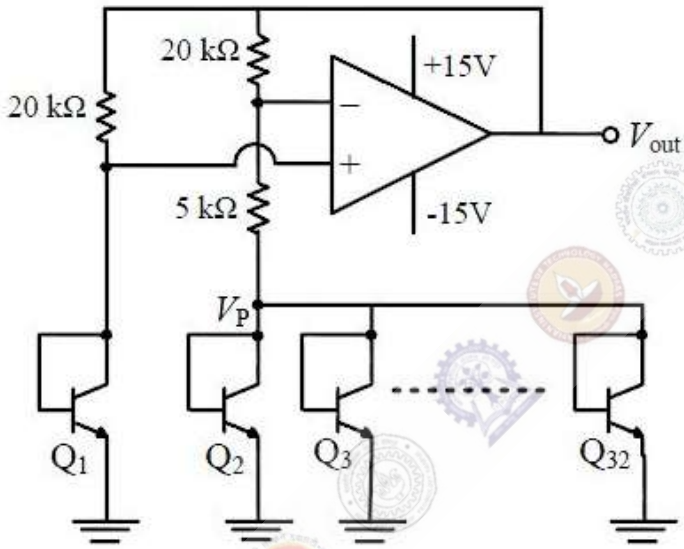

The output voltage V_{out} (in volts) is _____

Question Number : 43 **Correct : 2 Wrong : 0**

The state diagram of a finite state machine (FSM) designed to detect an overlapping sequence of three bits is shown in the figure. The FSM has an input 'In' and an output 'Out'. The initial state of the FSM is S_0.

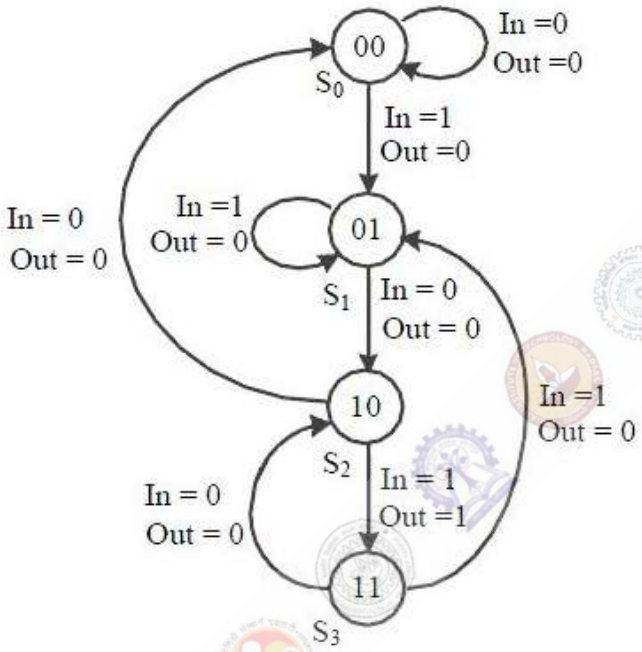

If the input sequence is 10101101001101, starting with the left-most bit, then the number of times 'Out' will be 1 is _____

Question Number : 44 **Correct : 2 Wrong : 0**

Figure I shows a 4-bit ripple carry adder realized using full adders and Figure II shows the circuit of a full-adder (FA). The propagation delay of the XOR, AND and OR gates in Figure II are 20 ns, 15 ns and 10 ns, respectively. Assume all the inputs to the 4-bit adder are initially reset to 0.

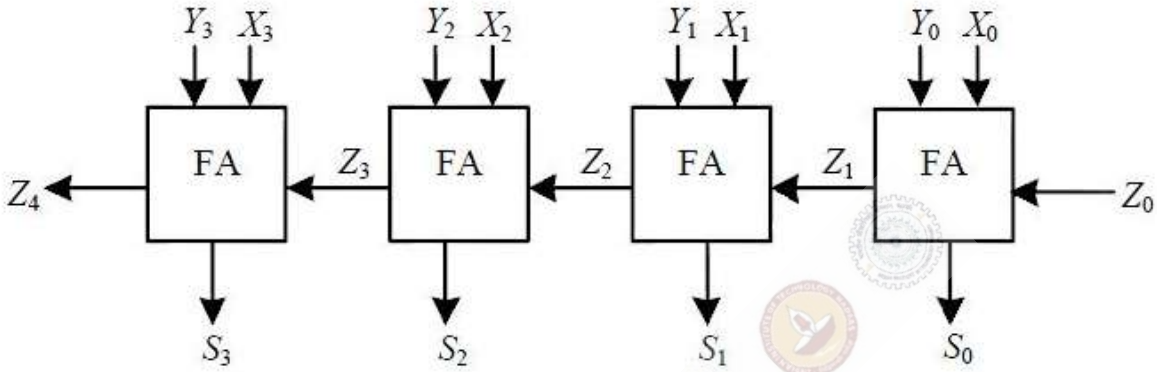

Figure I

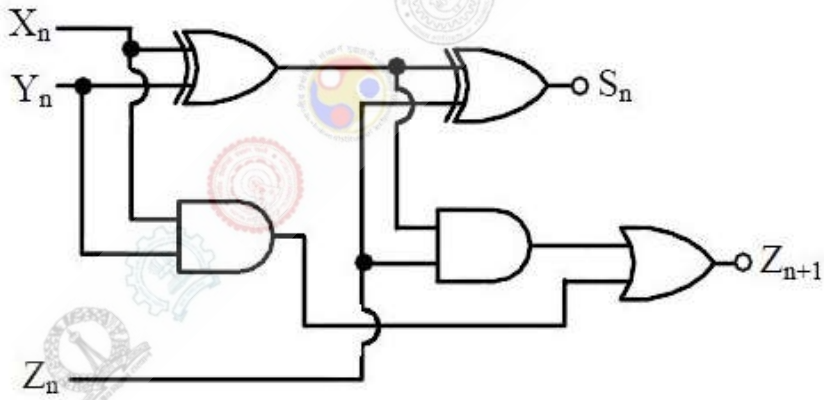

Figure II

At $t = 0$, the inputs to the 4-bit adder are changed to $X_3X_2X_1X_0 = 1100$, $Y_3Y_2Y_1Y_0 = 0100$ and $Z_0 = 1$. The output of the ripple carry adder will be stable at t (in ns) = _____

Question Number : 45 **Correct : 2 Wrong : -0.66**

A programmable logic array (PLA) is shown in the figure.

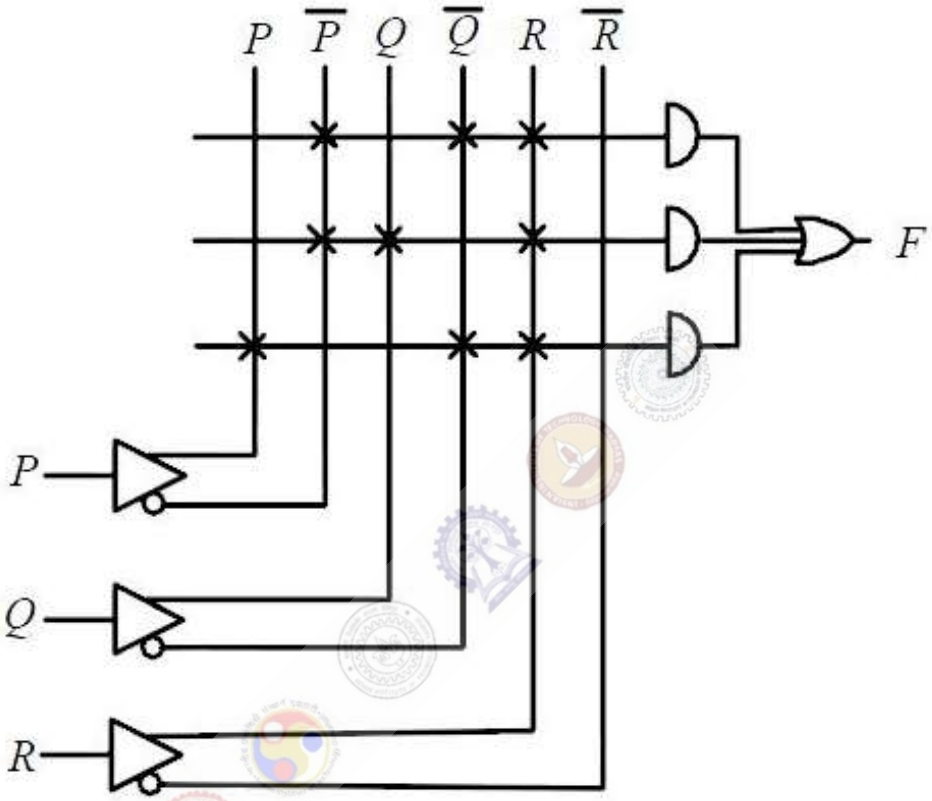

The Boolean function F implemented is

(A) $\bar{P}\,\bar{Q}\,R + \bar{P}\,Q\,R + P\,\bar{Q}\,\bar{R}$

(B) $(\bar{P} + \bar{Q} + R)\,(\bar{P} + Q + R)\,(P + \bar{Q} + \bar{R})$

(C) $\bar{P}\,\bar{Q}\,R + \bar{P}\,Q\,R + P\,\bar{Q}\,R$

(D) $(\bar{P} + \bar{Q} + R)\,(\bar{P} + Q + R)\,(P + \bar{Q} + R)$

Question Number : 46 **Correct : 2 Wrong : 0**

A unity feedback control system is characterized by the open-loop transfer function

$$G(s) = \frac{2(s+1)}{s^3 + ks^2 + 2s + 1}$$

The value of k for which the system oscillates at 2 rad/s is _____

Question Number : 47 **Correct : 2 Wrong : -0.66**

A second-order LTI system is described by the following state equations,

$$\frac{d}{dt}x_1(t) - x_2(t) = 0$$

$$\frac{d}{dt}x_2(t) + 2x_1(t) + 3x_2(t) = r(t)$$

where $x_1(t)$ and $x_2(t)$ are the two state variables and $r(t)$ denotes the input. The output $c(t) = x_1(t)$. The system is

(A) undamped (oscillatory)

(B) underdamped

(C) critically damped

(D) overdamped

Question Number : 48 **Correct : 2 Wrong : -0.66**

A unity feedback control system is characterized by the open-loop transfer function

$$G(s) = \frac{10K(s+2)}{s^3 + 3s^2 + 10}$$

The Nyquist path and the corresponding Nyquist plot of $G(s)$ are shown in the figures below.

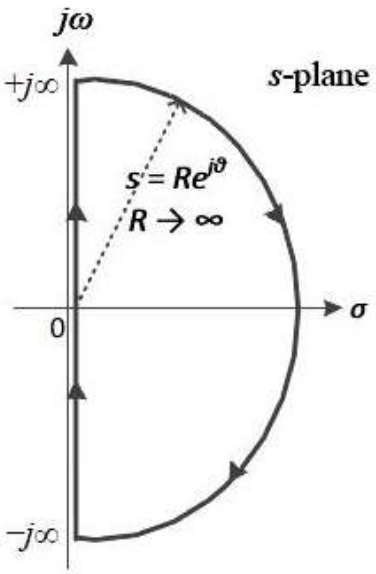

Nyquist Path for $G(s)$

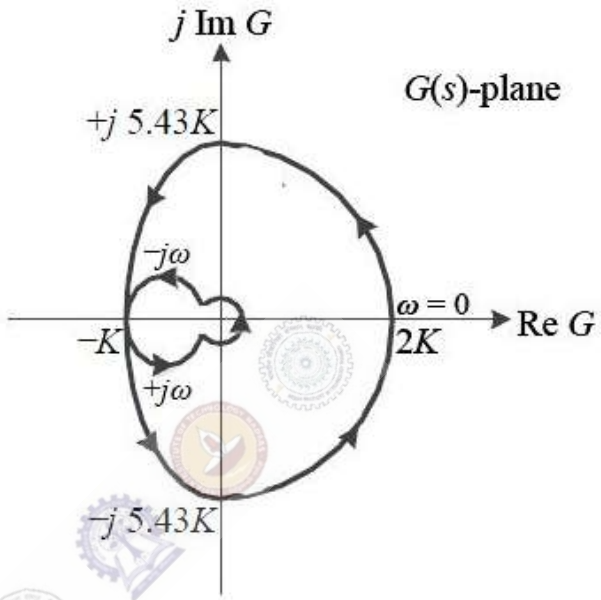

Nyquist Plot of $G(s)$

If $0 < K < 1$, then the number of poles of the closed-loop transfer function that lie in the right-half of the s-plane is

(A) 0 (B) 1 (C) 2 (D) 3

Question Number : 49 **Correct : 2 Wrong : -0.66**

The signal $x(t) = \sin(14000\pi t)$, where t is in seconds, is sampled at a rate of 9000 samples per second. The sampled signal is the input to an ideal lowpass filter with frequency response $H(f)$ as follows:

$$H(f) = \begin{cases} 1, & |f| \le 12 \text{ kHz} \\ 0, & |f| > 12 \text{ kHz}. \end{cases}$$

What is the number of sinusoids in the output and their frequencies in kHz?

(A) Number = 1, frequency = 7

(B) Number = 3, frequencies = 2, 7, 11

(C) Number = 2, frequencies = 2, 7

(D) Number = 2, frequencies = 7, 11

Question Number : 50 Correct : 2 Wrong : 0

The unmodulated carrier power in an AM transmitter is 5 kW. This carrier is modulated by a sinusoidal modulating signal. The maximum percentage of modulation is 50%. If it is reduced to 40%, then the maximum unmodulated carrier power (in kW) that can be used without overloading the transmitter is _____

Question Number : 51 Correct : 2 Wrong : 0

A modulating signal given by $x(t) = 5\ \sin(4\pi 10^3 t - 10\pi \cos 2\pi\, 10^3 t)$ V is fed to a phase modulator with phase deviation constant $k_p = 5$ rad/V. If the carrier frequency is 20 kHz, the instantaneous frequency (in kHz) at $t = 0.5$ ms is _____

Question Number : 52 Correct : 2 Wrong : -0.66

Consider a binary memoryless channel characterized by the transition probability diagram shown in the figure.

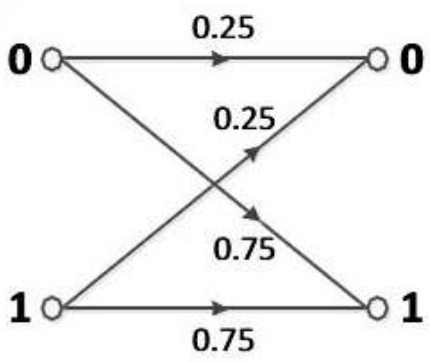

The channel is

(A) lossless

(B) noiseless

(C) useless

(D) deterministic

Question Number : 53 **Correct : 2 Wrong : 0**

An electron (q_1) is moving in free space with velocity 10^5 m/s towards a stationary electron (q_2) far away. The closest distance that this moving electron gets to the stationary electron before the repulsive force diverts its path is _____ $\times 10^{-8}$ m.

[Given, mass of electron $m = 9.11\times10^{-31}$ kg, charge of electron $e = -1.6\times10^{-19}$ C, and permittivity $\varepsilon_0 = (1/36\pi)\times10^{-9}$ F/m]

Question Number : 54 **Correct : 2 Wrong : -0.66**

Standard air-filled rectangular waveguides of dimensions $a = 2.29$ cm and $b = 1.02$ cm are designed for radar applications. It is desired that these waveguides operate only in the dominant TE_{10} mode with the operating frequency at least 25% above the cutoff frequency of the TE_{10} mode but not higher than 95% of the next higher cutoff frequency. The range of the allowable operating frequency f is

(A) 8.19 GHz $\le f \le$ 13.1 GHz

(B) 8.19 GHz $\le f \le$ 12.45 GHz

(C) 6.55 GHz $\le f \le$ 13.1 GHz

(D) 1.64 GHz $\le f \le$ 10.24 GHz

Question Number : 55 **Correct : 2 Wrong : 0**

The permittivity of water at optical frequencies is $1.75\varepsilon_0$. It is found that an isotropic light source at a distance d under water forms an illuminated circular area of radius 5 m, as shown in the figure. The critical angle is θ_c.

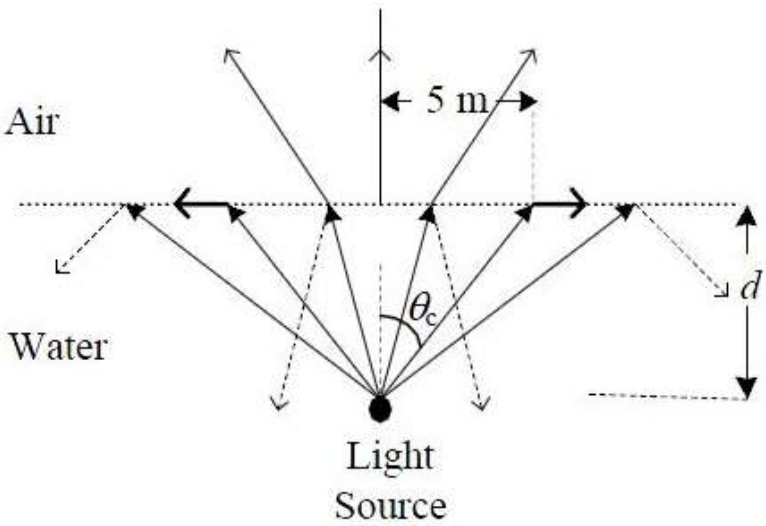

The value of d (in meter) is _____

Question Number : 56 **Correct : 1 Wrong : -0.33**

The ninth and the tenth of this month are Monday and Tuesday _____.

(A) figuratively (B) retrospectively (C) respectively (D) rightfully

Question Number : 57 **Correct : 1 Wrong : -0.33**

It is _____ to read this year's textbook _____the last year's.

(A) easier, than (B) most easy, than (C) easier, from (D) easiest, from

Question Number : 58 **Correct : 1 Wrong : -0.33**

A rule states that in order to drink beer, one must be over 18 years old. In a bar, there are 4 people. P is 16 years old, Q is 25 years old, R is drinking milkshake and S is drinking a beer. What must be checked to ensure that the rule is being followed?

(A) Only P's drink
(B) Only P's drink and S's age
(C) Only S's age
(D) Only P's drink, Q's drink and S's age

Question Number : 59 **Correct : 1 Wrong : -0.33**

Fatima starts from point P, goes North for 3 km, and then East for 4 km to reach point Q. She then turns to face point P and goes 15 km in that direction. She then goes North for 6 km. How far is she from point P, and in which direction should she go to reach point P?

(A) 8 km, East (B) 12 km, North (C) 6 km, East (D) 10 km, North

Question Number : 60 **Correct : 1 Wrong : -0.33**

500 students are taking one or more courses out of Chemistry, Physics, and Mathematics. Registration records indicate course enrolment as follows: Chemistry (329), Physics (186), Mathematics (295), Chemistry and Physics (83), Chemistry and Mathematics (217), and Physics and Mathematics (63). How many students are taking all 3 subjects?

(A) 37 (B) 43 (C) 47 (D) 53

Question Number : 61 **Correct : 2 Wrong : -0.66**

"If you are looking for a history of India, or for an account of the rise and fall of the British Raj, or for the reason of the cleaving of the subcontinent into two mutually antagonistic parts and the effects this mutilation will have in the respective sections, and ultimately on Asia, you will not find it in these pages; for though I have spent a lifetime in the country, I lived too near the seat of events, and was too intimately associated with the actors, to get the perspective needed for the impartial recording of these matters."

Which of the following statements best reflects the author's opinion?

(A) An intimate association does not allow for the necessary perspective.
(B) Matters are recorded with an impartial perspective.
(C) An intimate association offers an impartial perspective.
(D) Actors are typically associated with the impartial recording of matters.

Question Number : 62 **Correct : 2 Wrong : -0.66**

Each of P, Q, R, S, W, X, Y and Z has been married at most once. X and Y are married and have two children P and Q. Z is the grandfather of the daughter S of P. Further, Z and W are married and are parents of R. Which one of the following must necessarily be FALSE?

(A) X is the mother-in-law of R
(B) P and R are not married to each other
(C) P is a son of X and Y
(D) Q cannot be married to R

Question Number : 63 **Correct : 2 Wrong : -0.66**

1200 men and 500 women can build a bridge in 2 weeks. 900 men and 250 women will take 3 weeks to build the same bridge. How many men will be needed to build the bridge in one week?

(A) 3000 (B) 3300 (C) 3600 (D) 3900

Question Number : 64 **Correct : 2 Wrong : -0.66**

The number of 3-digit numbers such that the digit 1 is never to the immediate right of 2 is

(A) 781 (B) 791 (C) 881 (D) 891

Question Number : 65 **Correct : 2 Wrong : -0.66**

A contour line joins locations having the same height above the mean sea level. The following is a contour plot of a geographical region. Contour lines are shown at 25 m intervals in this plot.

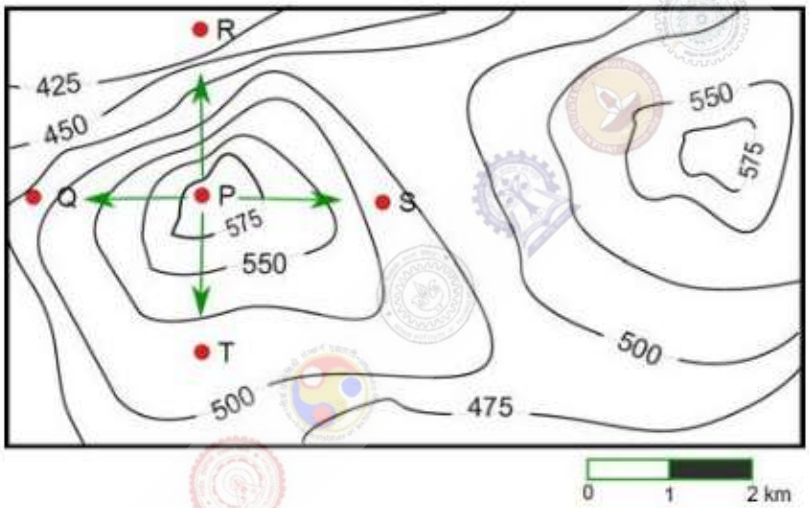

Which of the following is the steepest path leaving from P?

(A) P to Q (B) P to R (C) P to S (D) P to T

Q. No.	Type	Section	Key	Marks
1	NAT	EC-2	4 to 4	1
2	MCQ	EC-2	A	1
3	NAT	EC-2	54.0 to 55.0	1
4	MCQ	EC-2	B	1
5	NAT	EC-2	0.19 to 0.21	1
6	NAT	EC-2	2.12 to 2.16	1
7	MCQ	EC-2	C	1
8	MCQ	EC-2	B	1
9	MCQ	EC-2	C	1
10	MCQ	EC-2	C	1
11	NAT	EC-2	0.45 to 0.55	1
12	NAT	EC-2	3.15 to 3.21	1
13	MCQ	EC-2	A	1
14	NAT	EC-2	5.5 to 6.5	1
15	MCQ	EC-2	Mark to all	1
16	MCQ	EC-2	B	1
17	MCQ	EC-2	B	1
18	NAT	EC-2	0.95 to 1.05	1
19	NAT	EC-2	4.99 to 5.01	1
20	MCQ	EC-2	D	1
21	MCQ	EC-2	C	1
22	NAT	EC-2	2.0 to 2.0	1
23	NAT	EC-2	7 to 7	1
24	MCQ	EC-2	C	1
25	NAT	EC-2	48.0 to 51.0	1
26	MCQ	EC-2	C	2
27	MCQ	EC-2	D	2
28	MCQ	EC-2	B	2
29	NAT	EC-2	2.4 to 2.6	2
30	NAT	EC-2	-100.01 to -99.99	2
31	NAT	EC-2	8.0 to 8.3	2
32	NAT	EC-2	-1.01 to -0.99	2
33	NAT	EC-2	7.95 to 8.05	2
34	NAT	EC-2	0.45 to 0.55	2
35	NAT	EC-2	7.0 to 7.0	2
36	NAT	EC-2	6.85 to 6.95	2

37	NAT	EC-2	0.51 to 0.62	2
38	MCQ	EC-2	B	2
39	MCQ	EC-2	A	2
40	MCQ	EC-2	C	2
41	NAT	EC-2	49.0 to 51.0	2
42	NAT	EC-2	1.1 to 1.2	2
43	NAT	EC-2	4 to 4	2
44	NAT	EC-2	50.0 to 50.0	2
45	MCQ	EC-2	C	2
46	NAT	EC-2	0.74 to 0.76	2
47	MCQ	EC-2	D	2
48	MCQ	EC-2	C	2
49	MCQ	EC-2	B	2
50	NAT	EC-2	5.19 to 5.23	2
51	NAT	EC-2	69.9 to 70.1	2
52	MCQ	EC-2	C	2
53	NAT	EC-2	4.55 to 5.55	2
54	MCQ	EC-2	B	2
55	NAT	EC-2	4.2 to 4.4	2
56	MCQ	GA	C	1
57	MCQ	GA	A	1
58	MCQ	GA	B	1
59	MCQ	GA	A	1
60	MCQ	GA	D	1
61	MCQ	GA	A	2
62	MCQ	GA	D	2
63	MCQ	GA	C	2
64	MCQ	GA	C	2
65	MCQ	GA	B	2