# Graduate Aptitude Test in Engineering 2017

**Question Paper Name:** Electronics and Communication Engineering 5th Feb 2017 session 2
**Subject Name:** Electronics and Communication Engineering
**Duration:** 180
**Total Marks:** 100

Organizing Institute:

Indian Institute of Technology Roorkee

**Question Number : 1** **Correct : 1 Wrong : 0**

The rank of the matrix

$$\begin{bmatrix} 1 & -1 & 0 & 0 & 0 \\ 0 & 0 & 1 & -1 & 0 \\ 0 & 1 & -1 & 0 & 0 \\ -1 & 0 & 0 & 0 & 1 \\ 0 & 0 & 0 & 1 & -1 \end{bmatrix}$$

is _____.

**Question Number : 2** **Correct : 1 Wrong : -0.33**

The general solution of the differential equation

$$\frac{d^2y}{dx^2} + 2\frac{dy}{dx} - 5y = 0$$

in terms of arbitrary constants $K_1$ and $K_2$ is

(A) $K_1 e^{(-1+\sqrt{6})x} + K_2 e^{(-1-\sqrt{6})x}$

(B) $K_1 e^{(-1+\sqrt{8})x} + K_2 e^{(-1-\sqrt{8})x}$

(C) $K_1 e^{(-2+\sqrt{6})x} + K_2 e^{(-2-\sqrt{6})x}$

(D) $K_1 e^{(-2+\sqrt{8})x} + K_2 e^{(-2-\sqrt{8})x}$

**Question Number : 3** **Correct : 1 Wrong : 0**

The smaller angle (in degrees) between the planes $x + y + z = 1$ and $2x - y + 2z = 0$ is _____.

**Question Number : 4** **Correct : 1 Wrong : -0.33**

The residues of a function

$$f(z) = \frac{1}{(z-4)(z+1)^3}$$

are

(A) $\frac{-1}{27}$ and $\frac{-1}{125}$

(B) $\frac{1}{125}$ and $\frac{-1}{125}$

(C) $\frac{-1}{27}$ and $\frac{1}{5}$

(D) $\frac{1}{125}$ and $\frac{-1}{5}$

**Question Number : 5** **Correct : 1 Wrong : 0**

In the circuit shown, V is a sinusoidal voltage source. The current I is in phase with voltage V. The ratio $\frac{\text{amplitude of voltage across the capacitor}}{\text{amplitude of voltage across the resistor}}$ is _____.

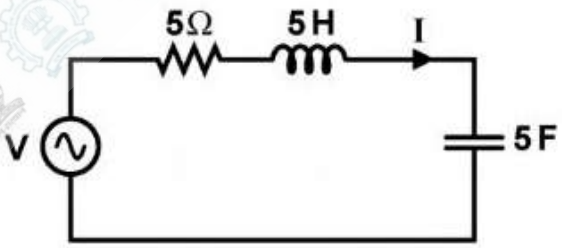


**Question Number : 6** **Correct : 1 Wrong : 0**

A connection is made consisting of resistance A in series with a parallel combination of resistances B and C. Three resistors of value 10 Ω, 5 Ω, 2 Ω are provided. Consider all possible permutations of the given resistors into the positions A, B, C, and identify the configurations with maximum possible overall resistance, and also the ones with minimum possible overall resistance. The ratio of maximum to minimum values of the resistances (up to second decimal place) is _____.

**Question Number : 7** **Correct : 1 Wrong : -0.33**

An LTI system with unit sample response $h[n] = 5\delta[n] - 7\delta[n-1] + 7\delta[n-3] - 5\delta[n-4]$ is a

(A) low-pass filter

(B) high-pass filter

(C) band-pass filter

(D) band-stop filter

**Question Number : 8** **Correct : 1 Wrong : -0.33**

The input $x(t)$ and the output $y(t)$ of a continuous-time system are related as

$$y(t) = \int_{t-T}^{t} x(u)\, du.$$

The system is

(A) linear and time-variant

(B) linear and time-invariant

(C) non-linear and time-variant

(D) non-linear and time-invariant

**Question Number : 9** **Correct : 1 Wrong : -0.33**

An $n$-channel enhancement mode MOSFET is biased at $V_{GS} > V_{TH}$ and $V_{DS} > (V_{GS} - V_{TH})$, where $V_{GS}$ is the gate-to-source voltage, $V_{DS}$ is the drain-to-source voltage and $V_{TH}$ is the threshold voltage. Considering channel length modulation effect to be significant, the MOSFET behaves as a

(A) voltage source with zero output impedance

(B) voltage source with non-zero output impedance

(C) current source with finite output impedance

(D) current source with infinite output impedance

**Question Number : 10** **Correct : 1 Wrong : -0.33**

An *npn* bipolar junction transistor (BJT) is operating in the active region. If the reverse bias across the base-collector junction is increased, then

(A) the effective base width increases and common-emitter current gain increases

(B) the effective base width increases and common-emitter current gain decreases

(C) the effective base width decreases and common-emitter current gain increases

(D) the effective base width decreases and common-emitter current gain decreases

**Question Number : 11** **Correct : 1 Wrong : 0**

Consider an $n$-channel MOSFET having width $W$, length $L$, electron mobility in the channel $\mu_n$ and oxide capacitance per unit area $C_{ox}$. If gate-to-source voltage $V_{GS} = 0.7$ V, drain-to-source voltage $V_{DS} = 0.1$ V, $(\mu_n C_{ox}) = 100\ \mu A/V^2$, threshold voltage $V_{TH} = 0.3$ V and $(W/L) = 50$, then the transconductance $g_m$ (in mA/V) is _____

**Question Number : 12** **Correct : 1 Wrong : 0**

The output $V_0$ of the diode circuit shown in the figure is connected to an averaging DC voltmeter. The reading on the DC voltmeter in Volts, neglecting the voltage drop across the diode, is _____.

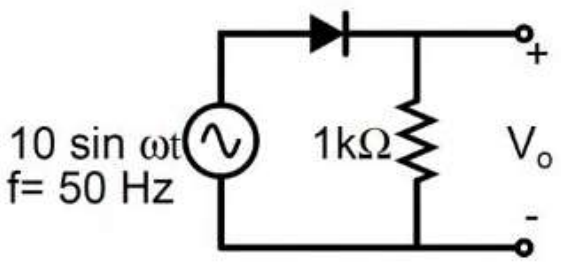

**Question Number : 13** **Correct : 1 Wrong : -0.33**

In the figure, D1 is a real silicon *pn* junction diode with a drop of 0.7 V under forward bias condition and D2 is a Zener diode with breakdown voltage of − 6.8 V. The input $V_{in}(t)$ is a periodic square wave of period T, whose one period is shown in the figure.

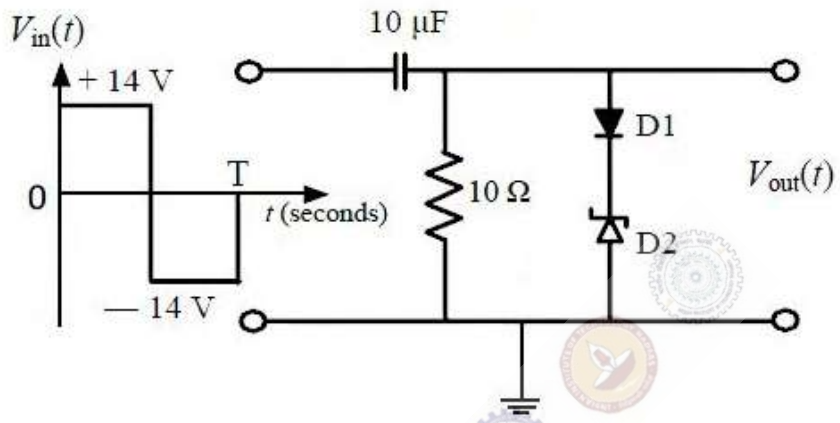


Assuming 10τ << T, where τ is the time constant of the circuit, the maximum and minimum values of the output waveform are respectively,

(A) 7.5 V and −20.5 V

(B) 6.1 V and −21.9 V

(C) 7.5 V and −21.2 V

(D) 6.1 V and −22.6 V

**Question Number : 14** **Correct : 1 Wrong : 0**

Consider the circuit shown in the figure. Assume base-to-emitter voltage $V_{BE} = 0.8$ V and common-base current gain ($\alpha$) of the transistor is unity.

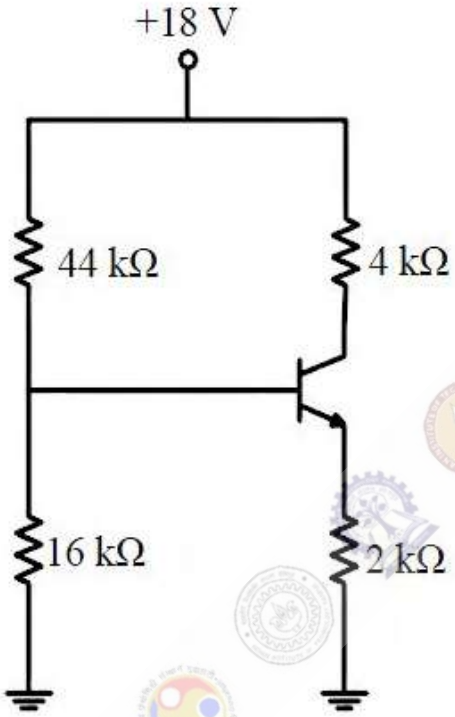


The value of the collector-to-emitter voltage $V_{CE}$ (in volt) is _____

**Question Number : 15** **Correct : 1 Wrong : -0.33**

For the circuit shown in the figure, $P$ and $Q$ are the inputs and $Y$ is the output.

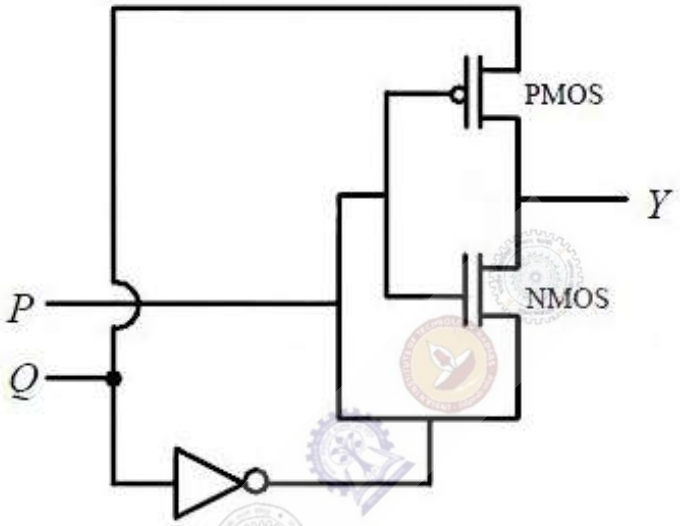


The logic implemented by the circuit is

(A) XNOR (B) XOR (C) NOR (D) OR

**Question Number : 16** **Correct : 1 Wrong : -0.33**

Consider the circuit shown in the figure.

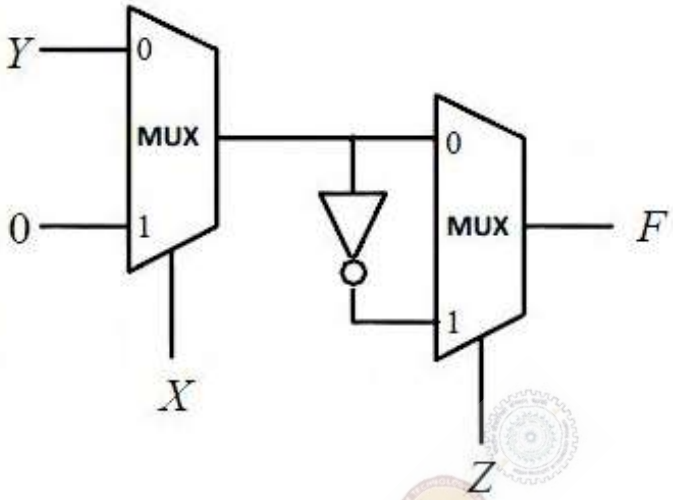


The Boolean expression $F$ implemented by the circuit is

(A) $\bar{X}\,\bar{Y}\,\bar{Z} + X\,Y + \bar{Y}\,Z$

(B) $\bar{X}\,Y\,\bar{Z} + X\,Z + \bar{Y}\,Z$

(C) $\bar{X}\,Y\,\bar{Z} + X\,Y + \bar{Y}\,Z$

(D) $\bar{X}\,\bar{Y}\,\bar{Z} + X\,Z + \bar{Y}\,Z$

**Question Number : 17** **Correct : 1 Wrong : -0.33**

In a DRAM,

(A) periodic refreshing is not required

(B) information is stored in a capacitor

(C) information is stored in a latch

(D) both read and write operations can be performed simultaneously

**Question Number : 18** **Correct : 1 Wrong : 0**

For the system shown in the figure, $Y(s)/X(s) =$ _____

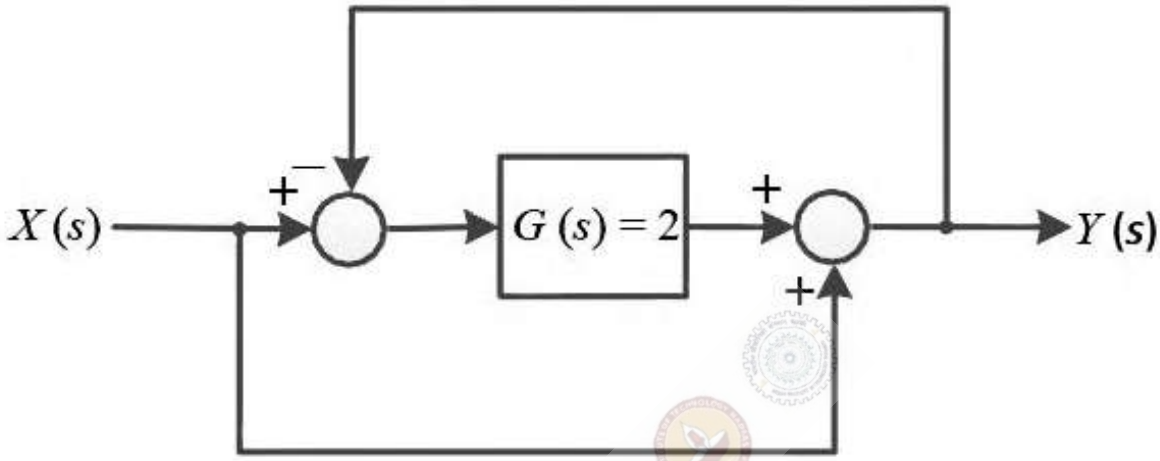


**Question Number : 19** **Correct : 1 Wrong : 0**

Consider the state space realization

$$\begin{bmatrix}\dot{x}_1(t)\\ \dot{x}_2(t)\end{bmatrix} = \begin{bmatrix}0 & 0\\ 0 & -9\end{bmatrix}\begin{bmatrix}x_1(t)\\ x_2(t)\end{bmatrix} + \begin{bmatrix}0\\ 45\end{bmatrix}u(t)\,,\ \text{with the initial condition}\ \begin{bmatrix}x_1(0)\\ x_2(0)\end{bmatrix} = \begin{bmatrix}0\\ 0\end{bmatrix},$$

where $u(t)$ denotes the unit step function. The value of $\lim_{t\to\infty}\left|\sqrt{x_1^2(t)+x_2^2(t)}\right|$ is _____.

**Question Number : 20** **Correct : 1 Wrong : -0.33**

Which of the following statements is **incorrect**?

(A) Lead compensator is used to reduce the settling time.

(B) Lag compensator is used to reduce the steady state error.

(C) Lead compensator may increase the order of a system.

(D) Lag compensator always stabilizes an unstable system.

**Question Number : 21** **Correct : 1 Wrong : -0.33**

Which one of the following graphs shows the Shannon capacity (channel capacity) in bits of a memoryless binary symmetric channel with crossover probability $p$?

(A)

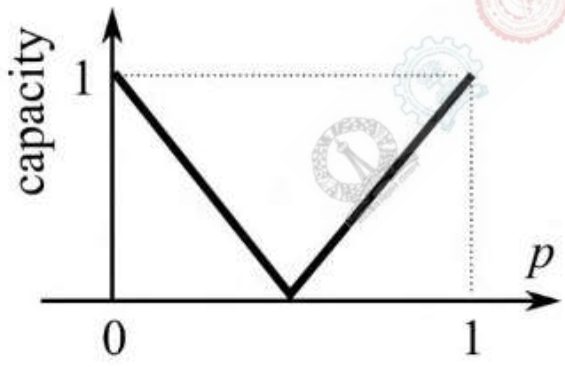


(B)

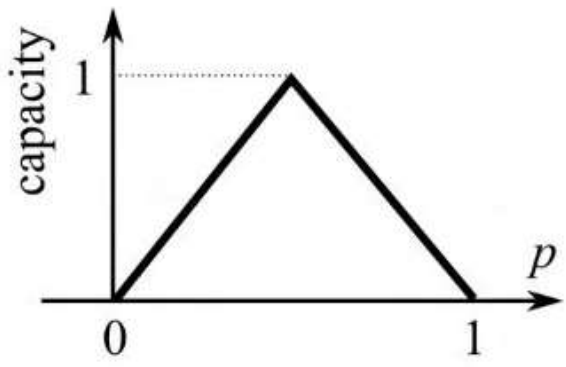


(C)

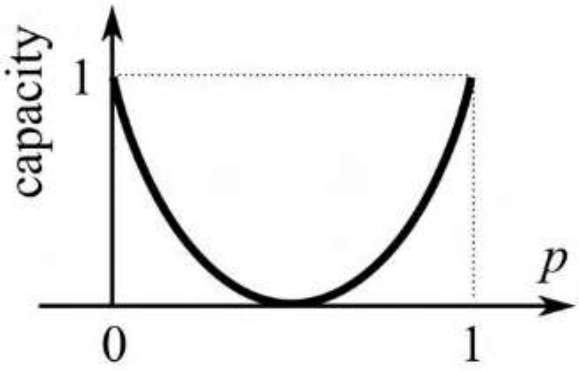


(D)

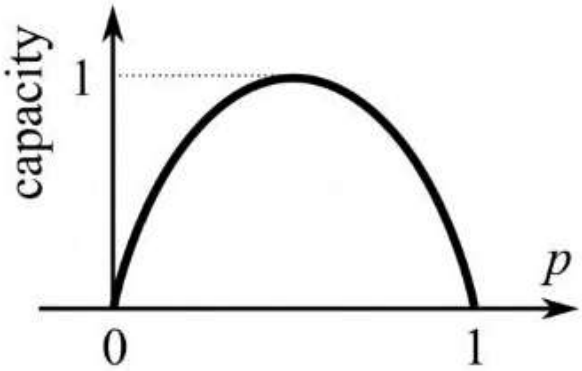

## Question Number : 22 Correct : 1 Wrong : 0

Consider the random process

$$X(t) = U + Vt,$$

where $U$ is a zero-mean Gaussian random variable and $V$ is a random variable uniformly distributed between 0 and 2. Assume that $U$ and $V$ are statistically independent. The mean value of the random process at $t = 2$ is _____

## Question Number : 23 Correct : 1 Wrong : 0

A sinusoidal message signal is converted to a PCM signal using a uniform quantizer. The required signal-to-quantization noise ratio (SQNR) at the output of the quantizer is 40 dB. The minimum number of bits per sample needed to achieve the desired SQNR is _____

## Question Number : 24 Correct : 1 Wrong : -0.33

Two conducting spheres S1 and S2 of radii $a$ and $b$ ($b > a$) respectively, are placed far apart and connected by a long, thin conducting wire, as shown in the figure.

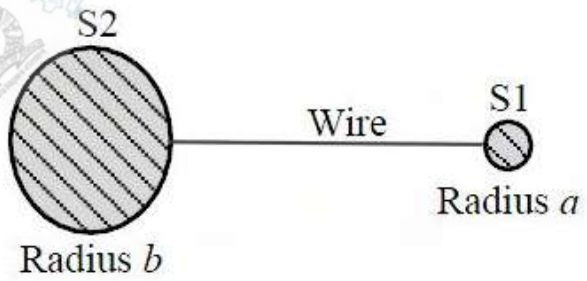


For some charge placed on this structure, the potential and surface electric field on S1 are $V_a$ and $E_a$, and that on S2 are $V_b$ and $E_b$, respectively. Then, which of the following is **CORRECT**?

(A) $V_a = V_b$ and $E_a < E_b$

(B) $V_a > V_b$ and $E_a > E_b$

(C) $V_a = V_b$ and $E_a > E_b$

(D) $V_a > V_b$ and $E_a = E_b$

**Question Number : 25** **Correct : 1 Wrong : 0**

A two-wire transmission line terminates in a television set. The VSWR measured on the line is 5.8. The percentage of power that is reflected from the television set is _____

**Question Number : 26** **Correct : 2 Wrong : -0.66**

The values of the integrals

$$\int_0^1 \left( \int_0^1 \frac{x-y}{(x+y)^3} dy \right) dx$$

and

$$\int_0^1 \left( \int_0^1 \frac{x-y}{(x+y)^3} dx \right) dy$$

are

(A) same and equal to 0.5

(B) same and equal to − 0.5

(C) 0.5 and − 0.5, respectively

(D) − 0.5 and 0.5, respectively

**Question Number : 27** **Correct : 2 Wrong : -0.66**

An integral $I$ over a counterclockwise circle $C$ is given by

$$I = \oint_C \frac{z^2-1}{z^2+1} e^z \, dz.$$

If $C$ is defined as $|z| = 3$, then the value of $I$ is

(A) $-\pi i \sin(1)$ (B) $-2\pi i \sin(1)$ (C) $-3\pi i \sin(1)$ (D) $-4\pi i \sin(1)$

**Question Number : 28** **Correct : 2 Wrong : -0.66**

If the vector function $\vec{F} = \widehat{a_x}(3y - k_1 z) + \widehat{a_y}(k_2 x - 2z) - \widehat{a_z}(k_3 y + z)$ is irrotational, then the values of the constants $k_1$, $k_2$ and $k_3$, respectively, are

(A) 0.3, −2.5, 0.5 (B) 0.0, 3.0, 2.0

(C) 0.3, 0.33, 0.5 (D) 4.0, 3.0, 2.0

**Question Number : 29** **Correct : 2 Wrong : 0**

Passengers try repeatedly to get a seat reservation in any train running between two stations until they are successful. If there is 40% chance of getting reservation in any attempt by a passenger, then the average number of attempts that passengers need to make to get a seat reserved is _____

**Question Number : 30** **Correct : 2 Wrong : 0**

The minimum value of the function $f(x) = \frac{1}{3}x(x^2 - 3)$ in the interval $-100 \le x \le 100$ occurs at $x =$ _____.

**Question Number : 31** **Correct : 2 Wrong : 0**

The switch in the circuit, shown in the figure, was open for a long time and is closed at $t = 0$.

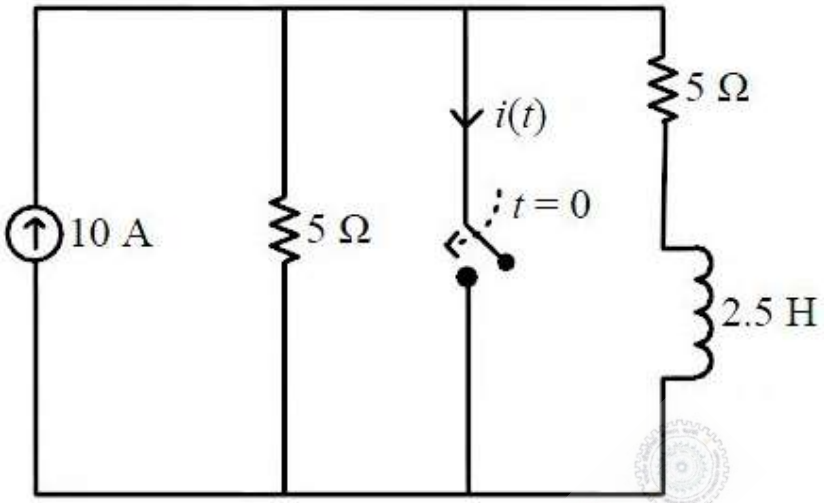


The current $i(t)$ (in ampere) at $t = 0.5$ seconds is _____

**Question Number : 32** **Correct : 2 Wrong : 0**

Consider the circuit shown in the figure.

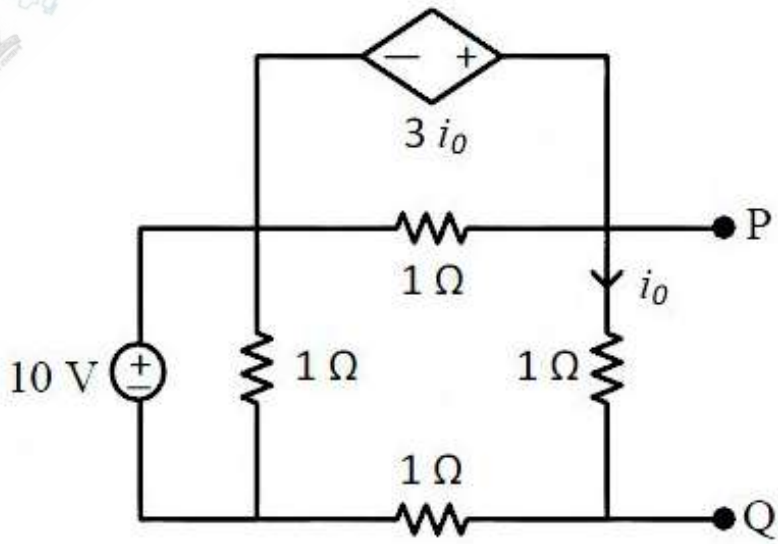


The Thevenin equivalent resistance (in Ω) across P-Q is _____

**Question Number : 33** **Correct : 2 Wrong : 0**

Consider an LTI system with magnitude response

$$|H(f)| = \begin{cases} 1 - \dfrac{|f|}{20}, & |f| \le 20 \\ 0, & |f| > 20 \end{cases}$$

and phase response

$$\arg\{H(f)\} = -2f.$$

If the input to the system is

$$x(t) = 8\cos\left(20\pi t + \frac{\pi}{4}\right) + 16\sin\left(40\pi t + \frac{\pi}{8}\right) + 24\cos\left(80\pi t + \frac{\pi}{16}\right).$$

then the average power of the output signal $y(t)$ is _____

**Question Number : 34** **Correct : 2 Wrong : 0**

The transfer function of a causal LTI system is $H(s) = 1/s$. If the input to the system is $x(t) = [\sin(t)/\pi t]\, u(t)$, where $u(t)$ is a unit step function, the system output $y(t)$ as $t \to \infty$ is _____

**Question Number : 35** **Correct : 2 Wrong : 0**

Consider the parallel combination of two LTI systems shown in the figure.

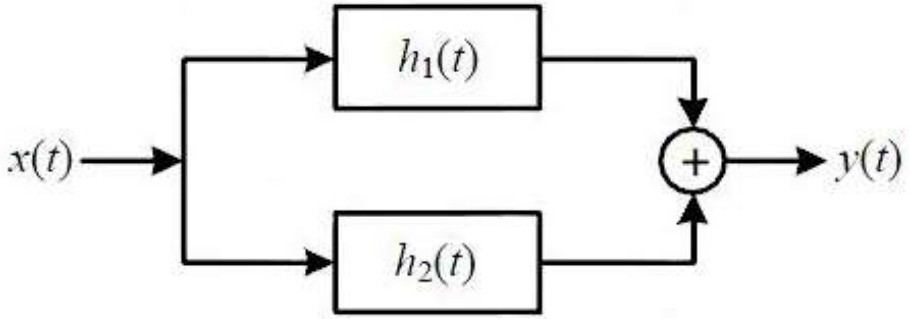


The impulse responses of the systems are

$$h_1(t) = 2\delta(t+2) - 3\delta(t+1)$$

$$h_2(t) = \delta(t-2).$$

If the input $x(t)$ is a unit step signal, then the energy of $y(t)$ is _____

**Question Number : 36** **Correct : 2 Wrong : 0**

A MOS capacitor is fabricated on $p$-type Si (Silicon) where the metal work function is 4.1 eV and electron affinity of Si is 4.0 eV. $E_C - E_F = 0.9$ eV, where $E_C$ and $E_F$ are the conduction band minimum and the Fermi energy levels of Si, respectively. Oxide $\epsilon_r = 3.9$, $\epsilon_o = 8.85 \times 10^{-14}$ F/cm, oxide thickness $t_{ox} = 0.1$ µm and electronic charge $q = 1.6 \times 10^{-19}$ C. If the measured flat band voltage of this capacitor is $-1$ V, then the magnitude of the fixed charge at the oxide-semiconductor interface, in nC/cm$^2$, is _____.

**Question Number : 37** **Correct : 2 Wrong : 0**

For a particular intensity of incident light on a silicon $pn$ junction solar cell, the photocurrent density ($J_L$) is 2.5 mA/cm$^2$ and the open-circuit voltage ($V_{oc}$) is 0.451 V. Consider thermal voltage ($V_T$) to be 25 mV. If the intensity of the incident light is increased by 20 times, assuming that the temperature remains unchanged, $V_{oc}$ (in volts) will be _____

**Question Number : 38** **Correct : 2 Wrong : -0.66**

Two $n$-channel MOSFETs, T1 and T2, are identical in all respects except that the width of T2 is double that of T1. Both the transistors are biased in the saturation region of operation, but the gate overdrive voltage ($V_{GS} - V_{TH}$) of T2 is double that of T1, where $V_{GS}$ and $V_{TH}$ are the gate-to-source voltage and threshold voltage of the transistors, respectively. If the drain current and transconductance of T1 are $I_{D1}$ and $g_{m1}$ respectively, the corresponding values of these two parameters for T2 are

(A) $8I_{D1}$ and $2g_{m1}$ (B) $8I_{D1}$ and $4g_{m1}$ (C) $4I_{D1}$ and $4g_{m1}$ (D) $4I_{D1}$ and $2g_{m1}$

**Question Number : 39** **Correct : 2 Wrong : -0.66**

An abrupt $pn$ junction (located at $x = 0$) is uniformly doped on both $p$ and $n$ sides. The width of the depletion region is $W$ and the electric field variation in the $x$-direction is $E(x)$. Which of the following figures represents the electric field profile near the $pn$ junction?

(A)

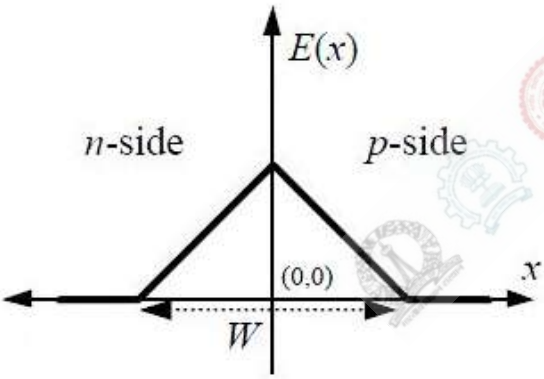


(B)

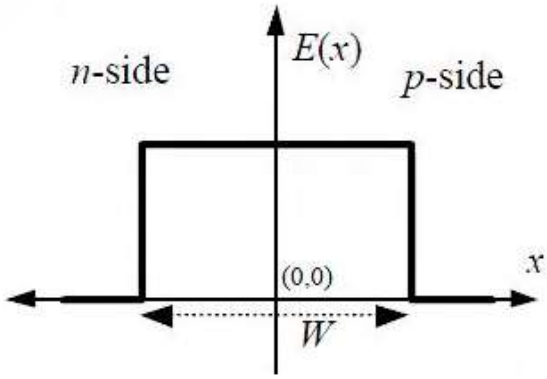


(C)

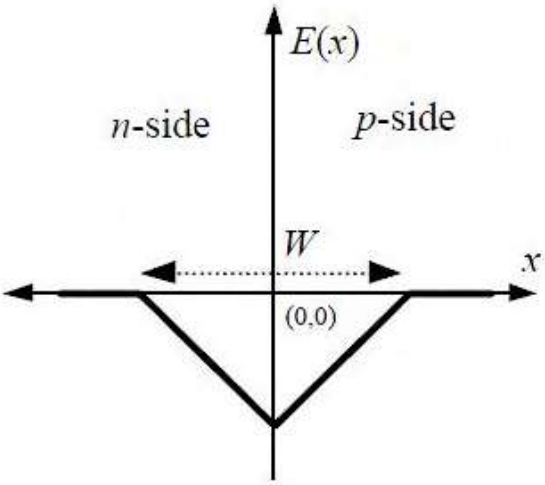


(D)

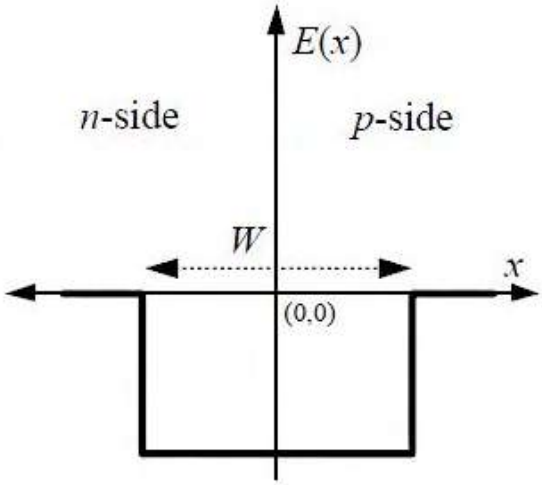

**Question Number : 40** **Correct : 2 Wrong : -0.66**

Assuming that transistors $M_1$ and $M_2$ are identical and have a threshold voltage of 1 V, the state of transistors $M_1$ and $M_2$ are respectively

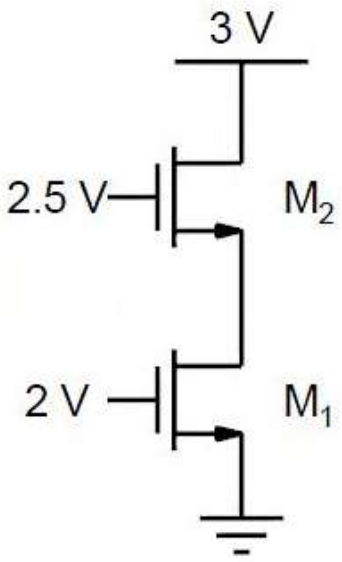


(A) Saturation, Saturation

(B) Linear, Linear

(C) Linear, Saturation

(D) Saturation, Linear

**Question Number : 41** **Correct : 2 Wrong : 0**

In the circuit shown, transistors $Q_1$ and $Q_2$ are biased at a collector current of 2.6 mA. Assuming that transistor current gains are sufficiently large to assume collector current equal to emitter current and thermal voltage of 26 mV, the magnitude of voltage gain $V_o/V_s$ in the mid-band frequency range is _____ (up to second decimal place).

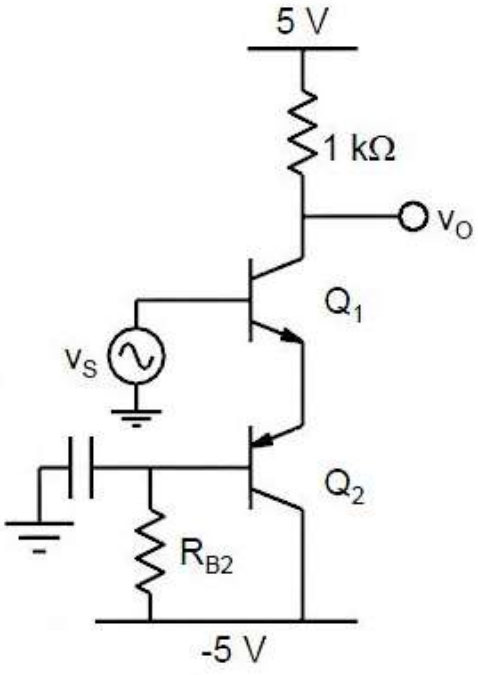

**Question Number : 42** **Correct : 2 Wrong : 0**

In the voltage reference circuit shown in the figure, the op-amp is ideal and the transistors $Q_1$, $Q_2, \ldots, Q_{32}$ are identical in all respects and have infinitely large values of common-emitter current gain ($\beta$). The collector current ($I_c$) of the transistors is related to their base-emitter voltage ($V_{BE}$) by the relation $I_C = I_S \exp(V_{BE}/V_T)$, where $I_S$ is the saturation current. Assume that the voltage $V_p$ shown in the figure is 0.7 V and the thermal voltage $V_T = 26$ mV.

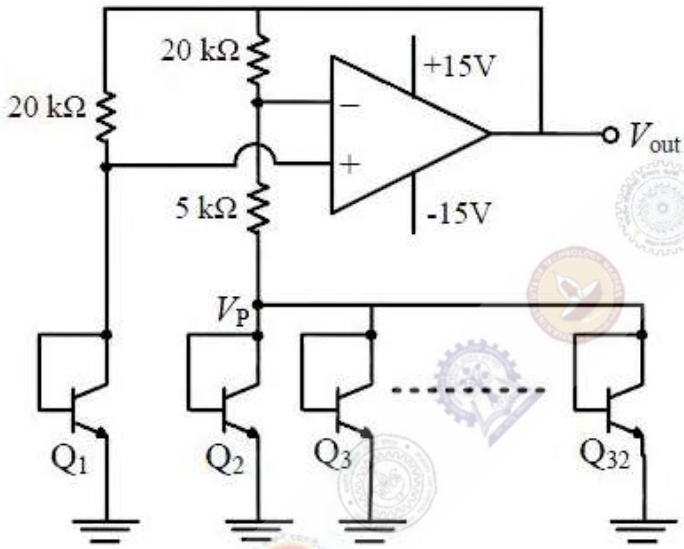


The output voltage $V_{out}$ (in volts) is _____

**Question Number : 43** **Correct : 2 Wrong : 0**

The state diagram of a finite state machine (FSM) designed to detect an overlapping sequence of three bits is shown in the figure. The FSM has an input 'In' and an output 'Out'. The initial state of the FSM is $S_0$.

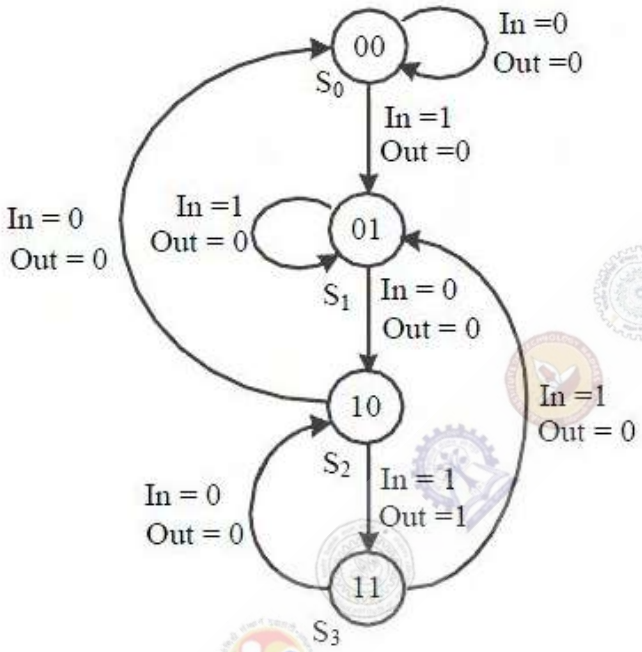


If the input sequence is 10101101001101, starting with the left-most bit, then the number of times 'Out' will be 1 is _____

**Question Number : 44** **Correct : 2 Wrong : 0**

Figure I shows a 4-bit ripple carry adder realized using full adders and Figure II shows the circuit of a full-adder (FA). The propagation delay of the XOR, AND and OR gates in Figure II are 20 ns, 15 ns and 10 ns, respectively. Assume all the inputs to the 4-bit adder are initially reset to 0.

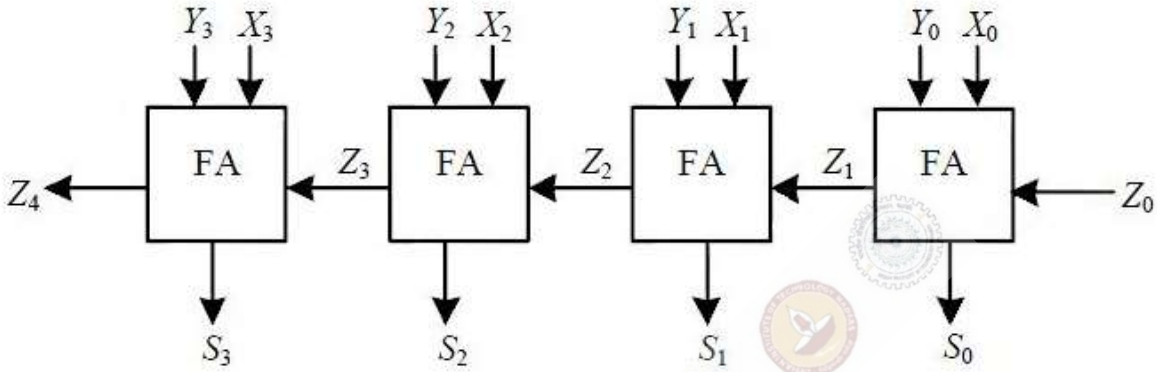


Figure I

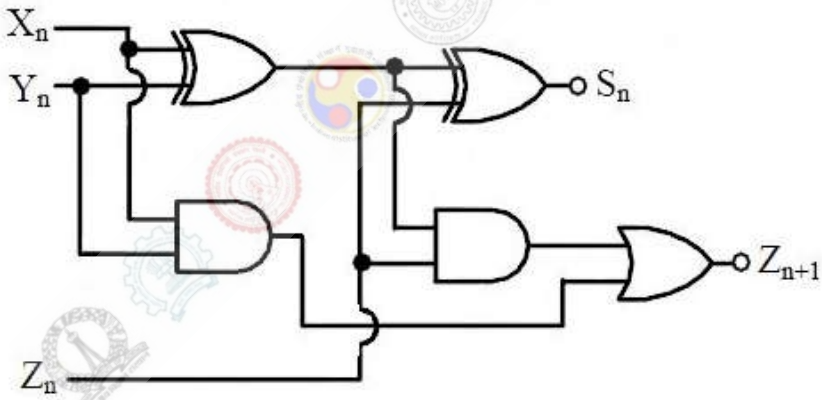


Figure II

At $t = 0$, the inputs to the 4-bit adder are changed to $X_3X_2X_1X_0 = 1100$, $Y_3Y_2Y_1Y_0 = 0100$ and $Z_0 = 1$. The output of the ripple carry adder will be stable at $t$ (in ns) = _____

**Question Number : 45** **Correct : 2 Wrong : -0.66**

A programmable logic array (PLA) is shown in the figure.

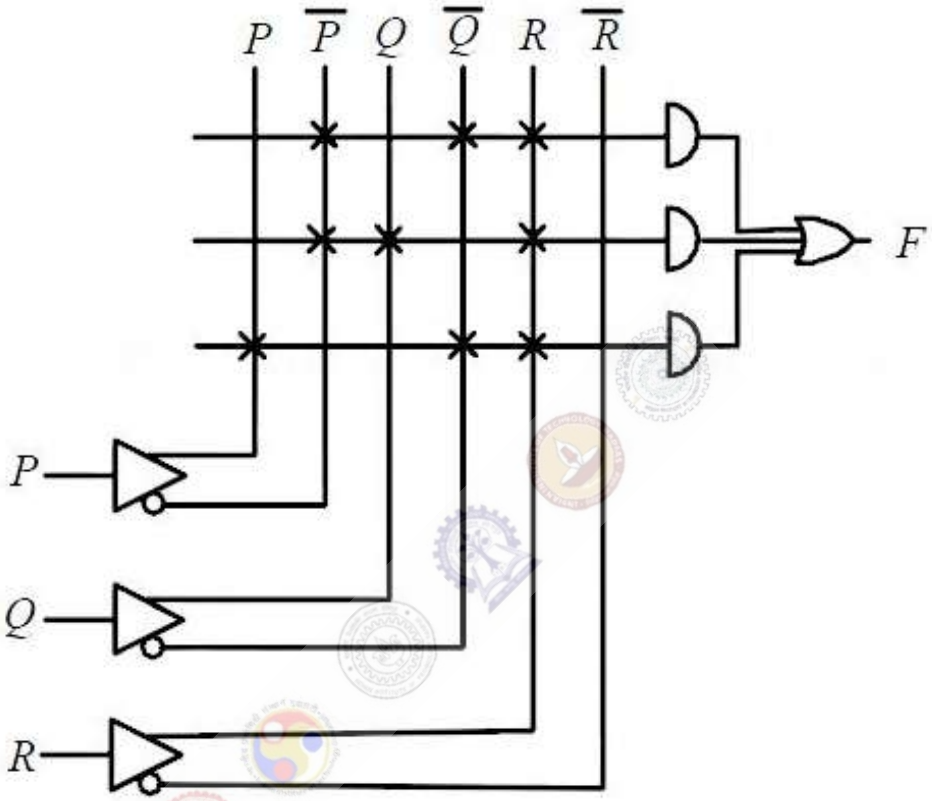


The Boolean function $F$ implemented is

(A) $\bar{P}\,\bar{Q}\,R + \bar{P}\,Q\,R + P\,\bar{Q}\,\bar{R}$

(B) $(\bar{P} + \bar{Q} + R)\,(\bar{P} + Q + R)\,(P + \bar{Q} + \bar{R})$

(C) $\bar{P}\,\bar{Q}\,R + \bar{P}\,Q\,R + P\,\bar{Q}\,R$

(D) $(\bar{P} + \bar{Q} + R)\,(\bar{P} + Q + R)\,(P + \bar{Q} + R)$

**Question Number : 46** **Correct : 2 Wrong : 0**

A unity feedback control system is characterized by the open-loop transfer function

$$G(s) = \frac{2(s+1)}{s^3 + ks^2 + 2s + 1}$$

The value of $k$ for which the system oscillates at 2 rad/s is _____

**Question Number : 47** **Correct : 2 Wrong : -0.66**

A second-order LTI system is described by the following state equations,

$$\frac{d}{dt}x_1(t) - x_2(t) = 0$$

$$\frac{d}{dt}x_2(t) + 2x_1(t) + 3x_2(t) = r(t)$$

where $x_1(t)$ and $x_2(t)$ are the two state variables and $r(t)$ denotes the input. The output $c(t) = x_1(t)$. The system is

(A) undamped (oscillatory)

(B) underdamped

(C) critically damped

(D) overdamped

**Question Number : 48** **Correct : 2 Wrong : -0.66**

A unity feedback control system is characterized by the open-loop transfer function

$$G(s) = \frac{10K(s+2)}{s^3 + 3s^2 + 10}$$

The Nyquist path and the corresponding Nyquist plot of $G(s)$ are shown in the figures below.

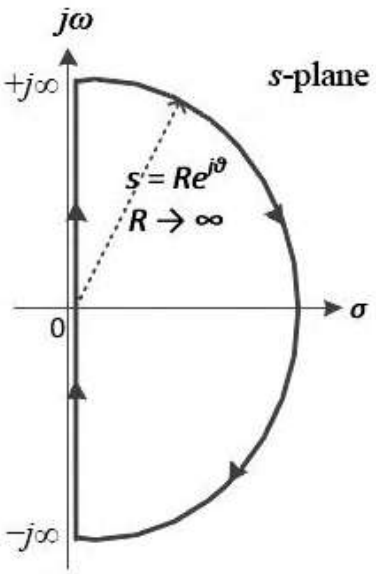


Nyquist Path for $G(s)$

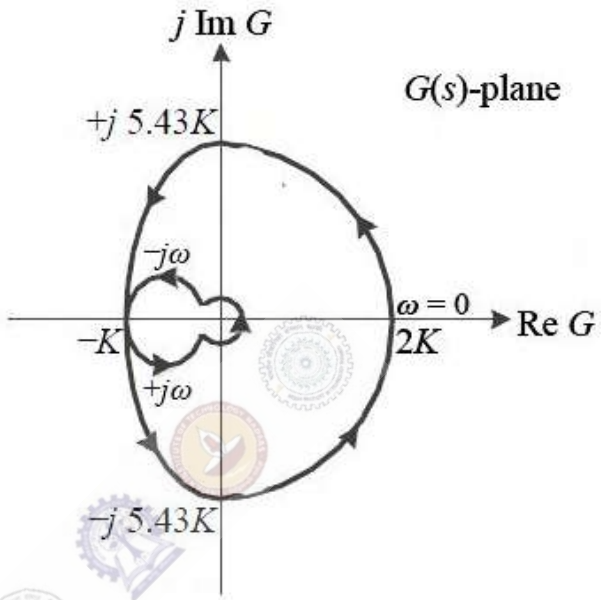


Nyquist Plot of $G(s)$

If $0 < K < 1$, then the number of poles of the closed-loop transfer function that lie in the right-half of the $s$-plane is

(A) 0 (B) 1 (C) 2 (D) 3

**Question Number : 49** **Correct : 2 Wrong : -0.66**

The signal $x(t) = \sin(14000\pi t)$, where $t$ is in seconds, is sampled at a rate of 9000 samples per second. The sampled signal is the input to an ideal lowpass filter with frequency response $H(f)$ as follows:

$$H(f) = \begin{cases} 1, & |f| \le 12 \text{ kHz} \\ 0, & |f| > 12 \text{ kHz}. \end{cases}$$

What is the number of sinusoids in the output and their frequencies in kHz?

(A) Number = 1, frequency = 7

(B) Number = 3, frequencies = 2, 7, 11

(C) Number = 2, frequencies = 2, 7

(D) Number = 2, frequencies = 7, 11

**Question Number : 50** **Correct : 2 Wrong : 0**

The unmodulated carrier power in an AM transmitter is 5 kW. This carrier is modulated by a sinusoidal modulating signal. The maximum percentage of modulation is 50%. If it is reduced to 40%, then the maximum unmodulated carrier power (in kW) that can be used without overloading the transmitter is _____

**Question Number : 51** **Correct : 2 Wrong : 0**

A modulating signal given by $x(t) = 5\sin(4\pi 10^3 t - 10\pi\cos 2\pi\, 10^3 t)$ V is fed to a phase modulator with phase deviation constant $k_p = 5$ rad/V. If the carrier frequency is 20 kHz, the instantaneous frequency (in kHz) at $t = 0.5$ ms is _____

**Question Number : 52** **Correct : 2 Wrong : -0.66**

Consider a binary memoryless channel characterized by the transition probability diagram shown in the figure.

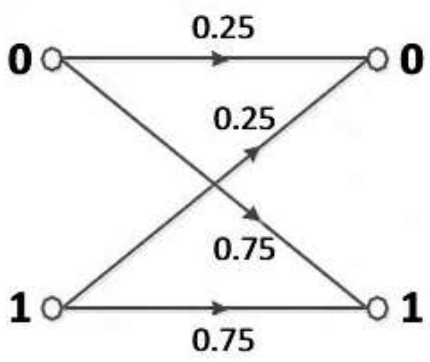


The channel is

(A) lossless

(B) noiseless

(C) useless

(D) deterministic

**Question Number : 53** **Correct : 2 Wrong : 0**

An electron ($q_1$) is moving in free space with velocity $10^5$ m/s towards a stationary electron ($q_2$) far away. The closest distance that this moving electron gets to the stationary electron before the repulsive force diverts its path is _____ $\times 10^{-8}$ m.

[Given, mass of electron $m = 9.11\times10^{-31}$ kg, charge of electron $e = -1.6\times10^{-19}$ C, and permittivity $\varepsilon_0 = (1/36\pi)\times10^{-9}$ F/m]

**Question Number : 54** **Correct : 2 Wrong : -0.66**

Standard air-filled rectangular waveguides of dimensions $a = 2.29$ cm and $b = 1.02$ cm are designed for radar applications. It is desired that these waveguides operate only in the dominant $TE_{10}$ mode with the operating frequency at least 25% above the cutoff frequency of the $TE_{10}$ mode but not higher than 95% of the next higher cutoff frequency. The range of the allowable operating frequency $f$ is

(A) 8.19 GHz $\le f \le$ 13.1 GHz

(B) 8.19 GHz $\le f \le$ 12.45 GHz

(C) 6.55 GHz $\le f \le$ 13.1 GHz

(D) 1.64 GHz $\le f \le$ 10.24 GHz

**Question Number : 55** **Correct : 2 Wrong : 0**

The permittivity of water at optical frequencies is $1.75\varepsilon_0$. It is found that an isotropic light source at a distance $d$ under water forms an illuminated circular area of radius 5 m, as shown in the figure. The critical angle is $\theta_c$.

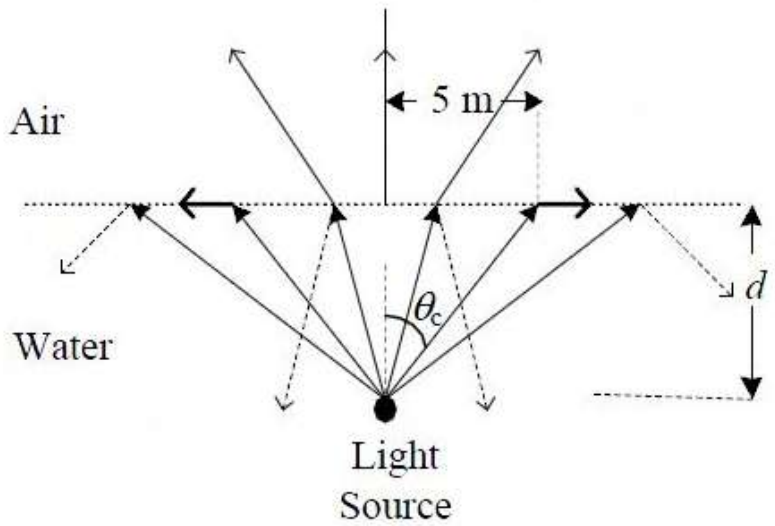


The value of $d$ (in meter) is _____

**Question Number : 56** **Correct : 1 Wrong : -0.33**

The ninth and the tenth of this month are Monday and Tuesday _____.

(A) figuratively (B) retrospectively (C) respectively (D) rightfully

**Question Number : 57** **Correct : 1 Wrong : -0.33**

It is _____ to read this year's textbook _____the last year's.

(A) easier, than (B) most easy, than (C) easier, from (D) easiest, from

**Question Number : 58** **Correct : 1 Wrong : -0.33**

A rule states that in order to drink beer, one must be over 18 years old. In a bar, there are 4 people. P is 16 years old, Q is 25 years old, R is drinking milkshake and S is drinking a beer. What must be checked to ensure that the rule is being followed?

(A) Only P's drink
(B) Only P's drink and S's age
(C) Only S's age
(D) Only P's drink, Q's drink and S's age

**Question Number : 59** **Correct : 1 Wrong : -0.33**

Fatima starts from point P, goes North for 3 km, and then East for 4 km to reach point Q. She then turns to face point P and goes 15 km in that direction. She then goes North for 6 km. How far is she from point P, and in which direction should she go to reach point P?

(A) 8 km, East (B) 12 km, North (C) 6 km, East (D) 10 km, North

**Question Number : 60** **Correct : 1 Wrong : -0.33**

500 students are taking one or more courses out of Chemistry, Physics, and Mathematics. Registration records indicate course enrolment as follows: Chemistry (329), Physics (186), Mathematics (295), Chemistry and Physics (83), Chemistry and Mathematics (217), and Physics and Mathematics (63). How many students are taking all 3 subjects?

(A) 37 (B) 43 (C) 47 (D) 53

**Question Number : 61** **Correct : 2 Wrong : -0.66**

"If you are looking for a history of India, or for an account of the rise and fall of the British Raj, or for the reason of the cleaving of the subcontinent into two mutually antagonistic parts and the effects this mutilation will have in the respective sections, and ultimately on Asia, you will not find it in these pages; for though I have spent a lifetime in the country, I lived too near the seat of events, and was too intimately associated with the actors, to get the perspective needed for the impartial recording of these matters."

Which of the following statements best reflects the author's opinion?

(A) An intimate association does not allow for the necessary perspective.
(B) Matters are recorded with an impartial perspective.
(C) An intimate association offers an impartial perspective.
(D) Actors are typically associated with the impartial recording of matters.

**Question Number : 62** **Correct : 2 Wrong : -0.66**

Each of P, Q, R, S, W, X, Y and Z has been married at most once. X and Y are married and have two children P and Q. Z is the grandfather of the daughter S of P. Further, Z and W are married and are parents of R. Which one of the following must necessarily be FALSE?

(A) X is the mother-in-law of R
(B) P and R are not married to each other
(C) P is a son of X and Y
(D) Q cannot be married to R

**Question Number : 63** **Correct : 2 Wrong : -0.66**

1200 men and 500 women can build a bridge in 2 weeks. 900 men and 250 women will take 3 weeks to build the same bridge. How many men will be needed to build the bridge in one week?

(A) 3000 (B) 3300 (C) 3600 (D) 3900

**Question Number : 64** **Correct : 2 Wrong : -0.66**

The number of 3-digit numbers such that the digit 1 is never to the immediate right of 2 is

(A) 781 (B) 791 (C) 881 (D) 891

**Question Number : 65** **Correct : 2 Wrong : -0.66**

A contour line joins locations having the same height above the mean sea level. The following is a contour plot of a geographical region. Contour lines are shown at 25 m intervals in this plot.

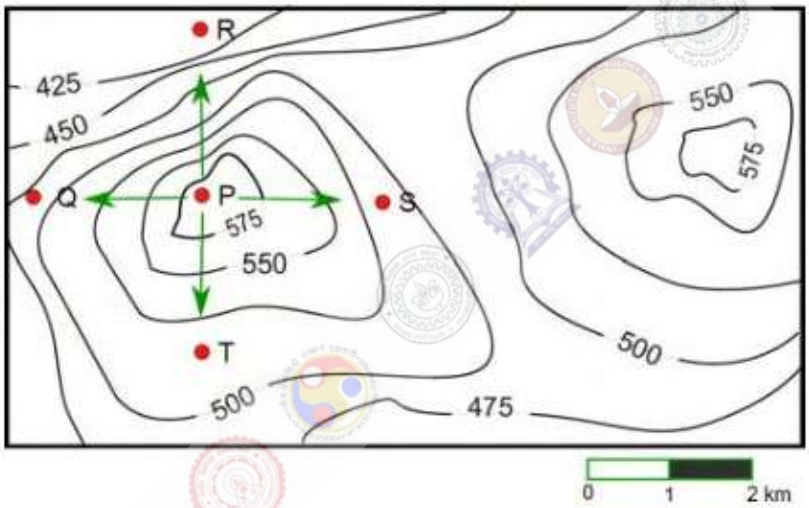


Which of the following is the steepest path leaving from P?

(A) P to Q (B) P to R (C) P to S (D) P to T

| Q. No. | Type | Section | Key | Marks |
|---|---|---|---|---|
| 1 | NAT | EC-2 | 4 to 4 | 1 |
| 2 | MCQ | EC-2 | A | 1 |
| 3 | NAT | EC-2 | 54.0 to 55.0 | 1 |
| 4 | MCQ | EC-2 | B | 1 |
| 5 | NAT | EC-2 | 0.19 to 0.21 | 1 |
| 6 | NAT | EC-2 | 2.12 to 2.16 | 1 |
| 7 | MCQ | EC-2 | C | 1 |
| 8 | MCQ | EC-2 | B | 1 |
| 9 | MCQ | EC-2 | C | 1 |
| 10 | MCQ | EC-2 | C | 1 |
| 11 | NAT | EC-2 | 0.45 to 0.55 | 1 |
| 12 | NAT | EC-2 | 3.15 to 3.21 | 1 |
| 13 | MCQ | EC-2 | A | 1 |
| 14 | NAT | EC-2 | 5.5 to 6.5 | 1 |
| 15 | MCQ | EC-2 | Mark to all | 1 |
| 16 | MCQ | EC-2 | B | 1 |
| 17 | MCQ | EC-2 | B | 1 |
| 18 | NAT | EC-2 | 0.95 to 1.05 | 1 |
| 19 | NAT | EC-2 | 4.99 to 5.01 | 1 |
| 20 | MCQ | EC-2 | D | 1 |
| 21 | MCQ | EC-2 | C | 1 |
| 22 | NAT | EC-2 | 2.0 to 2.0 | 1 |
| 23 | NAT | EC-2 | 7 to 7 | 1 |
| 24 | MCQ | EC-2 | C | 1 |
| 25 | NAT | EC-2 | 48.0 to 51.0 | 1 |
| 26 | MCQ | EC-2 | C | 2 |
| 27 | MCQ | EC-2 | D | 2 |
| 28 | MCQ | EC-2 | B | 2 |
| 29 | NAT | EC-2 | 2.4 to 2.6 | 2 |
| 30 | NAT | EC-2 | -100.01 to -99.99 | 2 |
| 31 | NAT | EC-2 | 8.0 to 8.3 | 2 |
| 32 | NAT | EC-2 | -1.01 to -0.99 | 2 |
| 33 | NAT | EC-2 | 7.95 to 8.05 | 2 |
| 34 | NAT | EC-2 | 0.45 to 0.55 | 2 |
| 35 | NAT | EC-2 | 7.0 to 7.0 | 2 |
| 36 | NAT | EC-2 | 6.85 to 6.95 | 2 |

| | | | | |
|---|---|---|---|---|
| **37** | NAT | EC-2 | 0.51 to 0.62 | 2 |
| **38** | MCQ | EC-2 | B | 2 |
| **39** | MCQ | EC-2 | A | 2 |
| **40** | MCQ | EC-2 | C | 2 |
| **41** | NAT | EC-2 | 49.0 to 51.0 | 2 |
| **42** | NAT | EC-2 | 1.1 to 1.2 | 2 |
| **43** | NAT | EC-2 | 4 to 4 | 2 |
| **44** | NAT | EC-2 | 50.0 to 50.0 | 2 |
| **45** | MCQ | EC-2 | C | 2 |
| **46** | NAT | EC-2 | 0.74 to 0.76 | 2 |
| **47** | MCQ | EC-2 | D | 2 |
| **48** | MCQ | EC-2 | C | 2 |
| **49** | MCQ | EC-2 | B | 2 |
| **50** | NAT | EC-2 | 5.19 to 5.23 | 2 |
| **51** | NAT | EC-2 | 69.9 to 70.1 | 2 |
| **52** | MCQ | EC-2 | C | 2 |
| **53** | NAT | EC-2 | 4.55 to 5.55 | 2 |
| **54** | MCQ | EC-2 | B | 2 |
| **55** | NAT | EC-2 | 4.2 to 4.4 | 2 |
| **56** | MCQ | GA | C | 1 |
| **57** | MCQ | GA | A | 1 |
| **58** | MCQ | GA | B | 1 |
| **59** | MCQ | GA | A | 1 |
| **60** | MCQ | GA | D | 1 |
| **61** | MCQ | GA | A | 2 |
| **62** | MCQ | GA | D | 2 |
| **63** | MCQ | GA | C | 2 |
| **64** | MCQ | GA | C | 2 |
| **65** | MCQ | GA | B | 2 |