EC: Electronics and Communication Engg.

GA - General Aptitude

Q1 - Q5 carry one mark each.

Q.No. 1 The untimely loss of life is a cause of serious global concern as thousands of people get killed_____accidents every year while many other die_____diseases like cardio vascular disease, cancer, etc.

(A) in, of

(B) from, of

(C) during, from

(D) from, from

Q.No. 2 He was not only accused of theft_____of conspiracy.

(A) rather

(B) but also

(C) but even

(D) rather than

Q.No. 3 Select the word that fits the analogy:

Explicit: Implicit :: Express: _____

(A) Impress

(B) Repress

(C) Compress

(D) Suppress

Q.No. 4 The Canadian constitution requires that equal importance be given to English and French. Last year, Air Canada lost a lawsuit, and had to pay a six-figure fine to a French-speaking couple after they filed complaints about formal in-flight announcements in English lasting 15 seconds, as opposed to informal 5 second messages in French.

The French-speaking couple were upset at _____.

(A) the in-flight announcements being made in English.

(B) the English announcements being clearer than the French ones.

(C) the English announcements being longer than the French ones.

(D) equal importance being given to English and French.

Q.No. 5 A superadditive function $f(\cdot)$ satisfies the following property

$$f(x_1 + x_2) \geq f(x_1) + f(x_2)$$

Which of the following functions is a superadditive function for $x > 1$?

(A) e^x

(B) $\sqrt{x}$

(C) $1/x$

(D) e^{-x}

Q6 - Q10 carry two marks each.

Q.No. 6 The global financial crisis in 2008 is considered to be the most serious world-wide financial crisis, which started with the sub-prime lending crisis in USA in 2007. The sub-prime lending crisis led to the banking crisis in 2008 with the collapse of Lehman Brothers in 2008. The sub-prime lending refers to the provision of loans to those borrowers who may have difficulties in repaying loans, and it arises because of excess liquidity following the East Asian crisis.

Which one of the following sequences shows the correct precedence as per the given passage?

(A) East Asian crisis→ subprime lending crisis →banking crisis→ global financial crisis.

(B) Subprime lending crisis→ global financial crisis→ banking crisis→ East Asian crisis.

(C) Banking crisis→ subprime lending crisis→ global financial crisis → East Asian crisis.

(D) Global financial crisis → East Asian crisis → banking crisis → subprime lending crisis.

Q.No. 7 It is quarter past three in your watch. The angle between the hour hand and the minute hand is _____.

(A) 0°

(B) 7.5°

(C) 15°

(D) 22.5°

Q.No. 8 A circle with centre O is shown in the figure. A rectangle PQRS of maximum possible area is inscribed in the circle. If the radius of the circle is a, then the area of the shaded portion is _____.

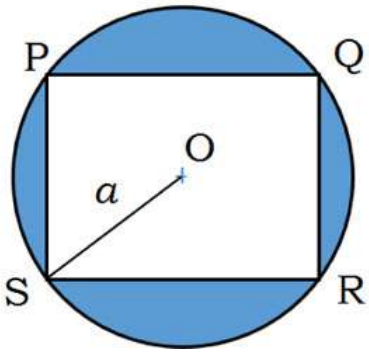

(A) $\pi a^2 - a^2$

(B) $\pi a^2 - \sqrt{2}a^2$

(C) $\pi a^2 - 2a^2$

(D) $\pi a^2 - 3a^2$

Q.No. 9 a, b, c are real numbers. The quadratic equation $ax^2 - bx + c = 0$ has equal roots, which is β, then

(A) $\beta = b/a$

(B) $\beta^2 = ac$

(C) $\beta^3 = bc/(2a^2)$

(D) $b^2 \neq 4ac$

Q.No. 10

The following figure shows the data of students enrolled in 5 years (2014 to 2018) for two schools P and Q. During this period, the ratio of the average number of the students enrolled in school P to the average of the difference of the number of students enrolled in schools P and Q is_____.

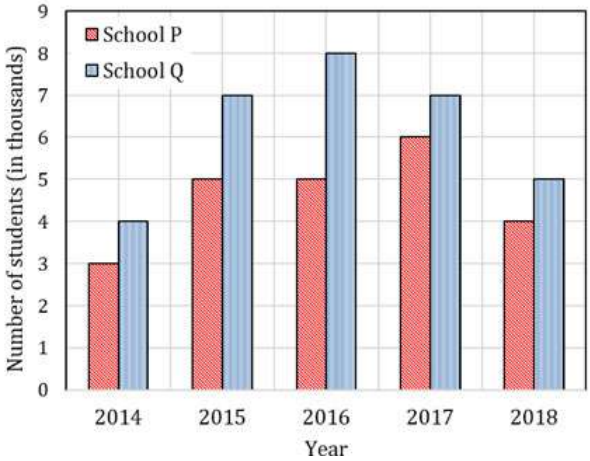

(A) 8 : 23

(B) 23 : 8

(C) 23 : 31

(D) 31 : 23

EC: Electronics and Communication Engg.

Q1 - Q25 carry one mark each.

Q.No. 1 If $\mathbf{v}_1, \mathbf{v}_2, \ldots, \mathbf{v}_6$ are six vectors in $\mathbb{R}^4$, which one of the following statements is FALSE?

(A) It is not necessary that these vectors span $\mathbb{R}^4$.

(B) These vectors are not linearly independent.

(C) Any four of these vectors form a basis for $\mathbb{R}^4$.

(D) If $\{\mathbf{v}_1, \mathbf{v}_3, \mathbf{v}_5, \mathbf{v}_6\}$ spans $\mathbb{R}^4$, then it forms a basis for $\mathbb{R}^4$.

Q.No. 2 For a vector field $\vec{A}$, which one of the following is FALSE?

(A) $\vec{A}$ is solenoidal if $\nabla \cdot \vec{A} = 0$.

(B) $\nabla \times \vec{A}$ is another vector field.

(C) $\vec{A}$ is irrotational if $\nabla^2 \vec{A} = 0$.

(D) $\nabla \times (\nabla \times \vec{A}) = \nabla(\nabla \cdot \vec{A}) - \nabla^2 \vec{A}$

Q.No. 3 The partial derivative of the function

$$f(x, y, z) = e^{1 - x\cos y} + xze^{-1/(1+y^2)}$$

with respect to x at the point $(1, 0, e)$ is

(A) -1

(B) 0

(C) 1

(D) $\frac{1}{e}$

Q.No. 4 The general solution of $\frac{d^2y}{dx^2} - 6\frac{dy}{dx} + 9y = 0$ is

(A) $y = C_1 e^{3x} + C_2 e^{-3x}$

(B) $y = (C_1 + C_2 x)e^{-3x}$

(C) $y = (C_1 + C_2 x)e^{3x}$

(D) $y = C_1 e^{3x}$

Q.No. 5 The output $y[n]$ of a discrete-time system for an input $x[n]$ is

$$y[n] = \max_{-\infty \le k \le n} |x[k]|.$$

The unit impulse response of the system is

(A) 0 for all n.

(B) 1 for all n.

(C) unit step signal $u[n]$.

(D) unit impulse signal $\delta[n]$.

Q.No. 6 A single crystal intrinsic semiconductor is at a temperature of 300 K with effective density of states for holes twice that of electrons. The thermal voltage is 26 mV. The intrinsic Fermi level is shifted from mid-bandgap energy level by

(A) 18.02 meV.

(B) 9.01 meV.

(C) 13.45 meV.

(D) 26.90 meV.

Q.No. 7 Consider the recombination process via bulk traps in a forward biased *pn* homojunction diode. The maximum recombination rate is U_{max}. If the electron and the hole capture cross-sections are equal, which one of the following is FALSE?

(A) With all other parameters unchanged, U_{max} decreases if the intrinsic carrier density is reduced.

(B) U_{max} occurs at the edges of the depletion region in the device.

(C) U_{max} depends exponentially on the applied bias.

(D) With all other parameters unchanged, U_{max} increases if the thermal velocity of the carriers increases.

Q.No. 8 The components in the circuit shown below are ideal. If the op-amp is in positive feedback and the input voltage V_i is a sine wave of amplitude 1 V, the output voltage V_o is

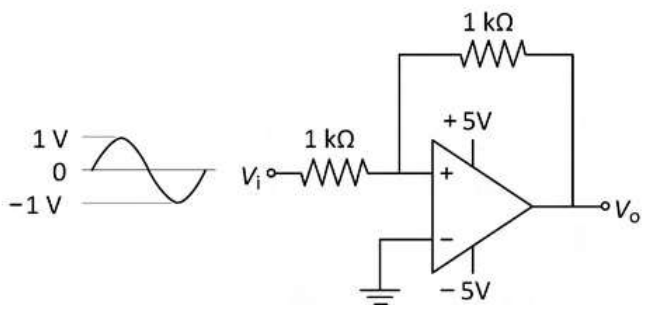

(A) a non-inverted sine wave of 2 V amplitude.

(B) an inverted sine wave of 1 V amplitude.

(C) a square wave of 5 V amplitude.

(D) a constant of either +5 V or −5 V.

Q.No. 9

In the circuit shown below, the Thevenin voltage V_{TH} is

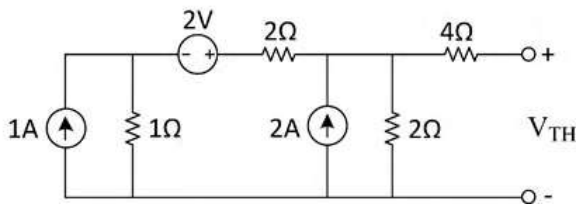

(A) 2.4 V

(B) 2.8 V

(C) 3.6 V

(D) 4.5 V

Q.No. 10 The figure below shows a multiplexer where S_1 and S_0 are the select lines, I_0 to I_3 are the input data lines, EN is the enable line, and F (P, Q, R) is the output. F is

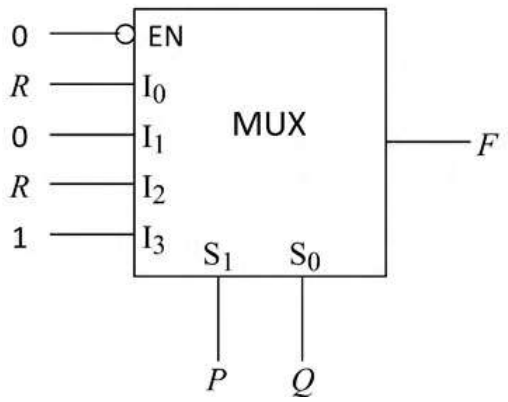

(A) $PQ + \bar{Q}R.$

(B) $P + Q\bar{R}.$

(C) $P\bar{Q}R + \bar{P}Q.$

(D) $\bar{Q} + PR.$

Q.No. 11 The pole-zero map of a rational function $G(s)$ is shown below. When the closed contour Γ is mapped into the $G(s)$-plane, then the mapping encircles

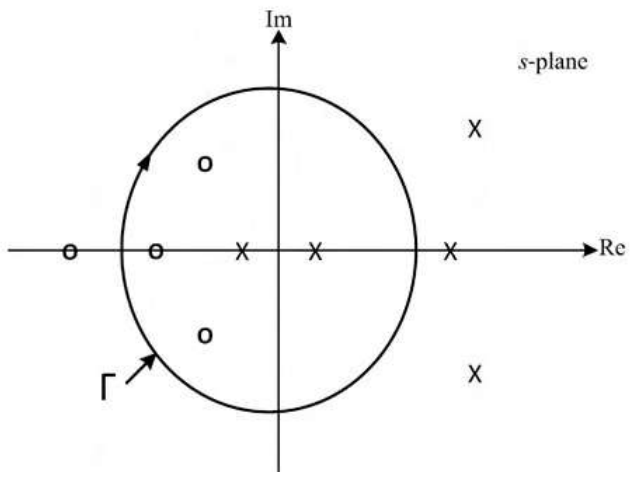

(A) the origin of the $G(s)$-plane once in the counter-clockwise direction.

(B) the origin of the $G(s)$-plane once in the clockwise direction.

(C) the point $-1 + j0$ of the $G(s)$-plane once in the counter-clockwise direction.

(D) the point $-1 + j0$ of the $G(s)$-plane once in the clockwise direction.

Q.No. 12 A digital communication system transmits a block of N bits. The probability of error in decoding a bit is α. The error event of each bit is independent of the error events of the other bits. The received block is declared erroneous if at least one of its bits is decoded wrongly. The probability that the received block is erroneous is

(A) $N(1-\alpha)$

(B) α^N

(C) $1-\alpha^N$

(D) $1-(1-\alpha)^N$

Q.No. 13 The impedances $Z = jX$, for all X in the range $(-\infty, \infty)$, map to the Smith chart as

(A) a circle of radius 1 with centre at (0, 0).

(B) a point at the centre of the chart.

(C) a line passing through the centre of the chart.

(D) a circle of radius 0.5 with centre at (0.5, 0).

Q.No. 14 Which one of the following pole-zero plots corresponds to the transfer function of an LTI system characterized by the input-output difference equation given below?

$$y[n] = \sum_{k=0}^{3} (-1)^k x[n-k]$$

(A)

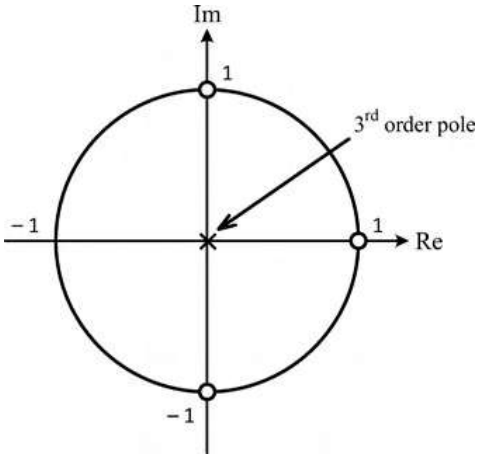

(B)

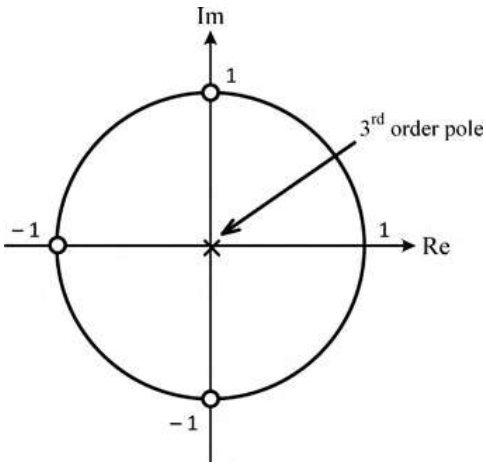

(C)

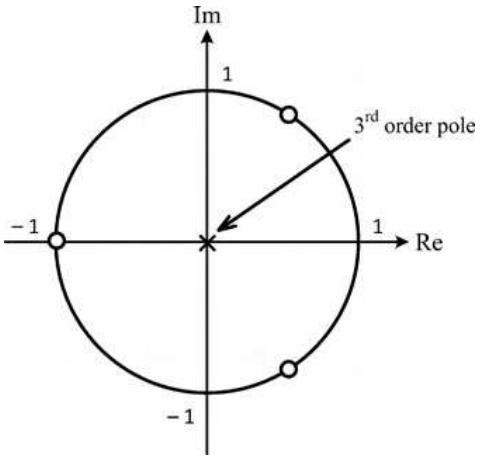

(D)

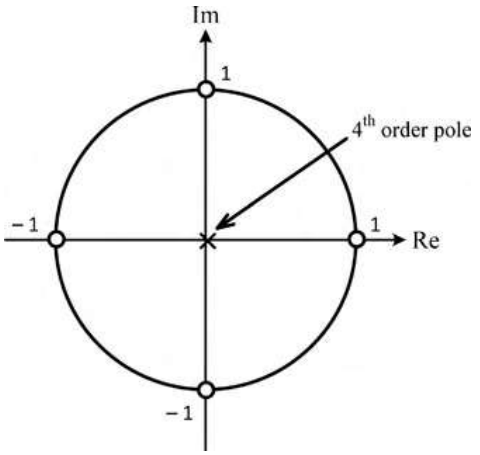

Q.No. 15 In the given circuit, the two-port network has the impedance matrix $[Z] = \begin{bmatrix} 40 & 60 \\ 60 & 120 \end{bmatrix}$. The value of Z_L for which maximum power is transferred to the load is _____ Ω.

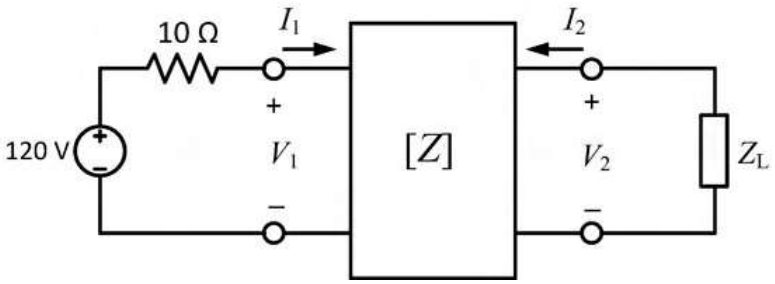

Q.No. 16 The current in the RL-circuit shown below is $i(t) = 10\cos(5t - \pi/4)$ A.

The value of the inductor **(rounded off to two decimal places)** is _____ H.

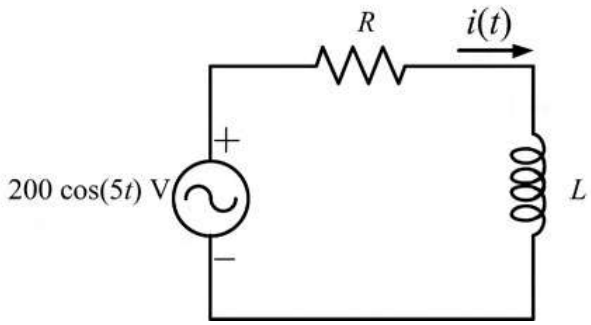

Q.No. 17

In the circuit shown below, all the components are ideal and the input voltage is sinusoidal. The magnitude of the steady-state output V_o **(rounded off to two decimal places)** is _____ V.

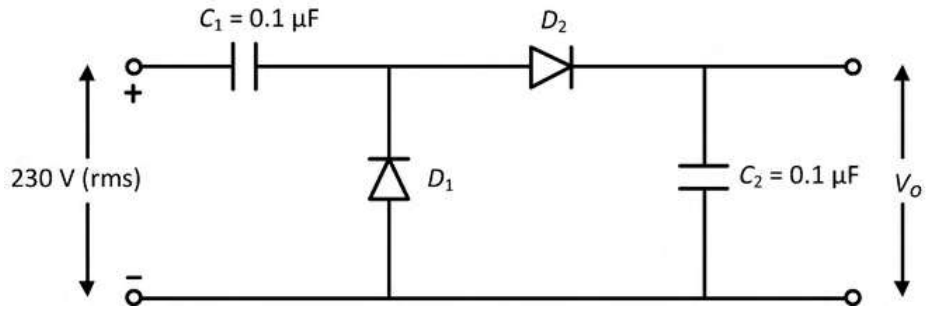

Q.No. 18 In the circuit shown below, all the components are ideal. If V_i is +2 V, the current I_o sourced by the op-amp is _____ mA.

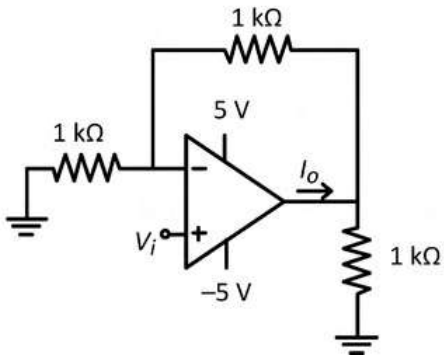

Q.No. 19 In an 8085 microprocessor, the number of address lines required to access a 16 K byte memory bank is _____ .

Q.No. 20 A 10-bit D/A converter is calibrated over the full range from 0 to 10 V. If the input to the D/A converter is 13A (in hex), the output **(rounded off to three decimal places)** is _____ V.

Q.No. 21 A transmission line of length 3λ/4 and having a characteristic impedance of 50 Ω is terminated with a load of 400 Ω. The impedance **(rounded off to two decimal places)** seen at the input end of the transmission line is _____ Ω.

Q.No. 22 A binary random variable X takes the value +2 or −2. The probability $P(X = +2) = \alpha$. The value of α **(rounded off to one decimal place)**, for which the entropy of X is maximum, is _____.

Q.No. 23 The loop transfer function of a negative feedback system is

$$G(s)H(s) = \frac{K(s+11)}{s(s+2)(s+8)}.$$

The value of K, for which the system is marginally stable, is _____.

Q.No. 24

The random variable

$$Y = \int_{-\infty}^{\infty} W(t)\phi(t)dt, \quad \text{where} \quad \phi(t) = \begin{cases} 1; & 5 \le t \le 7 \\ 0; & \text{otherwise} \end{cases}$$

and $W(t)$ is a real white Gaussian noise process with two-sided power spectral density $S_W(f) = 3$ W/Hz, for all f. The variance of Y is _____.

Q.No. 25 The two sides of a *fair* coin are labelled as 0 and 1. The coin is tossed two times independently. Let M and N denote the labels corresponding to the outcomes of those tosses. For a random variable X, defined as $X = \min(M, N)$, the expected value $E(X)$ **(rounded off to two decimal places)** is _____.

Q26 - Q55 carry two marks each.

Q.No. 26 Consider the following system of linear equations.

$$x_1 + 2x_2 = b_1 \;; \quad 2x_1 + 4x_2 = b_2 \;; \quad 3x_1 + 7x_2 = b_3 \;; \quad 3x_1 + 9x_2 = b_4$$

Which one of the following conditions ensures that a solution exists for the above system?

(A) $b_2 = 2b_1$ and $6b_1 - 3b_3 + b_4 = 0$

(B) $b_3 = 2b_1$ and $6b_1 - 3b_3 + b_4 = 0$

(C) $b_2 = 2b_1$ and $3b_1 - 6b_3 + b_4 = 0$

(D) $b_3 = 2b_1$ and $3b_1 - 6b_3 + b_4 = 0$

Q.No. 27 Which one of the following options contains two solutions of the differential equation $\frac{dy}{dx} = (y-1)x$?

(A) $\ln|y-1| = 0.5x^2 + C$ and $y = 1$

(B) $\ln|y-1| = 2x^2 + C$ and $y = 1$

(C) $\ln|y-1| = 0.5x^2 + C$ and $y = -1$

(D) $\ln|y-1| = 2x^2 + C$ and $y = -1$

Q.No. 28 The current I in the given network is

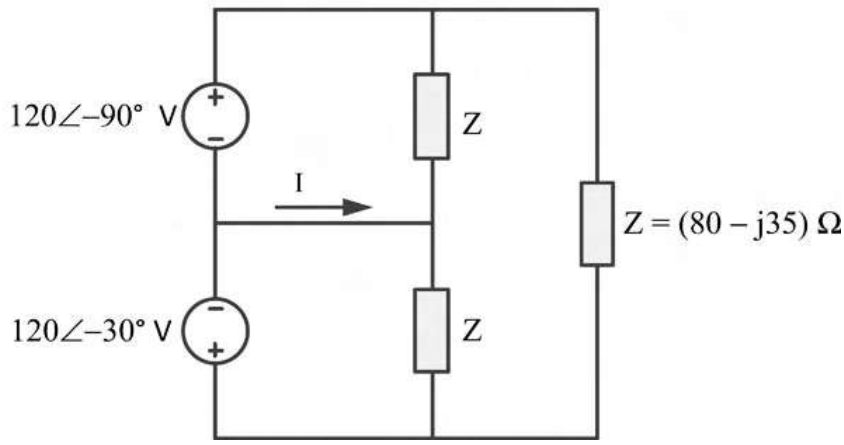

(A) 0 A.

(B) $2.38\angle -96.37^{\circ}$ A.

(C) $2.38\angle 143.63^{\circ}$ A.

(D) $2.38\angle -23.63^{\circ}$ A.

Q.No. 29 A finite duration discrete-time signal $x[n]$ is obtained by sampling the continuous-time signal $x(t) = \cos(200\pi t)$ at sampling instants $t = n/400$, $n = 0, 1, \cdots, 7$. The 8-point discrete Fourier transform (DFT) of $x[n]$ is defined as

$$X[k] = \sum_{n=0}^{7} x[n] e^{-j\frac{\pi k n}{4}}, \qquad k = 0, 1, \cdots, 7.$$

Which one of the following statements is TRUE?

(A) All $X[k]$ are non-zero.

(B) Only $X[4]$ is non-zero.

(C) Only $X[2]$ and $X[6]$ are non-zero.

(D) Only $X[3]$ and $X[5]$ are non-zero.

Q.No. 30 For the given circuit, which one of the following is the correct state equation?

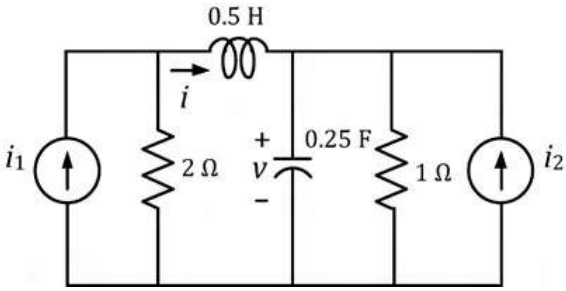

(A) $\frac{d}{dt}\begin{bmatrix} v \\ i \end{bmatrix} = \begin{bmatrix} -4 & 4 \\ -2 & -4 \end{bmatrix}\begin{bmatrix} v \\ i \end{bmatrix} + \begin{bmatrix} 0 & 4 \\ 4 & 0 \end{bmatrix}\begin{bmatrix} i_1 \\ i_2 \end{bmatrix}$

(B) $\frac{d}{dt}\begin{bmatrix} v \\ i \end{bmatrix} = \begin{bmatrix} -4 & -4 \\ -2 & 4 \end{bmatrix}\begin{bmatrix} v \\ i \end{bmatrix} + \begin{bmatrix} 4 & 4 \\ 4 & 0 \end{bmatrix}\begin{bmatrix} i_1 \\ i_2 \end{bmatrix}$

(C) $\frac{d}{dt}\begin{bmatrix} v \\ i \end{bmatrix} = \begin{bmatrix} 4 & -4 \\ -2 & -4 \end{bmatrix}\begin{bmatrix} v \\ i \end{bmatrix} + \begin{bmatrix} 0 & 4 \\ 4 & 4 \end{bmatrix}\begin{bmatrix} i_1 \\ i_2 \end{bmatrix}$

(D) $\frac{d}{dt}\begin{bmatrix} v \\ i \end{bmatrix} = \begin{bmatrix} -4 & -4 \\ -2 & -4 \end{bmatrix}\begin{bmatrix} v \\ i \end{bmatrix} + \begin{bmatrix} 4 & 0 \\ 0 & 4 \end{bmatrix}\begin{bmatrix} i_1 \\ i_2 \end{bmatrix}$

Q.No. 31 A one-sided abrupt *pn* junction diode has a depletion capacitance C_D of 50 pF at a reverse bias of 0.2 V. The plot of $1/C_D^2$ versus the applied voltage V for this diode is a straight line as shown in the figure below. The slope of the plot is _____ $\times\ 10^{20}\ \mathrm{F}^{-2}\mathrm{V}^{-1}$.

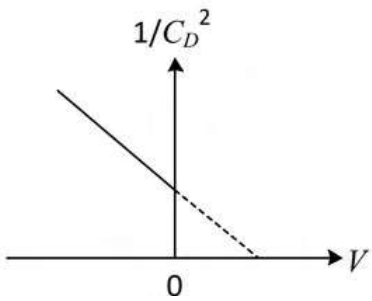

(A) -5.7

(B) -3.8

(C) -1.2

(D) -0.4

Q.No. 32 The band diagram of a p-type semiconductor with a band-gap of 1 eV is shown. Using this semiconductor, a MOS capacitor having V_{TH} of -0.16 V, C'_{ox} of $100\ \mathrm{nF/cm^2}$ and a metal work function of 3.87 eV is fabricated. There is no charge within the oxide. If the voltage across the capacitor is V_{TH}, the magnitude of depletion charge per unit area (in $\mathrm{C/cm^2}$) is

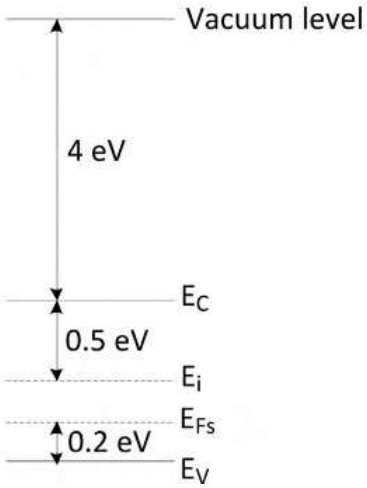

(A) 1.70×10^{-8}

(B) 0.52×10^{-8}

(C) 1.41×10^{-8}

(D) 0.93×10^{-8}

Q.No. 33 The base of an *npn* BJT T1 has a linear doping profile $N_B(x)$ as shown below. The base of another *npn* BJT T2 has a uniform doping N_B of 10^{17} cm^{-3}. All other parameters are identical for both the devices. Assuming that the hole density profile is the same as that of doping, the common-emitter current gain of T2 is

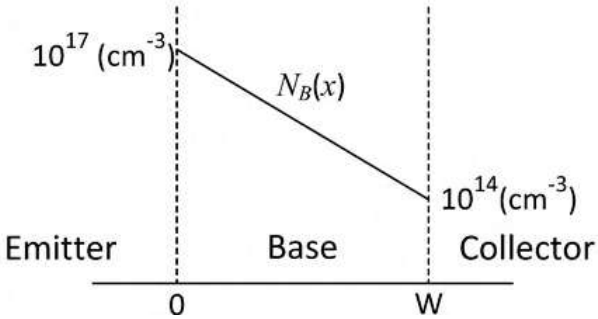

(A) approximately 2.0 times that of T1.

(B) approximately 0.3 times that of T1.

(C) approximately 2.5 times that of T1.

(D) approximately 0.7 times that of T1.

Q.No. 34 A *pn* junction solar cell of area 1.0 cm^2, illuminated uniformly with 100 mW cm^{-2}, has the following parameters: Efficiency = 15%, open circuit voltage = 0.7 V, fill factor = 0.8, and thickness = 200 μm. The charge of an electron is 1.6×10^{-19} C. The average optical generation rate (in cm^{-3}s^{-1}) is

(A) 0.84×10^{19}.

(B) 5.57×10^{19}.

(C) 1.04×10^{19}.

(D)

83.60×10^{19}.

Q.No. 35 For the BJT in the amplifier shown below, $V_{BE} = 0.7$ V, $kT/q = 26$ mV. Assume that BJT output resistance (r_o) is very high and the base current is negligible. The capacitors are also assumed to be short circuited at signal frequencies. The input v_i is direct coupled. The low frequency voltage gain v_o/v_i of the amplifier is

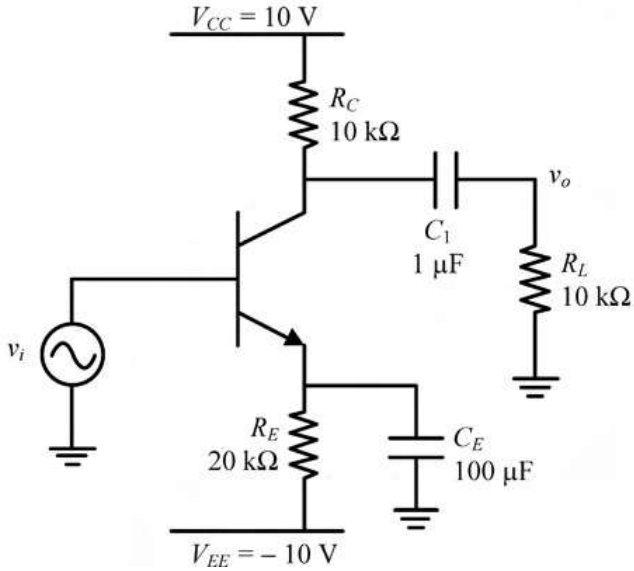

(A) – 89.42
(B) – 128.21
(C) – 178.85
(D) – 256.42

Q.No. 36 An enhancement MOSFET of threshold voltage 3 V is being used in the sample and hold circuit given below. Assume that the substrate of the MOS device is connected to -10 V. If the input voltage V_I lies between ± 10 V, the minimum and the maximum values of V_G required for proper sampling and holding respectively, are

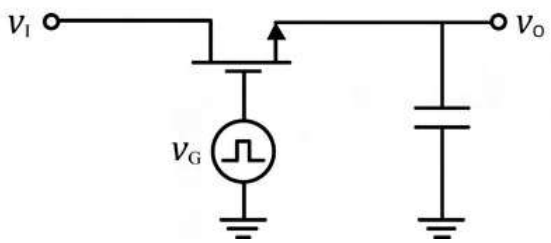

(A) 3 V and -3 V.
(B) 10 V and -10 V.
(C) 13 V and -7 V.
(D) 10 V and -13 V.

Q.No. 37

Using the incremental low frequency small-signal model of the MOS device, the Norton equivalent resistance of the following circuit is

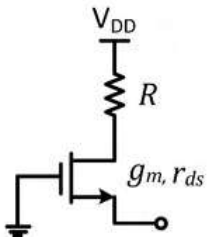

(A) $r_{ds} + R + g_m r_{ds} R$

(B) $\dfrac{r_{ds} + R}{1 + g_m r_{ds}}$

(C) $r_{ds} + \dfrac{1}{g_m} + R$

(D) $r_{ds} + R$

Q.No. 38 P, Q, and R are the decimal integers corresponding to the 4-bit binary number 1100 considered in signed magnitude, 1's complement, and 2's complement representations, respectively. The 6-bit 2's complement representation of (P + Q + R) is

(A) 110101

(B) 110010

(C) 111101

(D) 111001

Q.No. 39 The state diagram of a sequence detector is shown below. State S_0 is the initial state of the sequence detector. If the output is 1, then

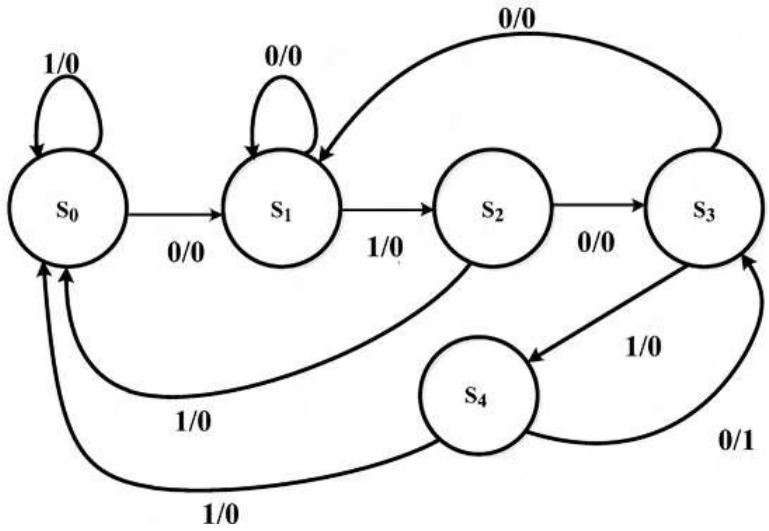

(A) the sequence 01010 is detected.

(B) the sequence 01011 is detected.

(C) the sequence 01110 is detected.

(D) the sequence 01001 is detected.

Q.No. 40

The characteristic equation of a system is

$$s^3 + 3s^2 + (K+2)s + 3K = 0.$$

In the root locus plot for the given system, as K varies from 0 to ∞, the break-away or break-in point(s) lie within

(A) $(-1, 0)$.

(B) $(-2, -1)$.

(C) $(-3, -2)$.

(D) $(-\infty, -3)$.

Q.No. 41 The components in the circuit given below are ideal. If $R = 2\ \text{k}\Omega$ and $C = 1\ \mu\text{F}$, the -3 dB cut-off frequency of the circuit in Hz is

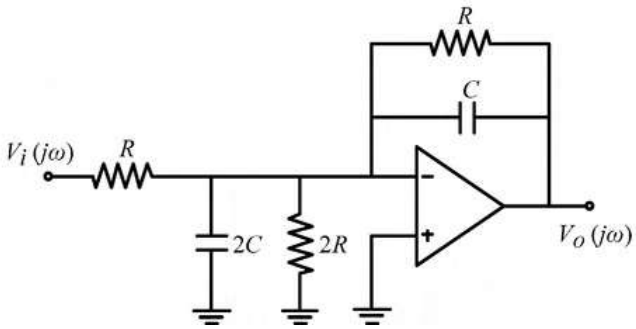

(A) 14.92

(B) 34.46

(C) 59.68

(D) 79.58

Q.No. 42 For the modulated signal $x(t) = m(t)\cos(2\pi f_c t)$, the message signal $m(t) = 4\cos(1000\pi t)$ and the carrier frequency f_c is 1 MHz. The signal $x(t)$ is passed through a demodulator, as shown in the figure below. The output $y(t)$ of the demodulator is

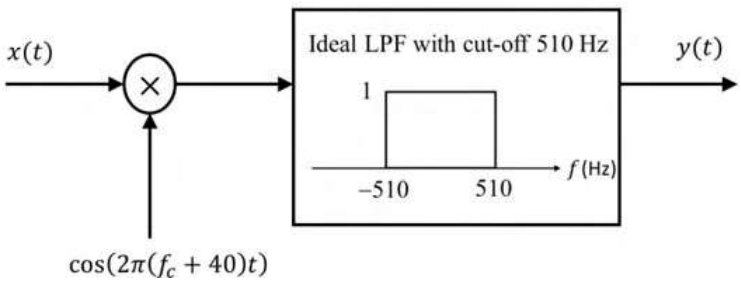

(A) $\cos(460\pi t)$.

(B) $\cos(920\pi t)$.

(C) $\cos(1000\pi t)$.

(D) $\cos(540\pi t)$.

Q.No. 43

For an infinitesimally small dipole in free space, the electric field E_θ in the far field is proportional to $(e^{-jkr}/r)\sin\theta$, where $k = 2\pi/\lambda$. A vertical infinitesimally small electric dipole ($\delta l \ll \lambda$) is placed at a distance h ($h > 0$) above an infinite ideal conducting plane, as shown in the figure. The minimum value of h, for which one of the maxima in the far field radiation pattern occurs at $\theta = 60°$, is

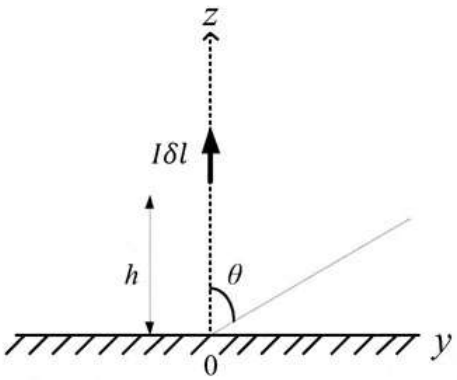

Infinite conducting plane

(A) λ

(B) 0.5λ

(C) 0.25λ

(D) 0.75λ

Q.No. 44 In the voltage regulator shown below, V_I is the unregulated input at 15 V. Assume $V_{BE} = 0.7$ V and the base current is negligible for both the BJTs. If the regulated output V_O is 9 V, the value of R_2 is _____ Ω.

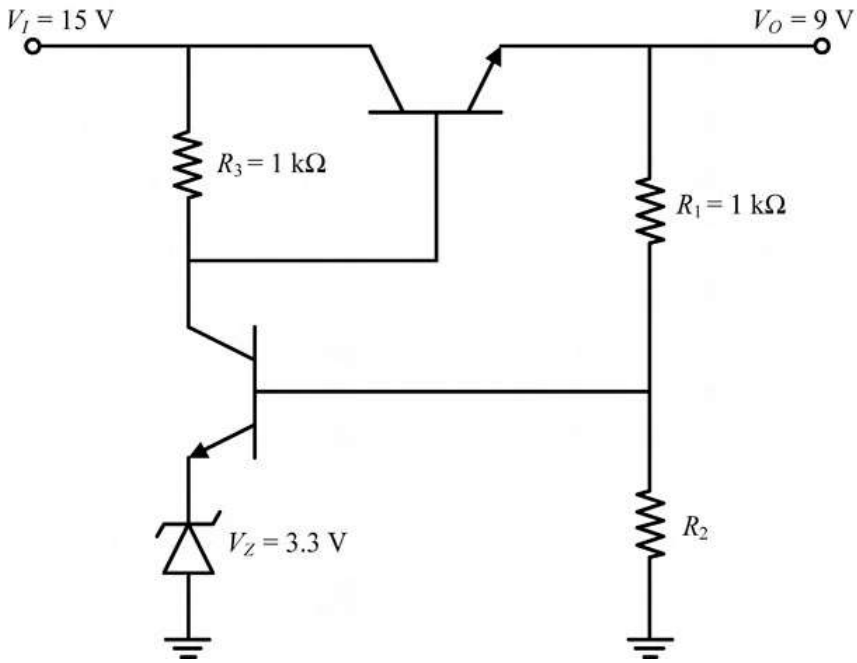

Q.No. 45 The magnetic field of a uniform plane wave in vacuum is given by

$$\vec{H}(x,y,z,t) = (\hat{a}_x + 2\hat{a}_y + b\hat{a}_z)\cos(\omega t + 3x - y - z).$$

The value of b is _____.

Q.No. 46 For a 2-port network consisting of an ideal lossless transformer, the parameter S_{21} **(rounded off to two decimal places)** for a reference impedance of 10 Ω, is _____.

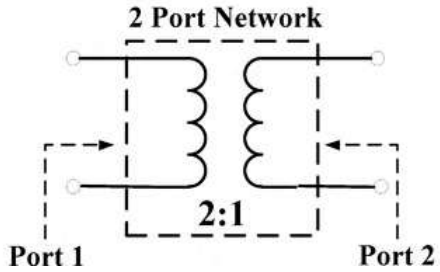

Q.No. 47 $S_{PM}(t)$ and $S_{FM}(t)$ as defined below, are the phase modulated and the frequency modulated waveforms, respectively, corresponding to the message signal $m(t)$ shown in the figure.

$$S_{PM}(t) = \cos\left(1000\pi t + K_p m(t)\right)$$

$$\text{and } S_{FM}(t) = \cos\left(1000\pi t + K_f \int_{-\infty}^{t} m(\tau)d\tau\right)$$

where K_p is the phase deviation constant in radians/volt and K_f is the frequency deviation constant in radians/second/volt. If the highest instantaneous frequencies of $S_{PM}(t)$ and $S_{FM}(t)$ are same, then the value of the ratio $\frac{K_p}{K_f}$ is _____ seconds.

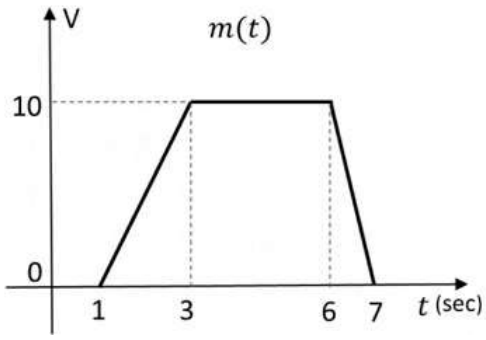

Q.No. 48 In a digital communication system, a symbol S randomly chosen from the set $\{s_1, s_2, s_3, s_4\}$ is transmitted. It is given that $s_1 = -3, s_2 = -1, s_3 = +1$ and $s_4 = +2$. The received symbol is $Y = S + W$. W is a zero-mean unit-variance Gaussian random variable and is independent of S. P_i is the conditional probability of symbol error for the maximum likelihood (ML) decoding when the transmitted symbol $S = s_i$. The index i for which the conditional symbol error probability P_i is the highest is _____.

Q.No. 49

A system with transfer function $G(s)=\dfrac{1}{(s+1)(s+a)}$, $a>0$ is subjected to an input $5\cos 3t$. The steady state output of the system is $\dfrac{1}{\sqrt{10}}\cos(3t-1.892)$. The value of a is _____.

Q.No. 50 For the components in the sequential circuit shown below, t_{pd} is the propagation delay, t_{setup} is the setup time, and t_{hold} is the hold time. The maximum clock frequency **(rounded off to the nearest integer)**, at which the given circuit can operate reliably, is _____ MHz.

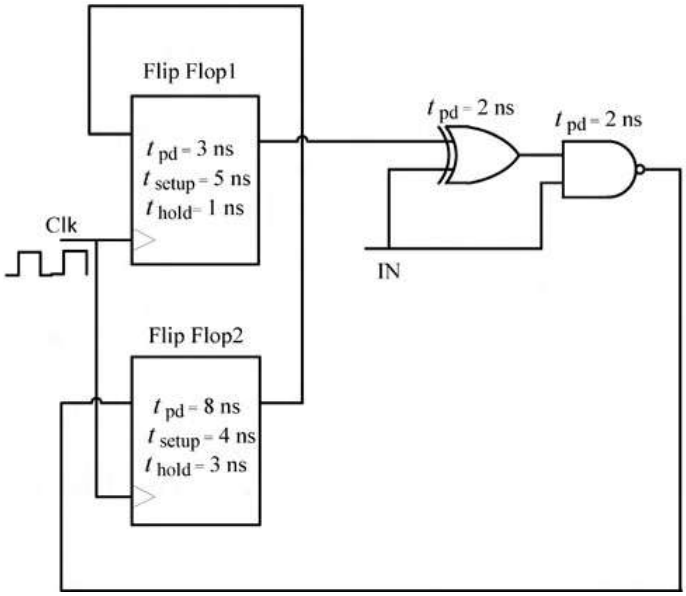

Q.No. 51 For the solid S shown below, the value of $\iiint_S x\,dx\,dy\,dz$ **(rounded off to two decimal places)** is _____ .

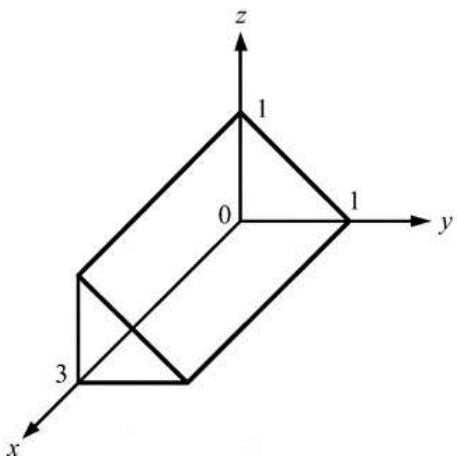

Q.No. 52

$X(\omega)$ is the Fourier transform of $x(t)$ shown below. The value of $\int_{-\infty}^{\infty}|X(\omega)|^2\ d\omega$ **(rounded off to two decimal places)** is _____ .

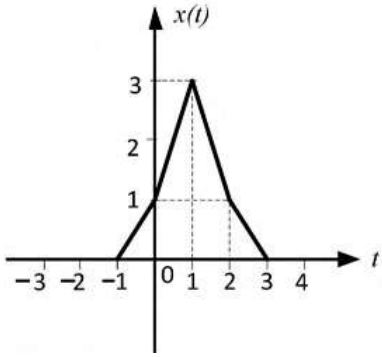

Q.No. 53 The transfer function of a stable discrete-time LTI system is $H(z) = \frac{K\,(z-\alpha)}{z+0.5}$, where K and α are real numbers. The value of α **(rounded off to one decimal place)** with $|\alpha| > 1$, for which the magnitude response of the system is constant over all frequencies, is _____.

Q.No. 54 X is a random variable with uniform probability density function in the interval $[-2, 10]$. For $Y = 2X - 6$, the conditional probability $P(Y \leq 7|X \geq 5)$ **(rounded off to three decimal places)** is _____.

Q.No. 55 Consider the following closed loop control system

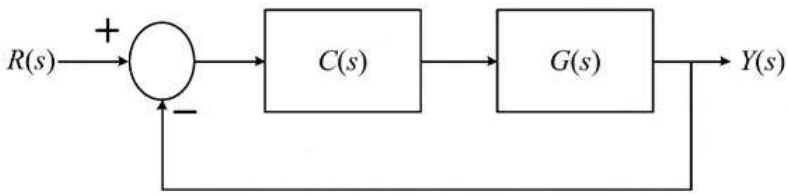

where $G(s) = \frac{1}{s(s+1)}$ and $C(s) = K\frac{s+1}{s+3}$. If the steady state error for a unit ramp input is 0.1, then the value of K is _____.

Copyright : GATE 2020, IIT Delhi

GATE 2020

Graduate Aptitude Test in Engineering 2020

IIT Delhi

Organising Institute

Answer Key - EC: Electronics and Communication Engg.

Q.No.	Session	Que.Type	Sec. Name	Key	Marks
1	4	MCQ	GA	A	1
2	4	MCQ	GA	B	1
3	4	MCQ	GA	B	1
4	4	MCQ	GA	C	1
5	4	MCQ	GA	A	1
6	4	MCQ	GA	A	2
7	4	MCQ	GA	B	2
8	4	MCQ	GA	C	2
9	4	MCQ	GA	C	2
10	4	MCQ	GA	B	2
1	4	MCQ	EC	C	1
2	4	MCQ	EC	C	1
3	4	MCQ	EC	B	1
4	4	MCQ	EC	C	1
5	4	MCQ	EC	C	1
6	4	MCQ	EC	B	1
7	4	MCQ	EC	B	1
8	4	MCQ	EC	D	1
9	4	MCQ	EC	C	1
10	4	MCQ	EC	A	1
11	4	MCQ	EC	B	1
12	4	MCQ	EC	D	1
13	4	MCQ	EC	A	1
14	4	MCQ	EC	A	1
15	4	NAT	EC	48 to 48	1
16	4	NAT	EC	2.80 to 2.85	1
17	4	NAT	EC	644 to 657	1
18	4	NAT	EC	6 to 6	1
19	4	NAT	EC	14 to 14	1
20	4	NAT	EC	3.050 to 3.080	1
21	4	NAT	EC	6.25 to 6.25	1
22	4	NAT	EC	0.5 to 0.5	1
23	4	NAT	EC	160 to 160	1
24	4	NAT	EC	6 to 6	1
25	4	NAT	EC	0.25 to 0.25	1
26	4	MCQ	EC	A	2
27	4	MCQ	EC	A	2
28	4	MCQ	EC	C	2
29	4	MCQ	EC	C	2
30	4	MCQ	EC	A	2
31	4	MCQ	EC	MTA	2
32	4	MCQ	EC	A	2
33	4	MCQ	EC	MTA	2

34	4	MCQ	EC	A	2
35	4	MCQ	EC	A	2
36	4	MCQ	EC	C	2
37	4	MCQ	EC	B	2
38	4	MCQ	EC	A	2
39	4	MCQ	EC	A	2
40	4	MCQ	EC	A	2
41	4	MCQ	EC	D	2
42	4	MCQ	EC	B	2
43	4	MCQ	EC	A	2
44	4	NAT	EC	800 to 800	2
45	4	NAT	EC	1 to 1	2
46	4	NAT	EC	0.8 to 0.8	2
47	4	NAT	EC	2 to 2	2
48	4	NAT	EC	3 to 3	2
49	4	NAT	EC	3.95 to 4.05	2
50	4	NAT	EC	76 to 77	2
51	4	NAT	EC	2.25 to 2.25	2
52	4	NAT	EC	58.50 to 58.80	2
53	4	NAT	EC	-2 to -2	2
54	4	NAT	EC	0.299 to 0.301	2
55	4	NAT	EC	30 to 30	2

Copyright : GATE 2020, IIT Delhi